BOSCH

BOSCH SPARE PARTS CATALOGUE

Effect From 1st April 2024

Spark.NXT

SERVICE

Bosch Hai to BEST Hai

BOSCH

WARRANTY CARD

SERVICE

Congratulations on purchasing Power Tools from Bosch, which are designed and manufactured with High quality, Reliability and Safety standards.
Power Tools from Bosch are guaranteed against material and manufacturing defects for a period of one year starting from the date of purchase as recorded in the invoice of purchase document.

1 YEAR WARRANTY

HEAVY DUTY Bosch HD*

Measuring Tools*

Professional Tools*

Production Tools**

*https://www.bosch-pt.co.in/in/en/professional-power-tools-131398-ocs-c/
**https://www.bosch-pt.co.in/in/en/production-tools-2478864-ocs-c/

In the event of failure of tools due to material & manufacturing defects, we undertake to repair the tools (with repairable parts) free of charge, provided we are satisfied that:

- The power tool has not been tampered with.
- Failure has occurred due to manufacturing/material defect.
- The power tool has been purchased from an accredited dealer/retailer/online portal.
- The claim has been referred to one of the Bosch Authorized Service Centers along with the power tool, warranty card and original tool purchase valid invoice with GST number.
- The customer shall carry the tools to the nearest Authorized Service Center at his/her own cost and risk.
- The Bosch Tool shall be used strictly for intended purpose in accordance with the user manual.

6082942B2N

Bosch Limited,
Post Box No. 3000, Hosur Road, Adugodi, Bangalore - 560030. Toll Free No: 1800 4258 665

BOSCH

This warranty does not cover

- All normal wear and tear parts like carbon brush, bearings, O-rings, Oil seals, mechanical parts, trigger, pump unit, plastic parts, heating element & accessories etc.
- Installation to wrong voltage, overload, wrong accessories and wrong application.
- Use other than in accordance to handling instructions.
- Unauthorized repair carried out.
- Damage due to any unit caused by accident, misuse, willful damage, and normal wear, claims arising from loss, fire or other calamities caused by nature or in any way being tampered with.
- Intermittent duty tool used for production purpose.
- Use of spurious spares and look alike & non-genuine spares.
- Failure to comply with any safety precaution or maintenance tip suggested in user manual.
- Original serial number is deleted/defected/defaced or altered or tamperproof seal is damaged.
- Calibration of tools is not covered under warranty.

Tool Model Name:	Tool Serial number:	GST invoice number:

Dealer Seal	Signature	Purchase Date

SERVICE

BeConnected

SCAN for Warranty Registration

SCAN to Know the nearest Authorized Service Centre

BOSCH SPARE PARTS CATALOGUE Effective April 2024

S No.	Product Category	Model Name	Bare Tool Part No.	Page No
1	Mini Angle Grinders	GWS 600	06013750X5	1
2		GWS 750-100	3601C940F0	3
3		GWS 800	3601C943F0	5
4		GWS 900-100	3601C960F0	7
5		GWS 6-125	06013751X2	9
6		GWS 900-125	3601C960F2	11
7		GWS 10-125	3601H212F1	13
8		GWS 12-125 S	3601CA60F2	15
9		GWS 14-125 CI	3601H242F2	17
10		GWS 18-125L	3601GA30K0	19
11	Concrete Grinder	GBR 15 CAG	3601G760F0	21
12	Polisher	GPO 12 CE	3601C890K0	23
13	Large Angle Grinders	GWS 2000-180	3601HB70F0	25
14		GWS 2200-180	3601HC00F0	28
15		GWS 2200-230	3601HC10F0	30
16		GWS 24-180	06018534X0	32
17		GWS 24-180	3601HC20F0	34
18		GWS 24-180 JZ	3601HC23F0	36
19		GWS 24-230	3601HC30F0	38
20		GWS 24-230 JZ	3601HC33F0	40
21		GWS 26-180 H	3601H55100	42
22		GWS 30 B - 180	3601HG00F0	44
23		GWS 30 B - 230	3601HG10F0	46
24	Chop Saw	GCO 220 New	3601M373F0	48
25		GCO 14-24	3601M371F0	50
26		GCO 230	3601M560F0	52
27	Rotary Drills	GBM 6	3601D720F1	54
28		GBM 10 RE	3601D735F1	55
29		GBM 13 RE	3601D775F1	56
30		GBM 350	3601AA95F2	57
31		GBM 50-2	3601AB40F0	58
32	Impact Drills	GSB 10 RE	3601B161F4	61
33		GSB 13 RE	3601B171F3	62
34		GSB 450	3601B161FA	63
35		GSB 451	3601B160K4	
36		GSB 500 RE	3601B161F6	64
37		GSB 501	3601B161F8	65
38		GSB 550	3601AA15L1	66
39		GSB 600	3601AA03F0	68
40	Rotary Hammers	GBH 200	3611B583F3	70
41		GBH 220	3611BA60F0	72
42		GBH 2-22 RE	06112507X0	74
43		GBH 2-26 E	06112516X0	76
44		GBH 2-26 DRE	06112537X0	78
45		GBH 2-28 DV	3611B671F0	80
46		GBH 4-32 DFR	3611C321K5	82
47		GBH 5-40 D	3611B690K0	85
48		GBH 8-45 DV	3611B650K0	88

S No.	Product Category	Model Name	Bare Tool Part No.	Page No
49	Demolition Hammers	GSH 5	3611C370F0	91
50		GSH 500 HEX	3611C386F0	93
51		GSH 500 SDS MAX	3611C387F0	95
52		GSH 11 E New	3611C168F0	97
53		GSH 11VC	3611C360K0	99
54		GSH 14 C	3611C440F0	101
55		GSH 16-30	3611C351K0	104
56	Diamond/Stone Cutter	GDC 120	3601C930F1	107
57		GDC 121	3601C931F1	109
58		GDC 140	3601CA40F1	111
59		GDC 141	3601CA41F0	113
60	Heat guns, Blowers	GHG 180	3601J4D0F0	115
61		GHG 20-60	3601BA6400	116
62		GHG 20-63	3601BA62K0	117
63		GBL 620	3601J805F0	118
64		GBL 650	3601JM40F0	119
65		GBL 800E	3601J804F4	120
66		GBL 82-270	3601J804F7	122
67	Planers	GHO 6500	3601E960K0	124
68		GHO 10-82	0601594060	126
69		GHO 26-82D	3601EA4370	128
70	Circular Saws	GKS 140	3601FB30F0	130
71		GKS190	3601F230K0	132
72		GKS 235 Turbo	3601EA20F0	134
73		GKS7000	3601F760F0	136
74	Orbital Sander	GSS 2300	3601B9B0F0	137
75		GSS 140	3601BA80F0	138
76	Random Orbital Sanders	GEX 125	3601CA80F0	139
77		GEX 125-1 AE	3601C875K0	140
78		GEX 150 AC	0601372750	141
79		GEX 34-150	3601C728F0	143
80	Jigsaws	GST 650	3601EA80F0	144
81		GST 680	3601EB40F0	145
82		GST 700	3601BA70F0	147
83		GST 90 BE	3601E8F0F0	150
84	Routers	GKF 550	3601FA00F1	152
85		GOF 130	3601FB70F0	155
86		POF 1400 ACE	3603B6C701	157
87	Screw Driver	GTB 650	3601DA20F0	158
88	Vacuum cleaners	GAS 12-25	3601J7C0F0	159
89		GAS 15PS	3601JE51F0	164
90		GAS 35 L SFC	3601JC30F0	169
91		GAS 55 M AFC	3601JC33F0	175
92	Straight Grinder	GGS 28 LCE	3601B21100	181
93		GGS 3000 L	3601B240K0	183
94		GGS 5000L	3601B241K0	184
95		GGS 30 LS	3601BB50F0	185
96	Impact Wrench/Wrench	GDS 18 E	3601D44000	187
97		GDS 30	0601435103	189

S No.	Product Category	Model Name	Bare Tool Part No.	Page No
98	BT Miter Saws	GCM 10 MX	3601M290K0	191
99	Table Saw	GTS 254	3601M450F0	194
100	Wall Sander	GTR 550	3601GD40F0	201
101	Speciality Tools	GAC 250	3601BB60F0	205
102		GRW 140	3601AC40F0	207
103	Saber Saw	GSA 120	3601FB10F0	209
104		GSA 1300PCE	3601F4E2K0	210
105	High Pressure Cleaner	GHP 5-13 C	3600J100F0	212
106		GHP 5-75 X	3600J108F0	215
107		Easy Aquatak 100	3600HA7EF0	220
108		UniversalAquatak 125	3600HA7AF0	223
109		UniversalAquatak 130	3600HA7BK0	226
110		UniversalAquatak 135	3600HA7CF0	229
111		Advanced Aquatak 140	3600HA7DF0	232
112		AdvancedAquatak 150	3600HA77F0	236
113		AdvancedAquatak 160	3600HA78F0	240
114	Cordless Tools	GAS 18V-1	3601JC62L0	244
115		GBL 18V-120	3601JF51L0	246
116		GSR 120 LI New	3601JG8080	247
117		GSR 180-LI	3601JF81K0	248
118		GSR 185 Li	3601JK3080	249
119		Bosch Go 3.0	3601JH2280	250
120		GSB 180 Li	3601JF83K0	251
121		GSB 183 Li	3601JK91F0	252
122		GDS 250-Li	3601JG61K0	253
123		GDS 18 V-EC 250	3601JD81F0	255
124		GDS 18V-200	3601JJ2380	257
125		GDS 18V-1050	3601JJ85L0	259
126		GDS 18V-400	3601JK0080	260
127		GDS 18V-1600 HC	3601JM1080	262
128		GBH 180-LI	3611J110K0	263
129		GBH 18V-34 CF	3611J14080	265
130		Pro Pruner	3601JK10L0	268
131		GWS 180 LI	3601JH90K0	270
132		GWS 18V-10	3601JJ40K0	272
133		GWS 18V LI	3601J3A382	274

BOSCH Power Tools	Universal Angle Grinder	Model GWS 600 0 601 375 0X5 | BO

0 601 375 0X2
Stand } ~~20-01~~
Issue } 21-07-23

Fig. /Abb. 1

Gerad - Verzahnung

● Vor Demontage des Ankers Kohlebürsten 5mm zurückziehen !

Before the armature is removed the carbon brushes must be withdrawn by at least 5mm !

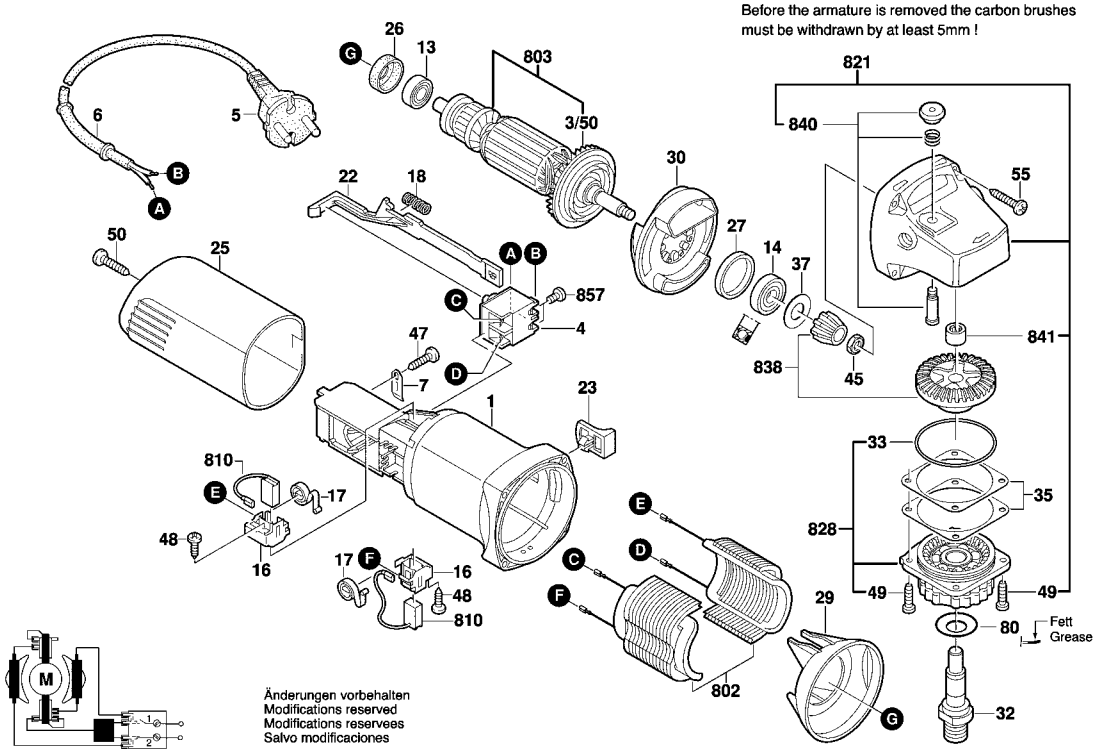

Model: 0 601 375 0X5 = 220 | Date:

Item	Pc	Order no.	Description	LP in INR
1	1	1 619 P09 772	Motor Housing .	132,00
3/50	1	1 606 610 141	Fan .	30,00
4	1	1 607 200 179	On-Off Switch .	128,00
5	1	1 604 460 72V	Power supply cord IND	112,00
6	1	F 002 G31 081	Grommet .	30,00
7	1	1 601 302 017	Fastening Clamp .	30,00
13	1	1 619 P11 239	groove ball bearing .	31,00
14	1	1 619 P11 240	groove ball bearing .	64,00
16	2	1 619 P01 811	Brush Holder .	30,00
17	2	1 604 652 013	Spiral Spring .	44,00
18	1	1 604 611 031	Compression Spring .	25,00
22	1	1 602 319 009	Adjusting Slide .	30,00
23	1	1 619 P02 762	Switch Button BLACK	30,00
25	1	1 605 500 194	Housing Cover .	75,00
26	1	1 600 502 023	Intermediate Ring .	68,00
27	1	1 600 206 025	Rubber Ring .	28,00
29	1	1 600 591 023	Air-Deflector Ring .	34,00
30	1	1 600 591 024	Air-Deflector Ring .	34,00
32	1	1 603 523 111	Grinding Spindle M10,	96,00
33	1	1 600 210 041	O-Ring 42,0x1,1 MM .	30,00
35	1	1 600 136 016	Shim 0,1 MM THICK	30,00
35	1	1 600 136 017	Shim 0,2 MM THICK	30,00
37	1	1 600 100 033	Cover Disc .	25,00
45	1	2 915 011 007	Hex Nut DIN 934-M6-8-A .	25,00

Item	Pc	Order no.	Description	LP in INR
47	1	2 609 110 052	Special Screw .	45,00
48	2	1 619 P00 220	Torx Oval-Head Screw	30,00
49	4	1 603 435 068	Thread-forming tap. Screw	43,00
50	1	2 910 611 020	Tapping Screw DIN	44,00
55	4	2 910 611 022	Tapping Screw DIN	30,00
80	1	1 619 P09 390	Cover Disc .	69,00
650/10	1	F 002 G30 042	Auxiliary Handle .	36,00
650/20	1	1 619 P09 976	Round Nut With 2 Holes .	52,00
650/30	1	1 600 A00 F93	Pin-Type Face-Wrench .	31,00
650/50	1	1 619 P12 159	Clamping-Flange	49,00
651	1	1 619 P10 088	Protective Cover .	
802	1	1 604 220 328	Field 220-240V .	358,00
803	1	1 604 010 626	Armature 220-240V .	503,00
810	1	1 607 014 145	Carbon-Brush Set .	91,00
821	1	1 605 806 466	Gear Housing .	424,00
828	1	1 605 805 090	Bearing Flange BLACK	177,00
838	1	1 600 A02 92J	Bevel Gear Set .	330,00
840	1	1 607 000 298	Push-Button BLACK	55,00
841	1	1 600 200 029	Plain bearing .	30,00
857	2	2 910 641 081	Oval-Head Screw	52,00
894	1	1 615 430 020	Grease Tube 225 ML .	1.467,00
895	1	1 605 430 003	Grease Tube 225 ML .	1.585,00

Please observe: Repairing, modifying and testing of electro-tools are to be performed professionally.The safety regulations according to IEC, EN, VDE, AFNOR and other regulations of the individual countries are to be observed. Subject to change.
This price list supersedes all previous edition. Prices are subjected to change without any prior notice.

0 601 375 0X2
Stand } ~~15-11~~
Issue } 20-01-31

Fig. /Abb. 2

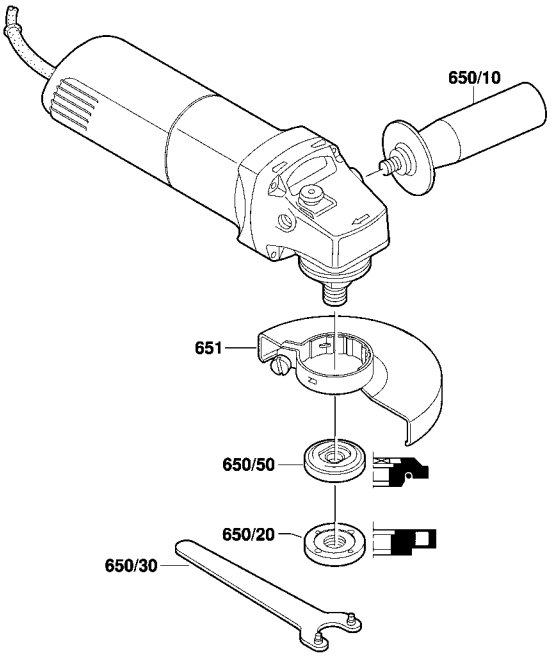

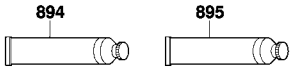

Änderungen vorbehalten
Modifications reserved
Modifications reservees
Salvo modificaciones

Model: 0 601 375 0X5 = 220	Date:

Item	Pc	Order no.	Description	LP in INR	Item	Pc	Order no.	Description	LP in INR

Please observe: Repairing, modifying and testing of electro-tools are to be performed professionally.The safety regulations according to IEC, EN, VDE, AFNOR and other regulations of the individual countries are to be observed. Subject to change.
This price list supersedes all previous edition. Prices are subjected to change without any prior notice.

BOSCH Power Tools	Angle Grinder	Model GWS 750-100 3 601 C94 0F0 | BO

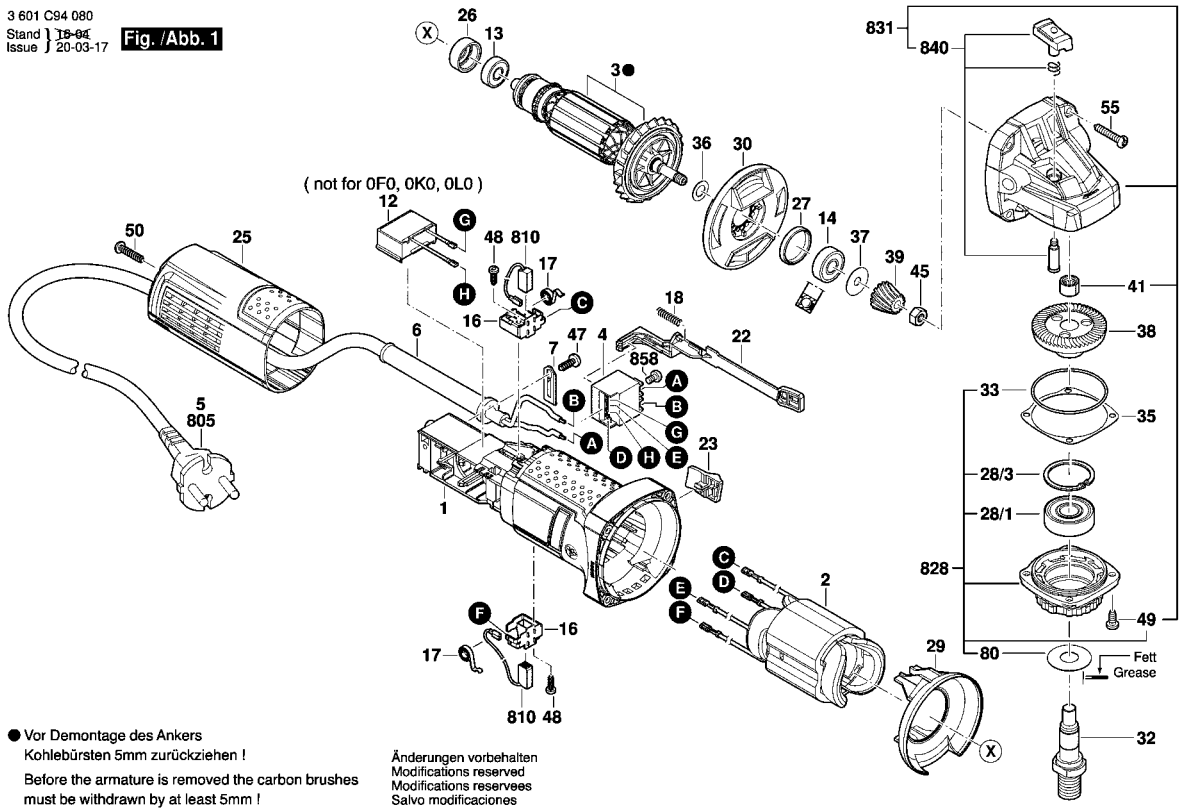

Model: 3 601 C94 0F0 = 230 | Date:

Item	Pc	Order no.	Description	LP in INR
1	1	1 619 P10 958	Motor Housing .	91,00
2	1	1 619 P08 334	Field .	346,00
3	1	1 619 P08 234	Armature .	549,00
4	1	1 607 200 31V	Switch .	70,00
6	1	2 600 703 012	Grommet Ø6,5-Ø6,9x95	25,00
7	1	1 601 302 017	Fastening Clamp .	30,00
13	1	1 619 P08 829	groove ball bearing .	210,00
14	1	1 619 P13 103	groove ball bearing .	173,00
16	2	1 619 P01 811	Brush Holder .	30,00
17	2	1 604 652 013	Spiral Spring .	44,00
18	1	1 619 P11 487	Compression Spring .	52,00
22	1	1 619 P10 967	Adjusting Slide .	52,00
23	1	1 619 P10 969	Switch Button .	48,00
23	1	1 619 P13 541	Switch Button .	39,00
25	1	1 619 P10 963	Housing Cover .	37,00
26	1	1 600 502 023	Intermediate Ring .	68,00
27	1	1 600 206 025	Rubber Ring .	28,00
28/1	1	1 619 P07 440	Ball Bearing .	212,00
28/3	1	2 916 660 013	Retaining clip DIN	48,00
29	1	1 619 P10 970	Air-Deflector Ring .	65,00
30	1	1 619 P14 139	Air Distributor .	58,00
32	1	1 603 523 111	Grinding Spindle M10,	96,00
33	1	1 619 P14 660	groove ball bearing .	63,00
35	1	1 619 P02 821	Shim 0,1 MM .	30,00

Item	Pc	Order no.	Description	LP in INR
35	1	1 619 P02 822	Shim 0,2 MM .	30,00
36	1	1 619 P00 987	Washer .	30,00
37	1	1 600 100 033	Cover Disc .	25,00
38	1	1 619 P02 823	Crown Gear .	108,00
39	1	1 619 P02 825	Bevel Gear .	62,00
41	1	1 600 200 029	Plain bearing .	30,00
45	1	2 915 011 007	Hex Nut DIN 934-M6-8-A .	25,00
47	1	2 609 110 052	Special Screw .	45,00
48	2	1 619 P00 220	Torx Oval-Head Screw	30,00
49	4	1 619 P12 666	Thread-forming tap. Screw	39,00
50	1	1 619 P00 105	Torx Oval-Head Screw	30,00
55	4	1 619 P01 066	Torx Oval-Head Screw	30,00
80	1	1 619 P09 390	Cover Disc .	69,00
650/1	1	1 602 025 09T	Auxiliary Handle .	109,00
650/2	1	1 619 P09 976	Round Nut With 2 Holes .	52,00
650/3	1	1 619 P08 928	Pin-Type Face-Wrench .	37,00
650/5	1	1 619 P12 159	Clamping-Flange	49,00
651	1	1 600 A00 XU5	Protective Cover Ø100 MM	123,00
805	1	1 607 000 387	Power supply cord CN	271,00
810	1	1 619 P11 715	Carbon-Brush Set .	153,00
828	1	1 619 P07 451	Bearing Flange .	447,00
831	1	1 619 P12 186	Gear Housing .	496,00
840	1	1 619 P12 188	Push Button .	82,00
858	2	2 910 641 081	Oval-Head Screw	52,00

Please observe: Repairing, modifying and testing of electro-tools are to be performed professionally.The safety regulations according to IEC, EN, VDE, AFNOR and other regulations of the individual countries are to be observed. Subject to change.
This price list supersedes all previous edition. Prices are subjected to change without any prior notice.

3 601 C94 080
Stand } ~~15-04~~
Issue } 16-06-27

Fig. /Abb. 2

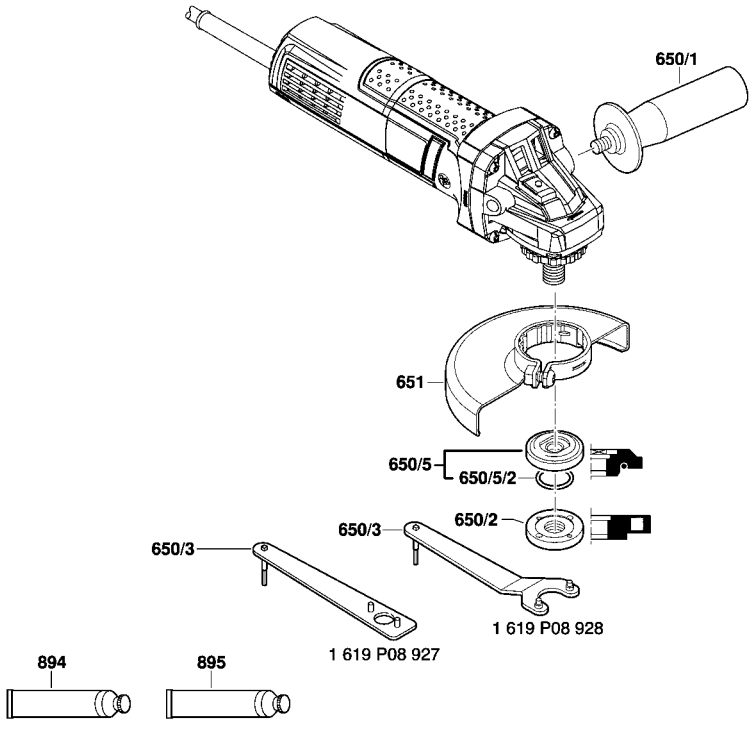

Änderungen vorbehalten
Modifications reserved
Modifications reservees
Salvo modificaciones

Model: 3 601 C94 0F0 = 230 | Date:

Item	Pc	Order no.	Description	LP in INR
894	1	1 615 430 020	Grease Tube 225 ML .	1.467,00
895	1	1 605 430 003	Grease Tube 225 ML .	1.585,00

Item	Pc	Order no.	Description	LP in INR

Please observe: Repairing, modifying and testing of electro-tools are to be performed professionally.The safety regulations according to IEC, EN, VDE, AFNOR and other regulations of the individual countries are to be observed. Subject to change.
This price list supersedes all previous edition. Prices are subjected to change without any prior notice.

BOSCH Power Tools	Angle Grinder	Model GWS 800 3 601 C94 3F0 | BO

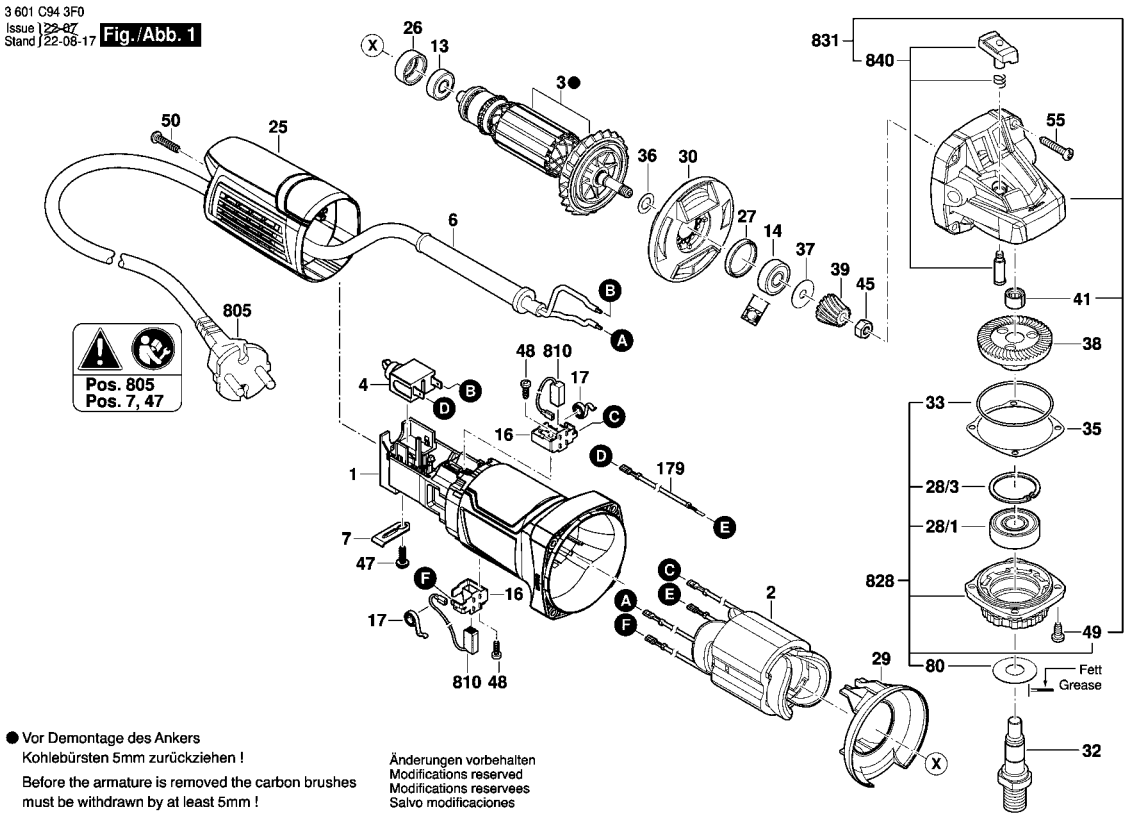

Model: 3 601 C94 3F0 = 230 | Date:

Item	Pc	Order no.	Description	LP in INR
1	1	1 619 P10 962	Motor Housing .	137,00
2	1	1 604 220 59E	Field .	346,00
3	1	1 604 010 BN7	Armature .	549,00
4	1	1 607 200 38G	Switch .	77,00
6	1	F 002 G31 081	Grommet .	30,00
7	1	1 601 302 017	Fastening Clamp .	30,00
13	1	1 619 P14 660	groove ball bearing .	63,00
14	1	1 619 P13 103	groove ball bearing .	173,00
16	2	1 619 P01 811	Brush Holder .	30,00
17	2	1 604 652 013	Spiral Spring .	44,00
25	1	1 619 P10 966	Housing Cover .	67,00
26	1	1 600 502 023	Intermediate Ring .	68,00
27	1	1 600 206 025	Rubber Ring .	28,00
28/1	1	1 619 P07 440	Ball Bearing .	212,00
28/3	1	2 916 660 013	Retaining clip DIN	48,00
29	1	1 619 P10 970	Air-Deflector Ring .	65,00
30	1	1 619 P14 139	Air Distributor .	58,00
32	1	1 603 523 111	Grinding Spindle M10,	96,00
33	1	1 619 P02 820	O-Ring 44,0x1,0 MM .	30,00
35	1	1 619 P02 821	Shim 0,1 MM .	30,00
35	1	1 619 P02 822	Shim 0,2 MM .	30,00
36	1	1 619 P00 987	Washer .	30,00
37	1	1 600 100 033	Cover Disc .	25,00
38	1	1 619 P02 823	Crown Gear .	108,00

Item	Pc	Order no.	Description	LP in INR
39	1	1 619 P02 825	Bevel Gear .	62,00
41	1	1 600 200 029	Plain bearing .	30,00
45	1	2 915 011 007	Hex Nut DIN 934-M6-8-A .	25,00
47	1	2 609 110 052	Special Screw .	45,00
48	2	1 619 P00 220	Torx Oval-Head Screw	30,00
49	4	1 619 P12 666	Thread-forming tap. Screw	39,00
50	1	1 619 P00 105	Torx Oval-Head Screw	30,00
55	4	1 619 P01 066	Torx Oval-Head Screw	30,00
80	1	1 619 P09 390	Cover Disc .	69,00
179	1	1 619 P11 856	Connection Cable .	26,00
650	1	F 002 G30 042	Auxiliary Handle .	36,00
651	1	1 600 A00 XU5	Protective Cover Ø100 MM	123,00
652	1	1 619 P09 976	Round Nut With 2 Holes .	52,00
653	1	1 600 A00 F93	Pin-Type Face-Wrench .	31,00
654	1	1 619 P12 159	Clamping-Flange	49,00
805	1	1 604 460 7A4	Power supply cord .	165,00
810	1	1 619 P11 715	Carbon-Brush Set .	153,00
828	1	1 619 P07 451	Bearing Flange .	447,00
831	1	1 619 P12 186	Gear Housing .	496,00
840	1	1 619 P12 188	Push Button .	82,00
894	1	1 615 430 020	Grease Tube 225 ML .	1.467,00

Please observe: Repairing, modifying and testing of electro-tools are to be performed professionally.The safety regulations according to IEC, EN, VDE, AFNOR and other regulations of the individual countries are to be observed. Subject to change.
This price list supersedes all previous edition. Prices are subjected to change without any prior notice.

3 601 C94 3F0
Stand } ~~23-07~~
Issue } 22-08-17

Fig. /Abb. 2

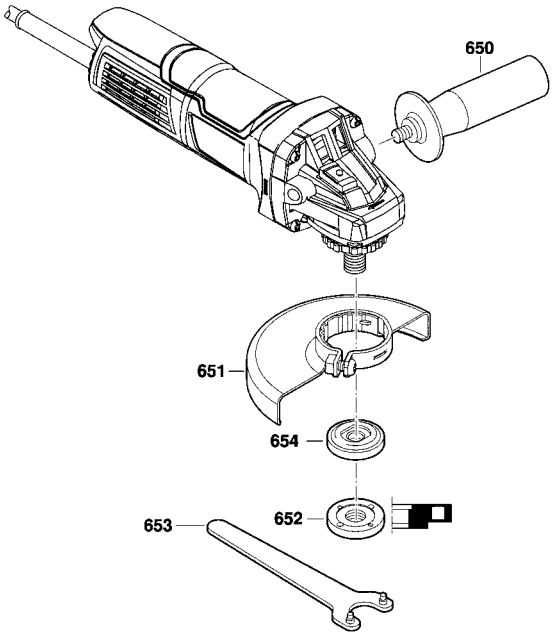

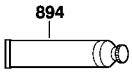

Änderungen vorbehalten
Modifications reserved
Modifications reservees
Salvo modificaciones

Model: 3 601 C94 3F0 = 230	Date:

Item	Pc	Order no.	Description	LP in INR	Item	Pc	Order no.	Description	LP in INR

Please observe: Repairing, modifying and testing of electro-tools are to be performed professionally.The safety regulations according to IEC, EN, VDE, AFNOR and other regulations of the individual countries are to be observed. Subject to change.
This price list supersedes all previous edition. Prices are subjected to change without any prior notice.

BOSCH Power Tools	Angle Grinder	Model GWS 900-100 3 601 C96 0F0 | BO

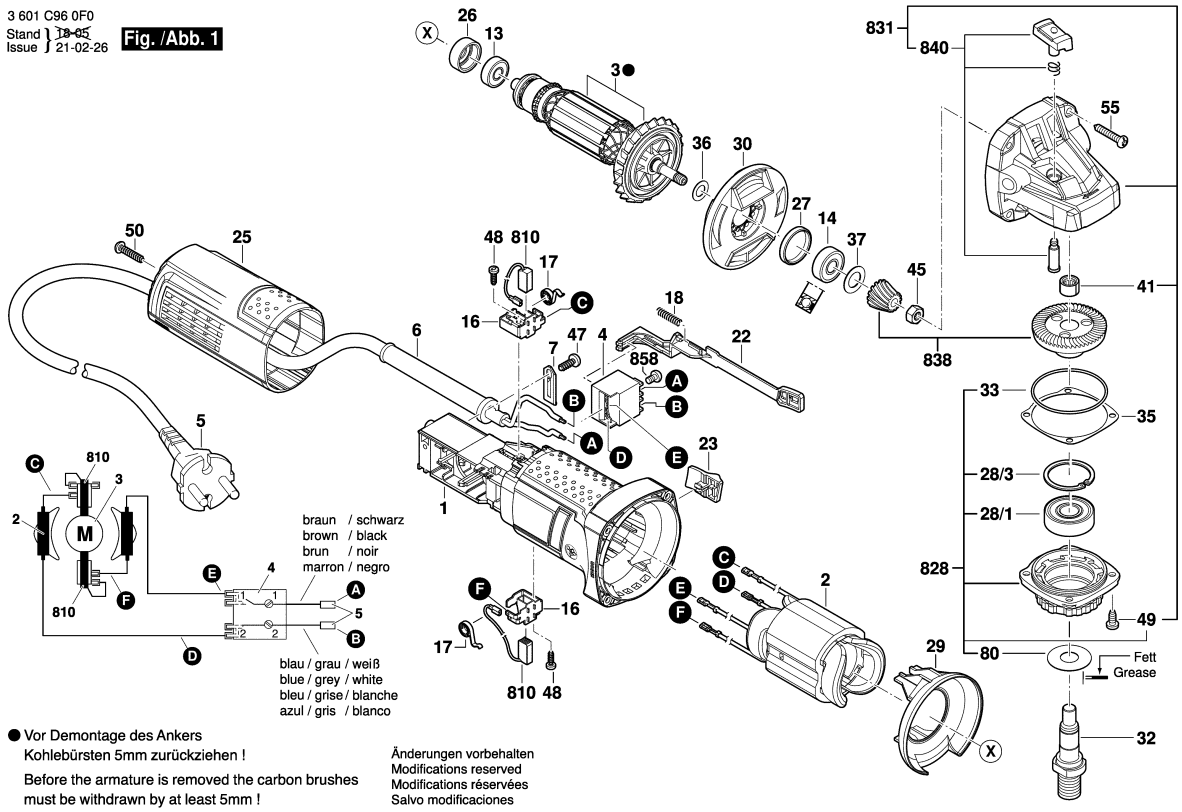

1 / 2

Model: 3 601 C96 0F0 = 230 | Date:

Item	Pc	Order no.	Description	LP IN INR
1	1	1 619 P10 959	Motor Housing .	563,00
2	1	1 604 220 59G	Field .	598,00
3	1	1 604 010 BN1	Armature .	764,00
4	1	1 607 200 31Y	Switch .	267,00
5	1	1 619 P15 857	Power supply cord IND .	
6	1	2 600 703 012	Grommet Ø6,5-Ø6,9x95	25,00
7	1	1 601 302 017	Fastening Clamp .	30,00
13	1	1 619 P08 829	groove ball bearing .	210,00
14	1	1 619 P13 103	groove ball bearing .	173,00
16	2	1 619 P01 811	Brush Holder .	30,00
17	2	1 604 652 013	Spiral Spring .	44,00
18	1	1 619 P11 487	Compression Spring .	52,00
22	1	1 619 P10 968	Adjusting Slide .	49,00
23	1	1 619 P10 969	Switch Button .	48,00
25	1	1 619 P13 558	Housing Cover .	133,00
26	1	1 600 502 023	Intermediate Ring .	68,00
27	1	1 600 206 025	Rubber Ring .	28,00
28/1	1	1 619 P07 440	Ball Bearing .	212,00
28/3	1	2 916 660 013	Retaining clip DIN	48,00
29	1	1 619 P10 970	Air-Deflector Ring .	65,00
30	1	1 619 P14 139	Air Distributor .	58,00
32	1	1 603 523 111	Grinding Spindle M10,	96,00
33	1	1 619 P02 820	O-Ring 44,0x1,0 MM .	30,00
35	1	1 619 P02 821	Shim 0,1 MM .	30,00

Item	Pc	Order no.	Description	LP IN INR
35	1	1 619 P02 822	Shim 0,2 MM .	30,00
36	1	1 619 P00 987	Washer .	30,00
37	1	1 600 100 033	Cover Disc .	25,00
41	1	1 600 910 018	Needle bearing Ø8xØ12x8	57,00
45	1	2 915 011 007	Hex Nut DIN 934-M6-8-A .	25,00
47	1	2 609 110 052	Special Screw .	45,00
48	2	1 619 P00 220	Torx Oval-Head Screw	30,00
49	4	1 603 435 068	Thread-forming tap. Screw	43,00
50	1	1 619 P00 105	Torx Oval-Head Screw	30,00
55	4	1 619 P01 066	Torx Oval-Head Screw	30,00
80	1	1 619 P09 390	Cover Disc .	69,00
650/3	1	1 619 P08 927	Pin-Type Face-Wrench .	179,00
650/1	1	1 602 025 09T	Auxiliary Handle .	109,00
650/2	1	1 619 P09 976	Round Nut With 2 Holes .	52,00
650/5	1	1 605 703 113	Clamping-Flange M10,	42,00
650/5/2	1	1 600 210 039	O-Ring 20,35x1,78 MM .	30,00
651	1	1 600 A00 XU5	Protective Cover Ø100 MM	123,00
810	1	1 619 P11 715	Carbon-Brush Set .	153,00
828	1	1 619 P07 451	Bearing Flange .	447,00
831	1	1 619 P12 186	Gear Housing .	496,00
838	1	1 619 P14 111	Set Of Gears .	404,00
840	1	1 619 P12 188	Push Button .	82,00
858	2	2 910 641 081	Oval-Head Screw	52,00
894	1	1 615 430 020	Grease Tube 225 ML .	1.467,00

Please observe: Repairing, modifying and testing of electro-tools are to be performed professionally.The safety regulations according to IEC, EN, VDE, AFNOR and other regulations of the individual countries are to be observed. Subject to change.
This price list supersedes all previous edition. Prices are subjected to change without any prior notice.

3 601 C96 0F0
Stand / Issue } 16-04-05 **Fig. /Abb. 2**

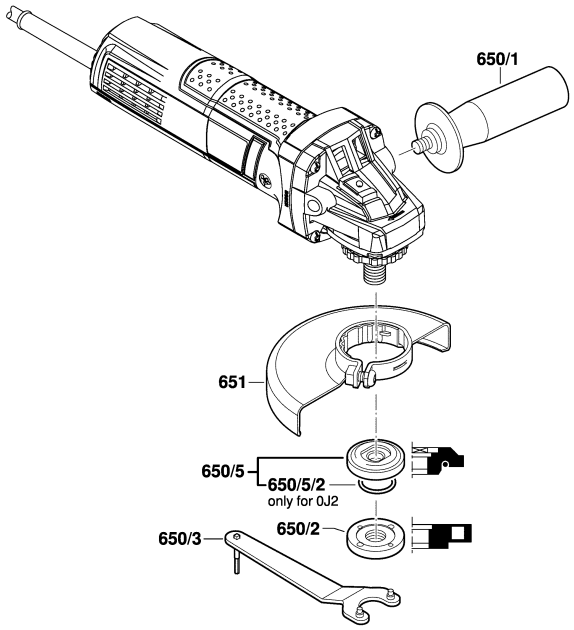

Änderungen vorbehalten
Modifications reserved
Modifications réservées
Salvo modificaciones

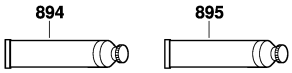

Model: 3 601 C96 0F0 = 230 | Date:

Item	Pc	Order no.	Description	LP IN INR	Item	Pc	Order no.	Description	LP IN INR
895	1	1 605 430 003	Grease Tube 225 ML .	1.585,00					

Please observe: Repairing, modifying and testing of electro-tools are to be performed professionally.The safety regulations according to IEC, EN, VDE, AFNOR and other regulations of the individual countries are to be observed. Subject to change.
This price list supersedes all previous edition. Prices are subjected to change without any prior notice.

0 601 375 0X2
Stand 20-01
Issue 21-07-23

Fig. /Abb. 1

Gerad - Verzahnung

● Vor Demontage des Ankers Kohlebürsten 5mm zurückziehen !

Before the armature is removed the carbon brushes must be withdrawn by at least 5mm !

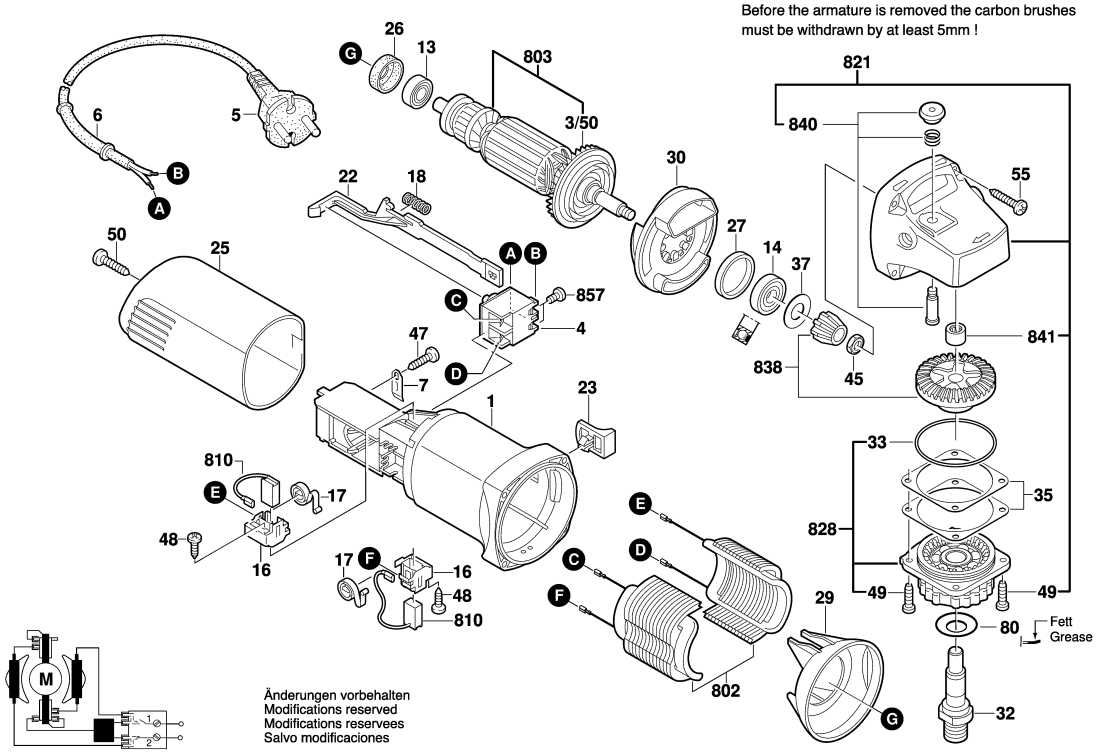

Model: 0 601 375 1X2 = 230 | Date:

Item	Pc	Order no.	Description	INR
1	1	1 619 P09 772	Motor Housing .	132,00
2	1	1 604 220 328	Field 220-240V .	358,00
3	1	1 604 010 626	Armature 220-240V .	503,00
3/5	1	1 606 610 141	Fan .	30,00
4	1	1 607 200 179	On-Off Switch .	128,00
5	1	1 604 460 72V	Power supply cord IND	112,00
6	1	F 002 G31 081	Grommet .	30,00
7	1	1 601 302 017	Fastening Clamp .	30,00
13	1	1 619 P11 239	groove ball bearing .	31,00
14	1	1 619 P11 240	groove ball bearing .	64,00
16	2	1 619 P01 811	Brush Holder .	30,00
17	2	1 604 652 013	Spiral Spring .	44,00
18	1	1 604 611 031	Compression Spring .	25,00
22	1	1 602 319 009	Adjusting Slide .	30,00
23	1	1 619 P02 762	Switch Button BLACK	30,00
25	1	F 002 G31 103	Housing Cover .	
26	1	1 600 206 036	Rubber Ring .	46,00
27	1	1 600 206 025	Rubber Ring .	28,00
29	1	1 600 591 023	Air-Deflector Ring .	34,00
30	1	1 600 591 024	Air-Deflector Ring .	34,00
32	1	1 619 P06 419	Grinding Spindle M 14, SW	385,00
33	1	1 600 210 041	O-Ring 42,0x1,1 MM .	30,00
35	1	1 600 136 016	Shim 0,1 MM THICK	30,00
35	1	1 600 136 017	Shim 0,2 MM THICK	30,00

Item	Pc	Order no.	Description	INR
37	1	1 600 100 033	Cover Disc .	25,00
45	4	2 915 011 007	Hex Nut DIN 934-M6-8-A .	25,00
47	1	2 609 110 052	Special Screw .	45,00
48	4	1 619 P00 220	Torx Oval-Head Screw	30,00
49	4	1 603 435 068	Thread-forming tap. Screw	43,00
50	10	2 910 611 020	Tapping Screw DIN	44,00
55	4	2 910 611 022	Tapping Screw DIN	30,00
80	1	1 619 P09 390	Cover Disc .	69,00
650/1	1	F 002 G30 042	Auxiliary Handle .	36,00
650/2	1	1 603 345 043	Round Nut M14 .	110,00
650/3	1	1 619 P08 927	Pin-Type Face-Wrench .	179,00
650/5	1	2 605 703 014	Clamping Flange	104,00
650/5/2	1	1 600 210 039	O-Ring 20,35x1,78 MM .	30,00
651	1	1 600 A00 XU7	Protective Cover Ø125 MM	553,00
810	1	1 607 014 145	Carbon-Brush Set .	91,00
821	1	1 605 806 466	Gear Housing .	424,00
828	1	1 605 805 090	Bearing Flange BLACK	177,00
838	1	1 600 A02 92J	Bevel Gear Set .	330,00
840	1	1 607 000 298	Push-Button BLACK	55,00
841	1	1 600 910 018	Needle bearing Ø8xØ12x8	57,00
857	2	2 910 641 081	Oval-Head Screw	52,00
894	1	1 615 430 020	Grease Tube 225 ML .	1.467,00
895	1	1 605 430 003	Grease Tube 225 ML .	1.585,00

Please observe: Repairing, modifying and testing of electro-tools are to be performed professionally.The safety regulations according to IEC, EN, VDE, AFNOR and other regulations of the individual countries are to be observed. Subject to change.
This price list supersedes all previous edition. Prices are subjected to change without any prior notice.

0 601 375 0X2
Stand } ~~15-11~~
Issue } 20-01-31

Fig. /Abb. 2

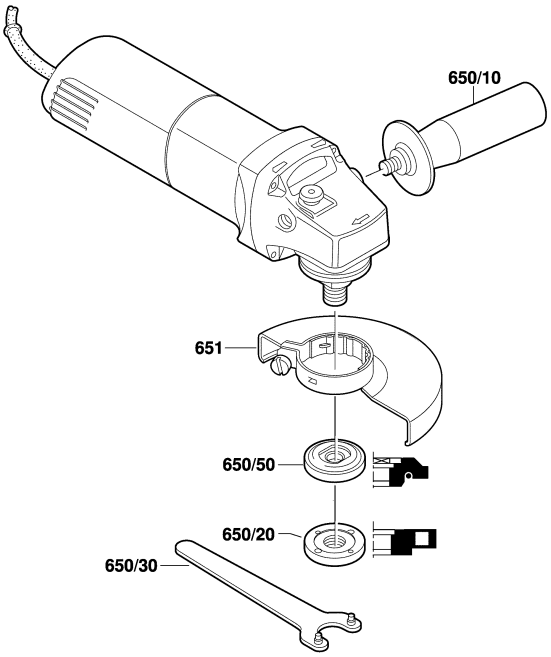

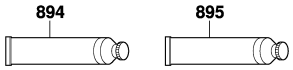

Änderungen vorbehalten
Modifications reserved
Modifications reservees
Salvo modificaciones

Model: 0 601 375 1X2 = 230	Date:

Item	Pc	Order no.	Description	LP IN INR	Item	Pc	Order no.	Description	LP IN INR

Please observe: Repairing, modifying and testing of electro-tools are to be performed professionally.The safety regulations according to IEC, EN, VDE, AFNOR and other regulations of the individual countries are to be observed. Subject to change.
This price list supersedes all previous edition. Prices are subjected to change without any prior notice.

BOSCH Power Tools	Angle Grinder	Model GWS 900-125 3 601 C96 0F2 | BO

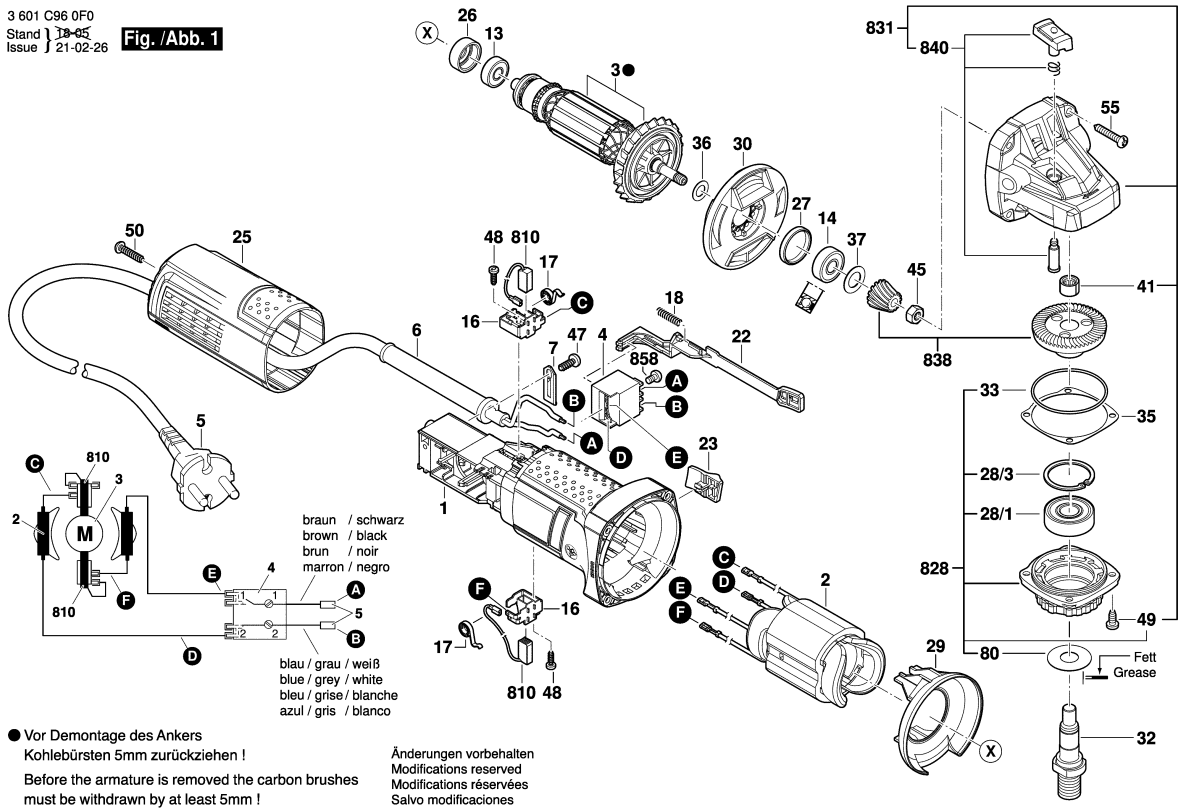

Model: 3 601 C96 0F2 = 230 | Date:

Item	Pc	Order no.	Description	LP IN INR
1	1	1 619 P10 959	Motor Housing .	563,00
2	1	1 604 220 59G	Field .	598,00
3	1	1 604 010 BN1	Armature .	764,00
4	1	1 607 200 31Y	Switch .	267,00
6	1	2 600 703 012	Grommet Ø6,5-Ø6,9x95	25,00
7	1	1 601 302 017	Fastening Clamp .	30,00
13	1	1 619 P08 829	groove ball bearing .	210,00
14	1	1 619 P13 103	groove ball bearing .	173,00
17	2	1 604 652 013	Spiral Spring .	44,00
18	1	1 619 P11 487	Compression Spring .	52,00
22	1	1 619 P10 968	Adjusting Slide .	49,00
23	1	1 619 P10 969	Switch Button .	48,00
25	1	1 619 P13 558	Housing Cover .	133,00
26	1	1 600 502 023	Intermediate Ring .	68,00
27	1	1 600 206 025	Rubber Ring .	28,00
28/1	1	1 619 P07 440	Ball Bearing .	212,00
28/3	1	2 916 660 013	Retaining clip DIN	48,00
29	1	1 619 P10 970	Air-Deflector Ring .	65,00
30	1	1 619 P14 139	Air Distributor .	58,00
32	1	1 619 P06 419	Grinding Spindle M 14, SW	385,00
33	1	1 619 P02 820	O-Ring 44,0x1,0 MM .	30,00
35	1	1 619 P02 821	Shim 0,1 MM .	30,00
35	1	1 619 P02 822	Shim 0,2 MM .	30,00
36	1	1 619 P00 987	Washer .	30,00

Item	Pc	Order no.	Description	LP IN INR
37	1	1 600 100 033	Cover Disc .	25,00
41	1	1 600 910 018	Needle bearing Ø8xØ12x8	57,00
45	1	2 915 011 007	Hex Nut DIN 934-M6-8-A .	25,00
47	1	2 609 110 052	Special Screw .	45,00
48	2	1 619 P00 220	Torx Oval-Head Screw	30,00
49	4	1 603 435 068	Thread-forming tap. Screw	43,00
50	1	1 619 P00 105	Torx Oval-Head Screw	30,00
55	4	1 619 P01 066	Torx Oval-Head Screw	30,00
80	1	1 619 P09 390	Cover Disc .	69,00
650/3	1	1 619 P08 927	Pin-Type Face-Wrench .	179,00
650/1	1	1 602 025 09T	Auxiliary Handle .	109,00
650/2	1	1 603 345 043	Round Nut M14 .	110,00
650/5	1	2 605 703 014	Clamping Flange	104,00
650/5/2	1	1 600 210 039	O-Ring 20,35x1,78 MM .	30,00
651	1	1 600 A00 XU7	Protective Cover Ø125 MM	553,00
810	1	1 619 P11 715	Carbon-Brush Set .	153,00
828	1	1 619 P07 451	Bearing Flange .	447,00
831	1	1 619 P12 186	Gear Housing .	496,00
838	1	1 619 P14 111	Set Of Gears .	404,00
840	1	1 619 P12 188	Push Button .	82,00
858	2	2 910 641 081	Oval-Head Screw	52,00
894	1	1 615 430 020	Grease Tube 225 ML .	1.467,00
895	1	1 605 430 003	Grease Tube 225 ML .	1.585,00

Please observe: Repairing, modifying and testing of electro-tools are to be performed professionally.The safety regulations according to IEC, EN, VDE, AFNOR and other regulations of the individual countries are to be observed. Subject to change.
This price list supersedes all previous edition. Prices are subjected to change without any prior notice.

3 601 C96 0F0
Stand / Issue } 16-04-05 **Fig. /Abb. 2**

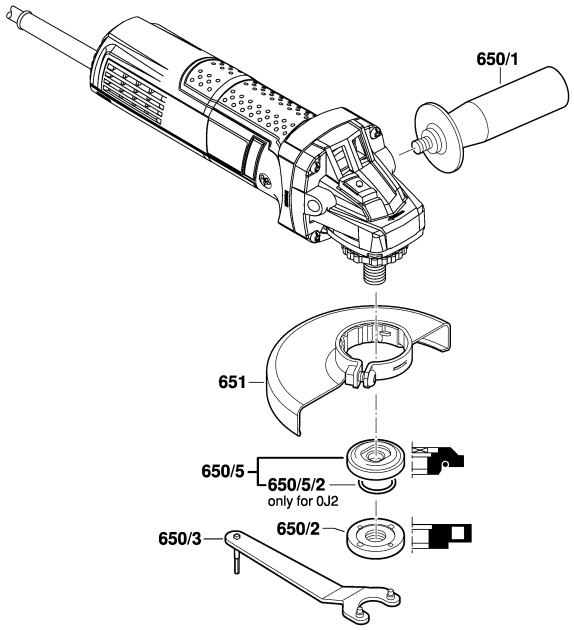

Änderungen vorbehalten
Modifications reserved
Modifications réservées
Salvo modificaciones

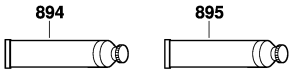

Model: 3 601 C96 0F2 = 230	Date:

Item	Pc	Order no.	Description	LP IN INR	Item	Pc	Order no.	Description	LP IN INR

Please observe: Repairing, modifying and testing of electro-tools are to be performed professionally.The safety regulations according to IEC, EN, VDE, AFNOR and other regulations of the individual countries are to be observed. Subject to change.
This price list supersedes all previous edition. Prices are subjected to change without any prior notice.

BOSCH Power Tools	Angle Grinder	Model GWS 10-125 3 601 H21 2F1 | BO

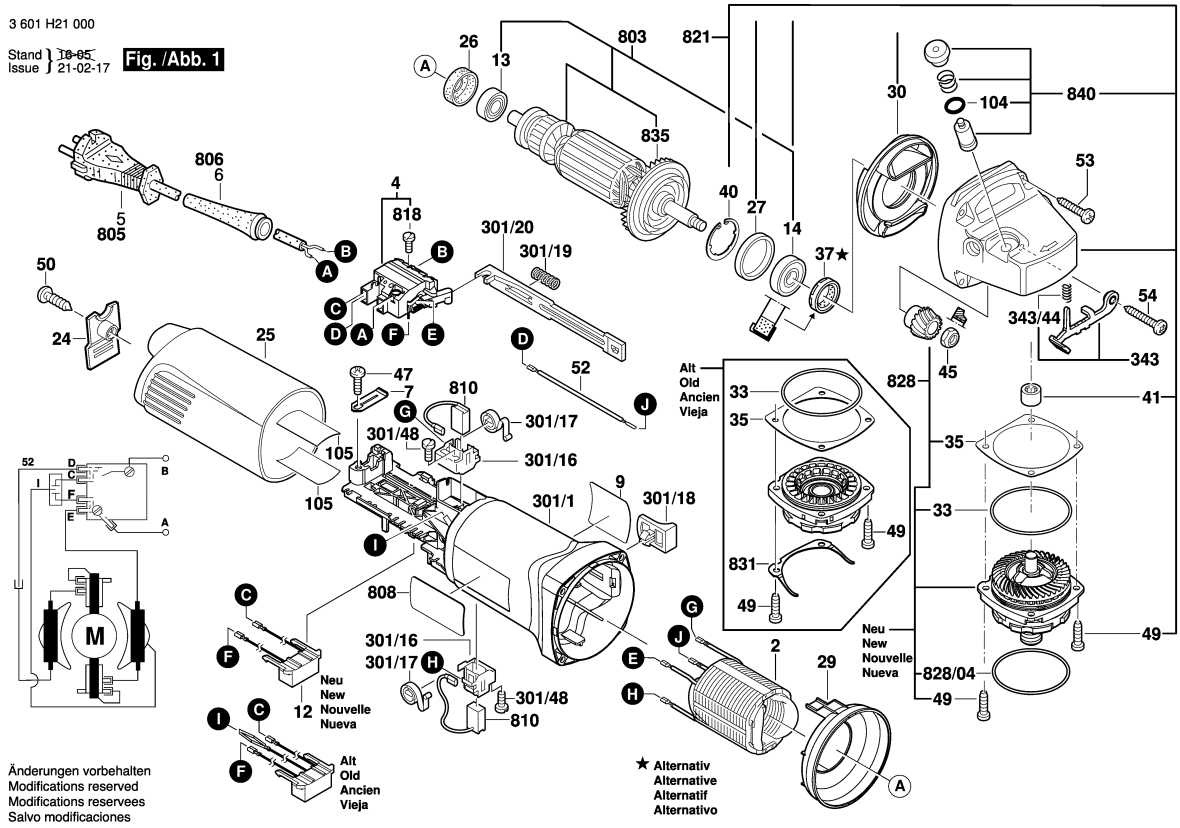

1 / 2

Model: 3 601 H21 2F1 = 230 | Date:

Item	Pc	Order no.	Description	LP IN INR
2	1	1 607 000 F0R	Field .	1.129,00
4	1	1 607 200 086	On-Off Switch .	324,00
7	1	1 601 302 017	Fastening Clamp .	30,00
9	1	1 601 118 G95	Manufacturer's nameplate	
12	1	1 607 328 074	Suppression Capacitor .	277,00
13	1	2 600 905 032	Ball Bearing 7x19x6 .	164,00
14	1	1 600 905 032	groove ball bearing 8x22x7	82,00
24	1	1 605 500 228	Cover BLUE	86,00
25	1	1 605 500 251	Housing Cover DARK	217,00
26	1	1 600 206 036	Rubber Ring .	46,00
27	1	1 600 206 025	Rubber Ring .	28,00
29	1	1 600 591 024	Air-Deflector Ring .	34,00
30	1	1 600 591 014	Air-Deflector Ring .	73,00
32	1	1 619 P06 419	Grinding Spindle M 14, SW	385,00
33	1	1 600 210 035	O-Ring 46,0x1,1 MM .	51,00
35	1	1 600 136 013	Shim 0,1 MM THICK	71,00
35	1	1 600 136 020	Shim 0,15 MM THICK	84,00
35	1	1 600 136 014	Shim 0,2 MM THICK	71,00
35	1	1 600 136 015	Shim 0,3 MM THICK	68,00
37	1	1 600 290 016	Rotary shaft lip seal .	62,00
40	1	1 600 119 011	Retaining clip .	50,00
41	1	1 600 200 029	Plain bearing .	30,00
45	1	1 603 300 016	Hex Nut M7, SW10 .	51,00
47	1	2 603 490 021	Torx Oval-Head Screw	30,00

Item	Pc	Order no.	Description	LP IN INR
49	4	2 914 491 410	Thread-forming tap. Screw	31,00
50	1	2 603 490 023	Torx Oval-Head Screw	30,00
51	1	1 607 233 137	Regulator 220V .	1.788,00
52	1	1 604 448 013	Connecting Cable L=90	81,00
53	3	1 603 435 078	Torx Oval-Head Screw .	71,00
54	1	1 603 414 026	Torx Oval-Head Screw	37,00
80	1	1 619 P09 390	Cover Disc .	69,00
104	1	1 600 210 044	O-Ring 4,5x1,0 MM BLUE	31,00
105	2	1 601 008 005	Insulating Plate .	82,00
301/1	1	1 605 108 249	Motor Housing DARK	253,00
301/16	2	1 601 323 025	Brush Holder .	93,00
301/17	2	1 604 652 013	Spiral Spring .	44,00
301/18	1	1 602 026 088	Switch Handle .	31,00
301/19	1	1 604 611 026	Compression Spring .	38,00
301/20	1	1 602 319 011	Adjusting Slide .	45,00
301/48	2	1 613 435 034	Lens Head Screw 3x10 ST	143,00
343	1	1 607 000 742	Catch Lever .	246,00
343/44	1	1 604 611 042	Compression Spring .	31,00
651	1	1 600 A02 5XR	Protective Cover .	
803	1	1 604 010 A20	Armature With Fan 230V .	2.501,00
805	1	1 607 000 385	Power supply cord EU	877,00
806	1	1 600 703 031	Grommet Ø7,3-Ø8,6x67	67,00
810	1	1 607 014 176	Carbon-Brush Set .	236,00
810	1	1 607 000 482	Carbon-Brush Set	2.294,00

Please observe: Repairing, modifying and testing of electro-tools are to be performed professionally.The safety regulations according to IEC, EN, VDE, AFNOR and other regulations of the individual countries are to be observed. Subject to change.
This price list supersedes all previous edition. Prices are subjected to change without any prior notice.

3 601 H21 000

Stand / Issue ~~07-02~~ 14-03-27 **Fig./Abb. 2**

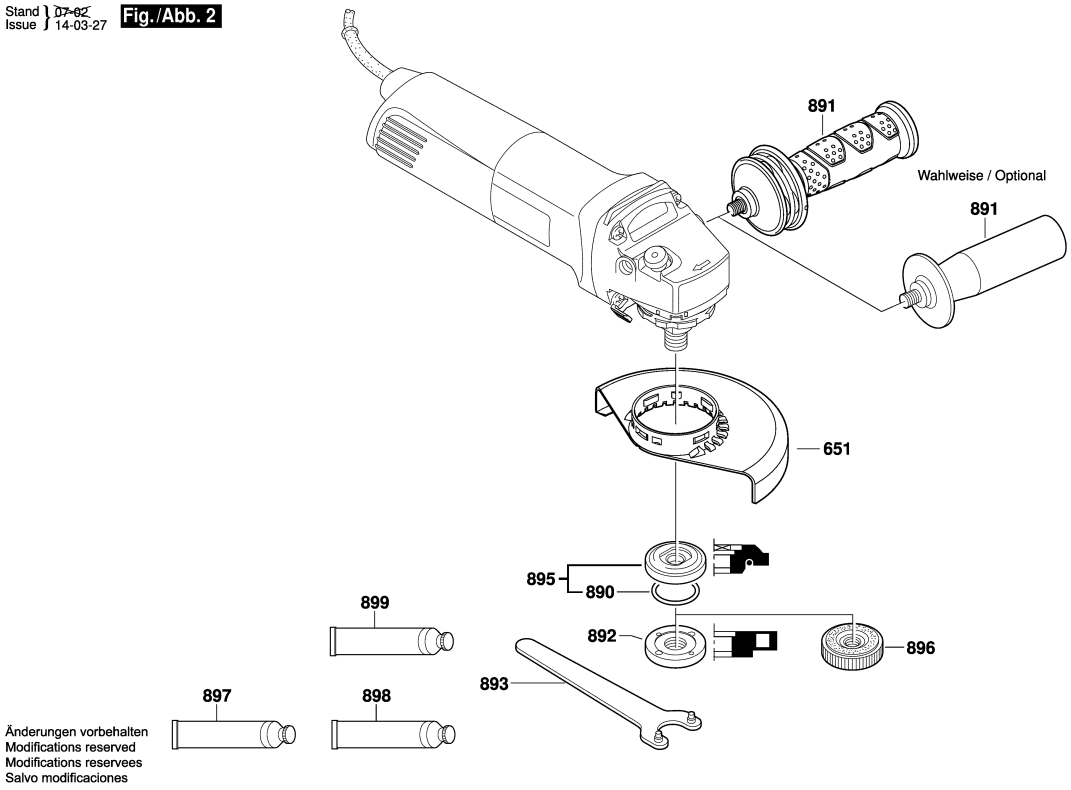

Model: 3 601 H21 2F1 = 230 | Date:

Item	Pc	Order no.	Description	LP IN INR
818	1	2 910 110 048	Pan head screw DIN	31,00
828/04	1	3 600 210 109	O-Ring 47,0x1,5 MM .	50,00
831	1	1 601 290 013	Spring Element .	51,00
835	1	1 606 610 132	Fan .	147,00
840	1	1 607 000 A71	Push-Button .	31,00
890	1	1 600 210 039	O-Ring 20,35x1,78 MM .	30,00
891	1	F 002 G30 042	Auxiliary Handle .	36,00
891	1	1 602 025 0A0	Auxiliary Handle .	782,00
892	1	1 603 345 043	Round Nut M14 .	110,00
893	1	1 619 P08 927	Pin-Type Face-Wrench .	179,00
895	1	2 605 703 014	Clamping Flange	104,00
896	1	1 600 A01 6PP	Fast Locking Flange .	1.692,00

Item	Pc	Order no.	Description	LP IN INR

Please observe: Repairing, modifying and testing of electro-tools are to be performed professionally.The safety regulations according to IEC, EN, VDE, AFNOR and other regulations of the individual countries are to be observed. Subject to change.
This price list supersedes all previous edition. Prices are subjected to change without any prior notice.

BOSCH Power Tools	Angle Grinder	Model GWS 12-125 S 3 601 CA6 0F2 | BO

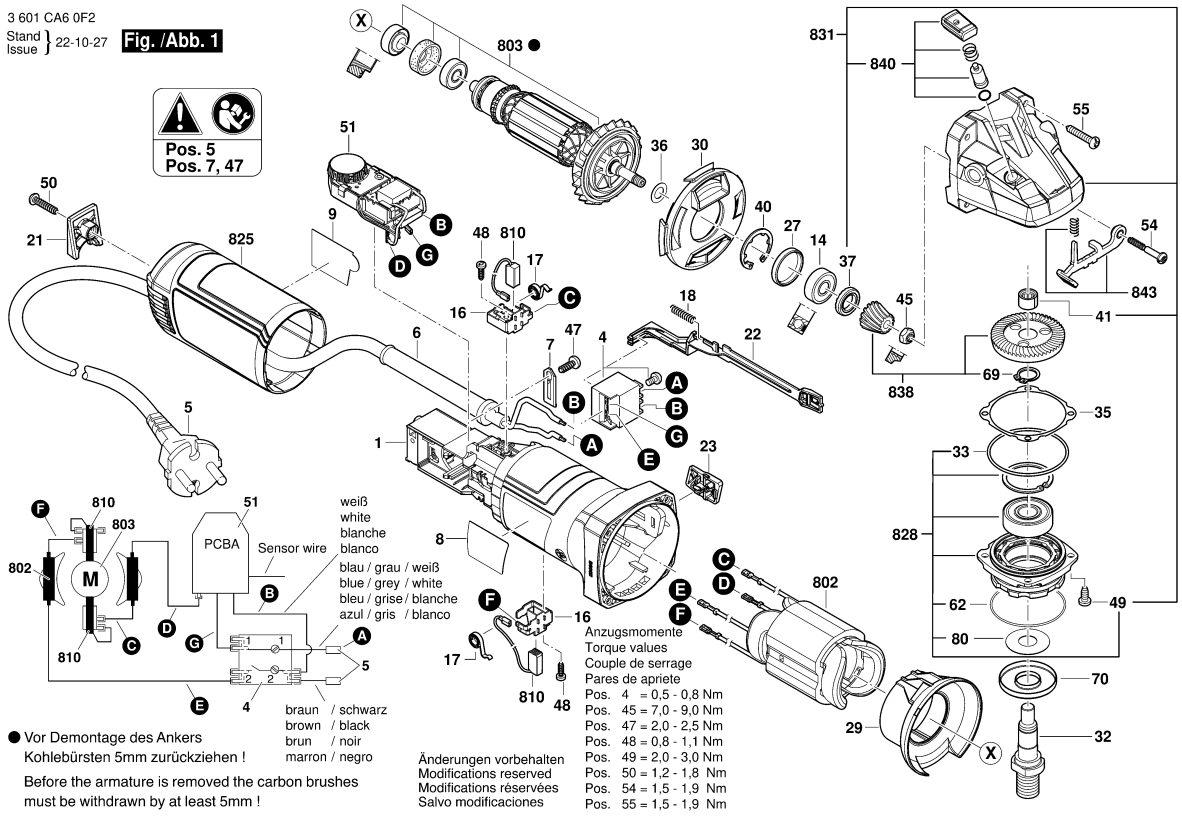

Model: 3 601 CA6 0F2 = 230 | Date:

Item	Pc	Order no.	Description	LP IN INR
1	1	1 619 P20 936	Motor Housing .	166,00
4	1	1 607 200 31S	Switch .	189,00
5	1	F 002 G30 111	Power supply cord .	516,00
6	1	1 600 703 039	Grommet .	65,00
7	1	1 601 302 017	Fastening Clamp .	30,00
8	1	1 601 11A 9E8	Nameplate .	
9	1	1 601 11C 4Y6	Manufacturer's nameplate .	
14	1	1 619 P09 955	groove ball bearing .	79,00
16	2	1 600 A00 RG1	Brush Holder .	43,00
17	2	1 604 652 013	Spiral Spring .	44,00
18	1	1 619 P11 487	Compression Spring .	52,00
21	1	1 619 P20 983	Cap .	26,00
22	1	1 619 P20 940	Adjusting Slide .	26,00
23	1	1 619 P21 162	Switch Button .	26,00
27	1	1 600 206 025	Rubber Ring .	28,00
29	1	1 619 P20 938	Air-Deflector Ring .	32,00
30	1	1 619 P20 939	Air Distributor .	26,00
32	1	1 619 P15 210	Grinding Spindle M14 .	141,00
33	1	1 619 P14 427	O-Ring .	54,00
35	1	1 600 136 013	Shim 0,1 MM THICK	71,00
35	1	1 600 136 014	Shim 0,2 MM THICK	71,00
36	1	1 619 P00 987	Washer .	30,00
37	1	1 600 290 016	Rotary shaft lip seal .	62,00
40	1	1 600 119 011	Retaining clip .	50,00

Item	Pc	Order no.	Description	LP IN INR
41	1	1 600 910 018	Needle bearing Ø8xØ12x8	57,00
45	1	1 619 P16 897	Hex Nut .	26,00
47	1	2 609 110 052	Special Screw .	45,00
48	2	1 619 P00 220	Torx Oval-Head Screw	30,00
49	4	1 603 435 08X	Thread-forming tap. Screw	29,00
50	1	1 619 P00 105	Torx Oval-Head Screw	30,00
51	1	1 607 233 5NX	Speed governor	1.013,00
54	1	1 603 414 026	Torx Oval-Head Screw	37,00
55	3	1 619 P01 066	Torx Oval-Head Screw	30,00
62	1	3 600 210 109	O-Ring 47,0x1,5 MM .	50,00
69	1	2 916 540 007	Retaining ring .	26,00
70	1	3 600 150 038	Cover Disc .	39,00
80	1	1 619 P09 390	Cover Disc .	69,00
650/1	1	1 602 025 0A0	Auxiliary Handle .	782,00
650/2	1	1 603 345 043	Round Nut M14 .	110,00
650/3	1	1 619 P08 927	Pin-Type Face-Wrench .	179,00
650/5	1	2 605 703 014	Clamping Flange	104,00
651	1	1 600 A02 5XR	Protective Cover .	
802	1	1 619 P21 170	Field .	704,00
803	1	1 619 P21 171	Armature .	1.325,00
810	1	1 619 P21 172	Carbon-Brush Set .	188,00
825	1	1 619 P21 173	Housing Cover .	141,00
828	1	1 619 P21 174	Bearing Flange .	340,00
831	1	1 619 P21 176	Gear Housing .	655,00

Please observe: Repairing, modifying and testing of electro-tools are to be performed professionally.The safety regulations according to IEC, EN, VDE, AFNOR and other regulations of the individual countries are to be observed. Subject to change.
This price list supersedes all previous edition. Prices are subjected to change without any prior notice.

3 601 CA6 0F2
Stand / Issue } 22-10-27 **Fig./Abb. 2**

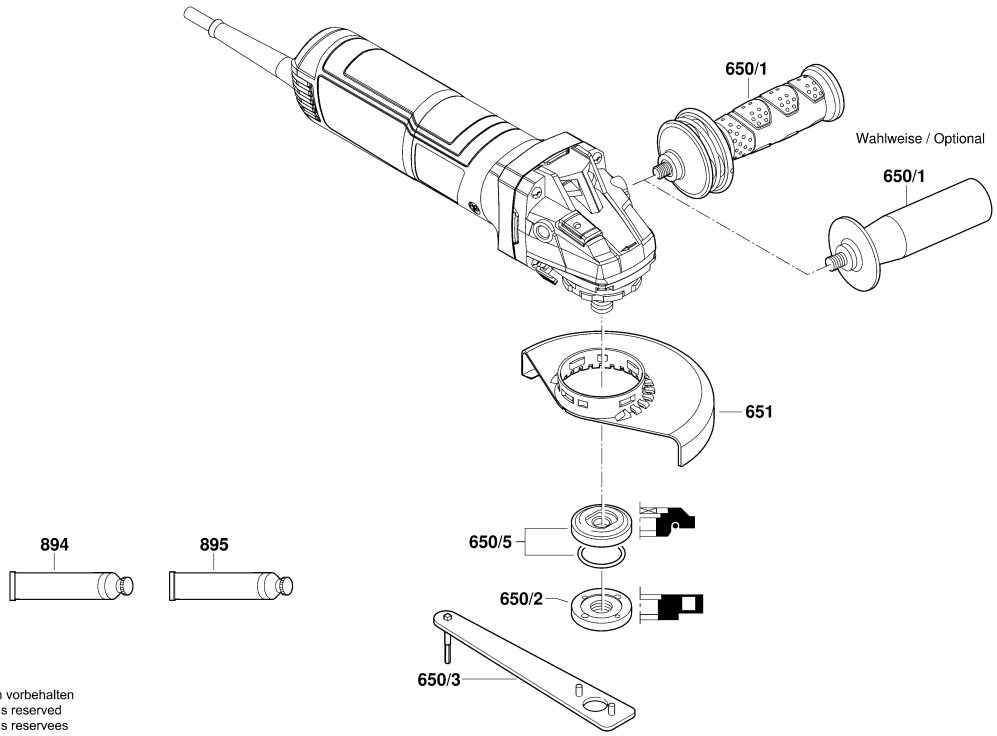

Änderungen vorbehalten
Modifications reserved
Modifications reservees
Salvo modificaciones

Model: 3 601 CA6 0F2 = 230 | Date:

Item	Pc	Order no.	Description	LP IN INR
838	1	1 619 P21 178	Bevel Gear Set .	412,00
840	1	1 619 P21 177	Push-Button .	52,00
843	1	1 607 000 742	Catch Lever .	246,00
894	1	1 615 430 020	Grease Tube 225 ML .	1.467,00
895	1	1 605 430 003	Grease Tube 225 ML .	1.585,00

Item	Pc	Order no.	Description	LP IN INR

Please observe: Repairing, modifying and testing of electro-tools are to be performed professionally.The safety regulations according to IEC, EN, VDE, AFNOR and other regulations of the individual countries are to be observed. Subject to change.
This price list supersedes all previous edition. Prices are subjected to change without any prior notice.

BOSCH Power Tools	Angle Grinder	Model GWS 14-125 3 601 H24 2F2 | BO

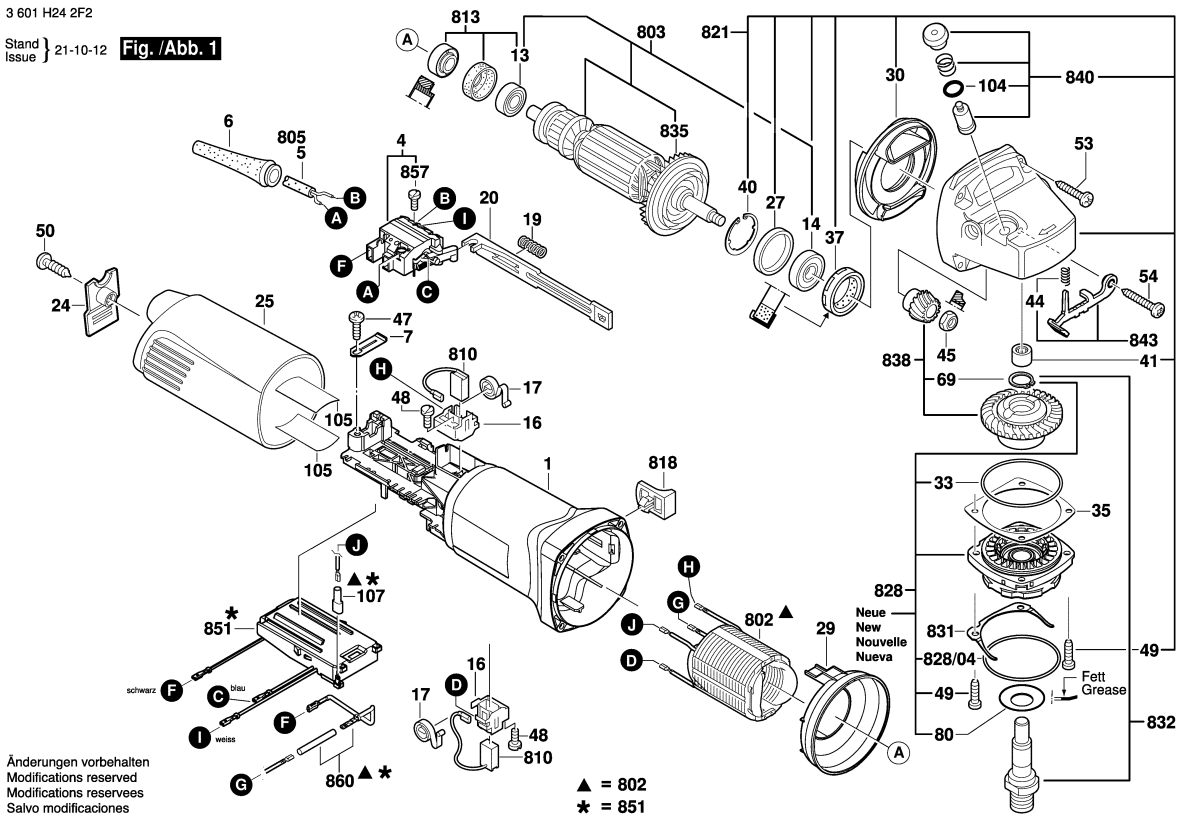

1 / 2

Model: 3 601 H24 2F2 = 230 | Date:

Item	Pc	Order no.	Description	LP IN INR
1	1	1 605 108 249	Motor Housing DARK	253,00
4	1	1 607 200 200	Switch .	224,00
5	1	F 002 G30 111	Power supply cord .	516,00
6	1	1 600 703 031	Grommet Ø7,3-Ø8,6x67	67,00
7	1	1 600 703 031	Grommet Ø7,3-Ø8,6x67	67,00
13	1	1 601 302 017	Fastening Clamp .	30,00
14	1	1 619 P11 239	groove ball bearing .	31,00
16	2	1 600 905 032	groove ball bearing 8x22x7	82,00
17	2	1 601 323 023	Brush Holder WITH	102,00
19	1	1 604 652 013	Spiral Spring .	44,00
20	1	1 604 611 026	Compression Spring .	38,00
24	1	1 602 319 011	Adjusting Slide .	45,00
25	1	1 605 500 228	Cover BLUE	86,00
27	1	1 605 500 251	Housing Cover DARK	217,00
29	1	1 600 591 025	Air-Deflector Ring .	72,00
30	1	1 600 591 014	Air-Deflector Ring .	73,00
33	1	1 600 210 035	O-Ring 46,0x1,1 MM .	51,00
35	1	1 600 136 013	Shim 0,1 MM THICK	71,00
35	1	1 600 136 014	Shim 0,2 MM THICK	71,00
35	1	1 600 136 015	Shim 0,3 MM THICK	68,00
37	1	1 600 290 016	Rotary shaft lip seal .	62,00
40	1	1 600 119 011	Retaining clip .	50,00
41	1	2 600 917 003	Needle-Roller Bearing	74,00
44	1	1 604 611 042	Compression Spring .	31,00

Item	Pc	Order no.	Description	LP IN INR
45	1	1 603 300 016	Hex Nut M7, SW10 .	51,00
47	1	2 912 401 018	Tapping Screw	31,00
48	2	2 912 401 005	Tapping Screw	31,00
49	1	1 619 P07 559	Thread-forming tap. Screw	48,00
50	1	2 912 401 420	Tapping Screw	31,00
53	3	2 910 611 022	Tapping Screw DIN	30,00
54	1	2 603 490 025	Torx Oval-Head Screw	31,00
69	1	2 916 540 007	Retaining ring .	26,00
80	1	1 619 P09 390	Cover Disc .	69,00
104	1	1 600 210 044	O-Ring 4,5x1,0 MM BLUE	31,00
105	2	1 601 008 005	Insulating Plate .	82,00
107	1	1 619 P11 818	Insulating Part .	
651	1	1 600 A02 5XR	Protective Cover .	
802	1	1 607 000 397	Field 220-240V .	923,00
803	1	1 604 010 A22	Armature With Fan	1.761,00
805	1	F 002 G30 111	Power supply cord .	516,00
810	1	1 607 014 176	Carbon-Brush Set .	236,00
813	1	1 607 000 378	Parts Set .	274,00
818	1	1 602 026 088	Switch Handle .	31,00
821	1	1 605 806 5SB	Gear Housing .	774,00
828	1	1 607 000 D6C	Bearing Flange .	351,00
828/04	1	3 600 210 109	O-Ring 47,0x1,5 MM .	50,00
831	1	1 601 290 013	Spring Element .	51,00
832	1	1 619 P15 212	Grinding Spindle .	225,00

Please observe: Repairing, modifying and testing of electro-tools are to be performed professionally.The safety regulations according to IEC, EN, VDE, AFNOR and other regulations of the individual countries are to be observed. Subject to change.
This price list supersedes all previous edition. Prices are subjected to change without any prior notice.

3 601 H24 2F2

Stand ~~21-10~~
Issue 22-04-11

Fig. /Abb. 2

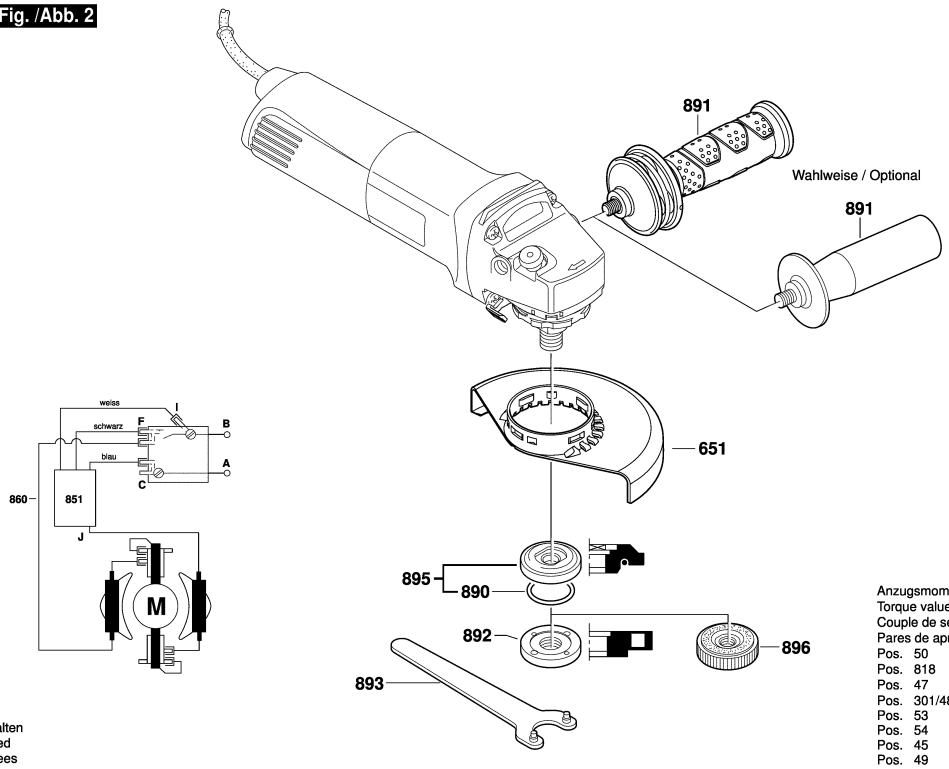

Änderungen vorbehalten
Modifications reserved
Modifications reservees
Salvo modificaciones

Anzugsmomente
Torque values
Couple de serrage
Pares de apriete

Pos.	50	= 1,4 - 1,7 Nm
Pos.	818	= 0,4 - 0,6 Nm
Pos.	47	= 1,0 - 1,8 Nm
Pos.	301/48	= 0,8 - 1,1 Nm
Pos.	53	= 1,5 - 1,8 Nm
Pos.	54	= 1,8 - 1,8 Nm
Pos.	45	= 8 - 12 Nm
Pos.	49	= 2,4 - 2,8 Nm

Model: 3 601 H24 2F2 = 230 | Date:

Item	Pc	Order no.	Description	LP IN INR
835	1	1 606 610 132	Fan .	147,00
838	1	1 607 000 D4Y	Gear Unit .	597,00
840	1	1 607 000 A71	Push-Button .	31,00
843	1	1 607 000 742	Catch Lever .	246,00
851	1	1 607 233 291	Speed governor 220-240V .	1.101,00
857	1	2 910 110 048	Pan head screw DIN	31,00
860	1	1 604 448 023	Connecting Cable .	45,00
890	1	1 600 210 039	O-Ring 20,35x1,78 MM .	30,00
891	1	1 602 025 0A0	Auxiliary Handle .	782,00
892	1	1 603 345 043	Round Nut M14 .	110,00
893	1	1 619 P08 927	Pin-Type Face-Wrench .	179,00
895	1	2 605 703 014	Clamping Flange	104,00
896	1	1 600 A01 6PP	Fast Locking Flange .	1.692,00

Item	Pc	Order no.	Description	LP IN INR

Please observe: Repairing, modifying and testing of electro-tools are to be performed professionally.The safety regulations according to IEC, EN, VDE, AFNOR and other regulations of the individual countries are to be observed. Subject to change.
This price list supersedes all previous edition. Prices are subjected to change without any prior notice.

BOSCH Power Tools	Angle Grinder	Model GWS 18-125 L 3 601 GA3 0K0 | BO

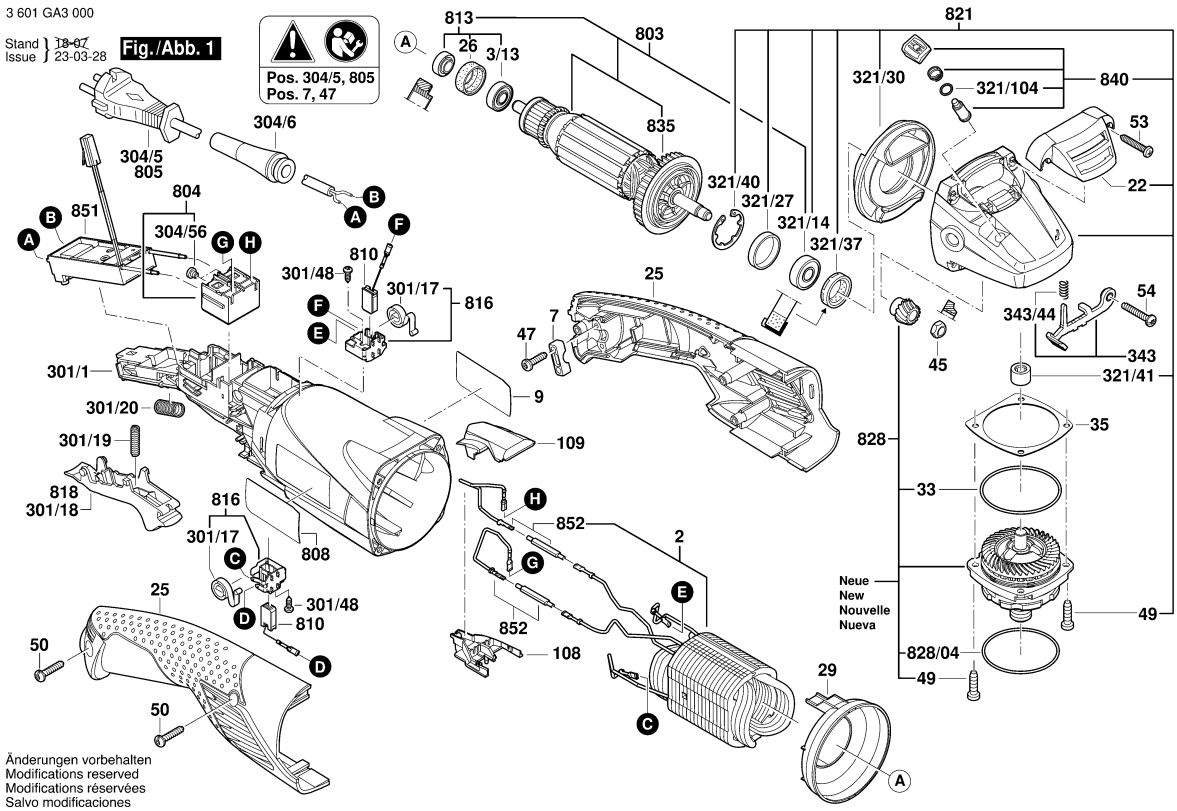

Model: 3 601 GA3 0K0 = 18 | Date:

Item	Pc	Order no.	Description	LP IN INR
2	1	1 604 220 56P	Field .	1.211,00
3/13	1	2 600 905 032	Ball Bearing 7x19x6 .	164,00
7	1	2 601 035 001	Cable Clip .	44,00
9	1	1 601 11C 2EL	Manufacturer's nameplate .	
22	1	1 605 500 260	Covering hood .	45,00
25	1	1 605 132 010	Handle Cover BLUE	517,00
26	1	1 600 206 036	Rubber Ring .	46,00
29	1	1 600 591 025	Air-Deflector Ring .	72,00
33	1	1 600 210 035	O-Ring 46,0x1,1 MM .	51,00
35	1	1 600 136 013	Shim 0,1 MM THICK	71,00
35	1	1 600 136 020	Shim 0,15 MM THICK	84,00
35	1	1 600 136 014	Shim 0,2 MM THICK	71,00
35	1	1 600 136 015	Shim 0,3 MM THICK	68,00
45	1	1 603 300 016	Hex Nut M7, SW10 .	51,00
47	2	2 603 490 022	Screw 4x16 .	30,00
49	4	1 603 435 08X	Thread-forming tap. Screw	29,00
50	3	2 603 490 023	Torx Oval-Head Screw	30,00
53	3	1 603 435 078	Torx Oval-Head Screw .	71,00
54	1	1 603 414 026	Torx Oval-Head Screw	37,00
108	1	1 600 A00 XC4	Cover .	51,00
109	1	1 605 500 263	Cover BLACK	33,00
301/1	1	1 605 108 2DR	Motor Housing .	759,00
301/17	1	1 604 652 021	Spiral Spring .	71,00
301/18	1	1 600 A00 XC7	Adjusting Slide .	121,00

Item	Pc	Order no.	Description	LP IN INR
301/19	1	1 604 611 041	Compression Spring .	51,00
301/20	1	3 604 611 039	Compression Spring .	44,00
301/48	2	1 613 435 034	Lens Head Screw 3x10 ST	143,00
304/6	1	1 600 703 040	Grommet .	69,00
304/56	2	1 603 415 004	Lens Head Screw .	30,00
321/14	1	1 600 905 032	groove ball bearing 8x22x7	82,00
321/27	1	1 600 206 025	Rubber Ring .	28,00
321/30	1	1 600 591 014	Air-Deflector Ring .	73,00
321/37	1	1 600 290 016	Rotary shaft lip seal .	62,00
321/40	1	1 600 119 011	Retaining clip .	50,00
321/41	1	1 600 200 029	Plain bearing .	30,00
321/104	1	1 600 210 044	O-Ring 4,5x1,0 MM BLUE	31,00
343	1	1 607 000 742	Catch Lever .	246,00
343/44	1	1 604 611 042	Compression Spring .	31,00
651	1	1 600 A02 5XR	Protective Cover .	
803	1	1 604 010 B98	Armature .	2.403,00
804	1	1 607 000 D16	On-Off Switch .	369,00
805	1	1 607 000 391	Power supply cord .	2.848,00
808	1	1 601 11A 3H3	Nameplate .	
810	1	1 604 321 186	Carbon Brush .	
813	1	1 607 000 378	Parts Set .	274,00
816	2	1 607 000 V54	Brush Holder .	131,00
821	1	1 607 000 D1F	Gear Housing .	1.358,00
828	1	1 607 000 D62	Bearing Flange .	1.138,00

Please observe: Repairing, modifying and testing of electro-tools are to be performed professionally.The safety regulations according to IEC, EN, VDE, AFNOR and other regulations of the individual countries are to be observed. Subject to change.
This price list supersedes all previous edition. Prices are subjected to change without any prior notice.

3 601 GA3 000

Stand / Issue 18-02-06 **Fig. /Abb. 2**

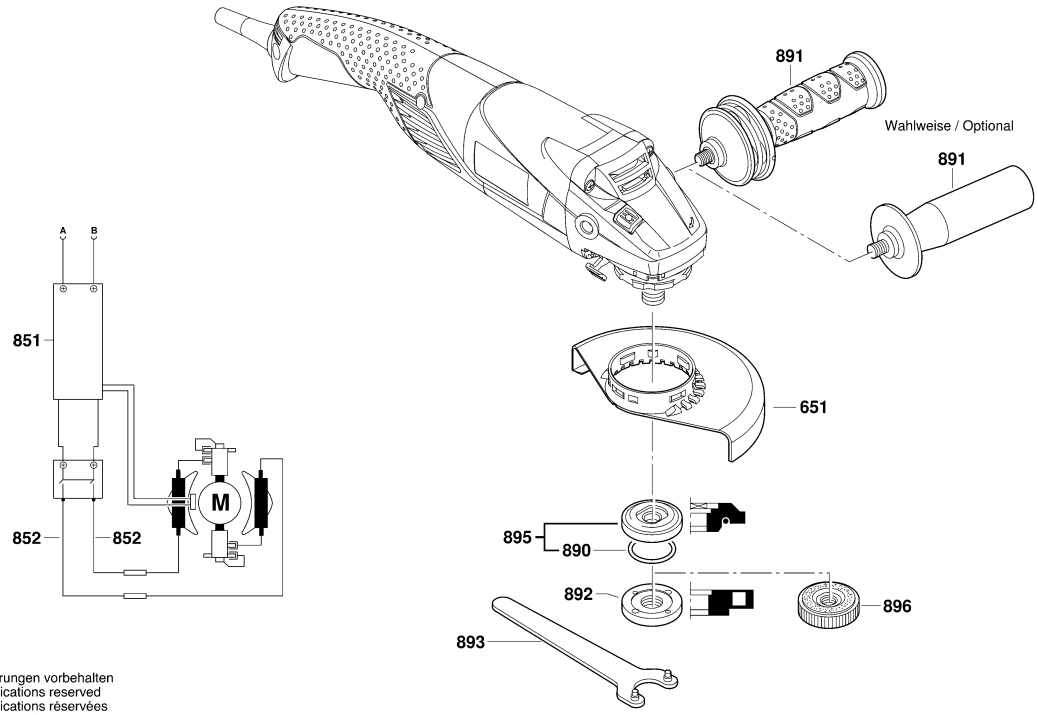

Änderungen vorbehalten
Modifications reserved
Modifications réservées
Salvo modificaciones

Model: 3 601 GA3 0K0 = 18 | Date:

Item	Pc	Order no.	Description	LP IN INR
828/04	1	3 600 210 109	O-Ring 47,0x1,5 MM .	50,00
835	1	1 606 610 132	Fan .	147,00
840	1	1 603 231 032	Push-Button .	100,00
851	1	1 607 233 5M7	Speed governor .	1.482,00
852	1	1 604 448 025	Connecting Cable .	81,00
890	1	1 600 210 039	O-Ring 20,35x1,78 MM .	30,00
891	1	1 602 025 0A0	Auxiliary Handle .	782,00
891	1	1 602 025 09T	Auxiliary Handle .	109,00
892	1	1 603 345 043	Round Nut M14 .	110,00
893	1	1 607 950 052	Pin-Type Face-Wrench .	79,00
895	1	2 605 703 014	Clamping Flange	104,00
896	1	1 600 A01 6PP	Fast Locking Flange .	1.692,00

Item	Pc	Order no.	Description	LP IN INR

Please observe: Repairing, modifying and testing of electro-tools are to be performed professionally.The safety regulations according to IEC, EN, VDE, AFNOR and other regulations of the individual countries are to be observed. Subject to change.
This price list supersedes all previous edition. Prices are subjected to change without any prior notice.

BOSCH Power Tools	Concrete Grinder	Model GBR 15 CAG 3 601 G76 0F0 | BO

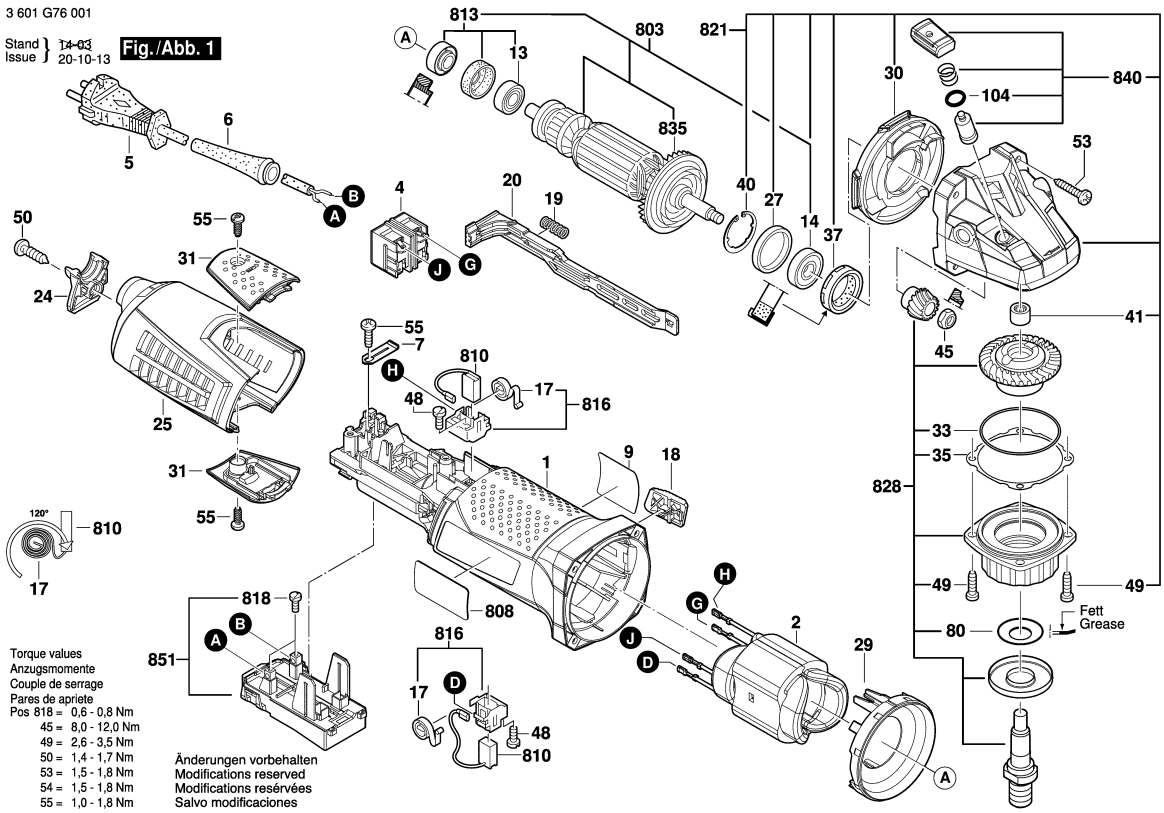

Model: 3 601 G76 0F0 = 230 | Date:

Item	Pc	Order no.	Description	LP IN INR
1	1	1 605 108 283	Motor Housing .	772,00
2	1	1 607 000 F0B	Field .	2.136,00
4	1	1 607 200 256	Switch .	531,00
5	1	1 604 460 787	Power supply cord .	
6	1	1 600 703 044	Grommet .	125,00
7	1	1 601 302 017	Fastening Clamp .	30,00
9	1	3 601 110 606	Manufacturer's nameplate .	
13	1	1 610 905 025	groove ball bearing 7x19x6	183,00
14	1	1 600 905 032	groove ball bearing 8x22x7	82,00
17	2	1 604 652 021	Spiral Spring .	71,00
18	1	1 602 026 091	Switch Handle .	130,00
19	1	1 604 611 031	Compression Spring .	25,00
20	1	1 602 319 026	Adjusting Slide .	98,00
24	1	1 605 500 274	Cover .	154,00
25	1	1 605 500 276	Housing Cover .	314,00
27	1	1 600 206 025	Rubber Ring .	28,00
29	1	1 600 591 047	Air-Deflector Ring .	82,00
30	1	1 600 591 048	Air Distributor .	105,00
31	2	1 605 500 277	Brush-Cover .	62,00
33	1	3 600 210 124	O-Ring 46,0x1,1 MM RED	44,00
35	1	1 600 136 013	Shim 0,1 MM THICK	71,00
35	1	1 600 136 014	Shim 0,2 MM THICK	71,00
35	1	1 600 136 015	Shim 0,3 MM THICK	68,00
35	1	1 600 136 020	Shim 0,15 MM THICK	84,00

Item	Pc	Order no.	Description	LP IN INR
37	1	1 600 290 016	Rotary shaft lip seal .	62,00
40	1	1 600 119 011	Retaining clip .	50,00
41	1	1 600 910 018	Needle bearing Ø8xØ12x8	57,00
45	1	1 603 300 016	Hex Nut M7, SW10 .	51,00
48	2	1 613 435 034	Lens Head Screw 3x10 ST	143,00
49	4	3 603 435 055	Torx Oval-Head Screw .	73,00
50	1	2 603 490 023	Torx Oval-Head Screw	30,00
53	4	1 603 435 078	Torx Oval-Head Screw .	71,00
55	3	2 603 490 021	Torx Oval-Head Screw	30,00
80	1	1 619 P09 390	Cover Disc .	69,00
104	1	1 600 210 044	O-Ring 4,5x1,0 MM BLUE	31,00
202	1	2 605 703 014	Clamping Flange	104,00
202/2	1	1 600 210 055	O-Ring 20,35x1,78 MM .	
203	1	1 603 345 043	Round Nut M14 .	110,00
205	1	3 601 119 236	Reference Plate .	103,00
206	1	3 602 025 029	Handle .	4.556,00
207	2	1 619 P07 611	Hex Screw .	79,00
208	2	2 916 011 017	Plain Washer DIN	71,00
210	1	3 605 510 063	Suction Hood .	2.563,00
211	1	3 605 500 219	Swivel Element .	711,00
212	1	3 602 305 019	Knob .	137,00
213	1	3 604 611 042	Compression Spring .	86,00
214	1	3 600 190 040	Metal Ring .	485,00
650	1	3 607 950 016	Pin-Type Face-Wrench .	1.016,00

Please observe: Repairing, modifying and testing of electro-tools are to be performed professionally.The safety regulations according to IEC, EN, VDE, AFNOR and other regulations of the individual countries are to be observed. Subject to change.
This price list supersedes all previous edition. Prices are subjected to change without any prior notice.

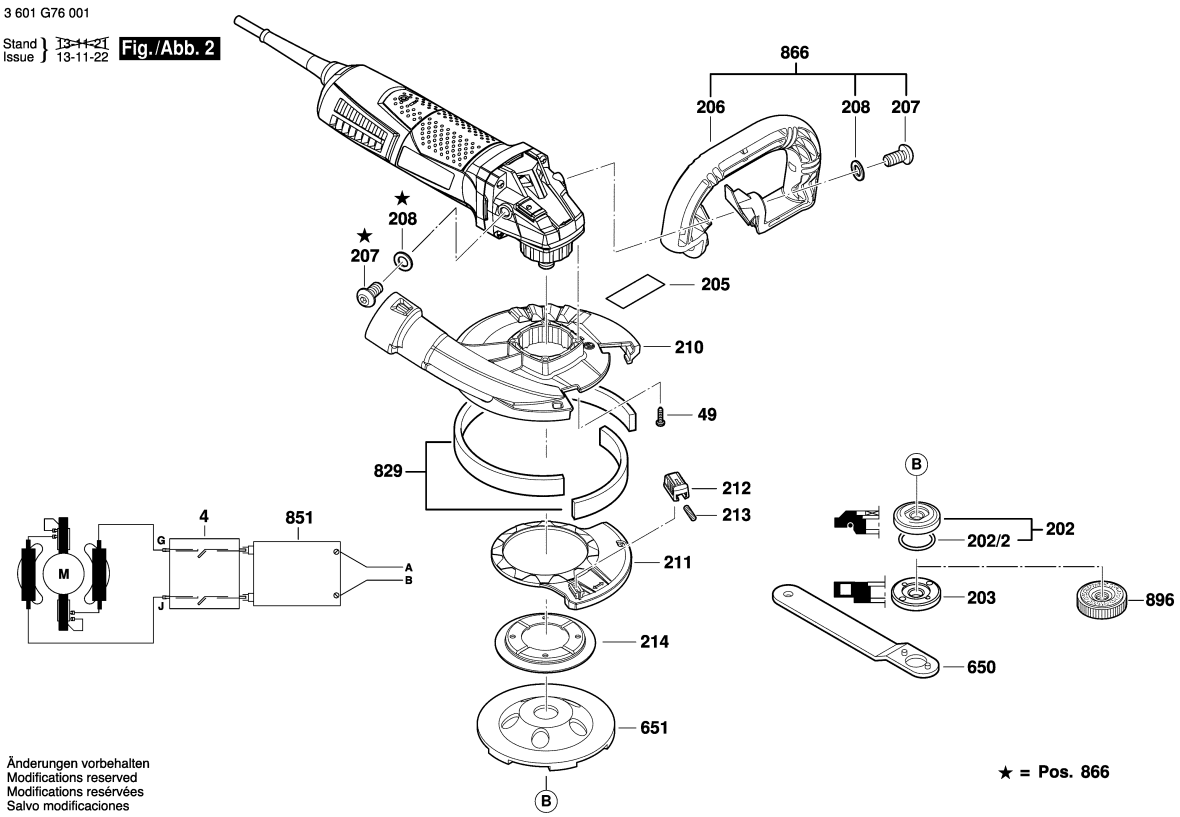

Model: 3 601 G76 0F0 = 230 | Date:

Item	Pc	Order no.	Description	LP IN INR
651	1	3 608 600 014	Diamond Cup Wheel .	
803	1	3 607 031 750	Armature With Fan 230V .	5.979,00
808	1	1 601 11A 3HH	Nameplate .	
810	1	1 607 000 V37	Carbon-Brush Set .	495,00
813	1	3 607 031 751	groove ball bearing .	1.530,00
816	1	1 607 000 V43	Brush Holder .	123,00
818	1	1 607 000 V42	Pan head screw .	71,00
821	1	3 607 031 752	Gear Housing .	4.271,00
828	1	1 607 000 D9F	Bearing Flange .	4.909,00
829	1	3 607 031 875	Strip brush .	2.262,00
835	1	1 606 610 132	Fan .	147,00
840	1	1 607 000 V41	Push-Button .	139,00
851	1	1 607 233 5JJ	Speed governor .	2.828,00
866	1	3 607 031 755	Strap-Shaped Handle .	5.166,00
896	1	1 600 A01 6PP	Fast Locking Flange .	1.692,00

Item	Pc	Order no.	Description	LP IN INR

Please observe: Repairing, modifying and testing of electro-tools are to be performed professionally.The safety regulations according to IEC, EN, VDE, AFNOR and other regulations of the individual countries are to be observed. Subject to change.
This price list supersedes all previous edition. Prices are subjected to change without any prior notice.

BOSCH Power Tools	Universal Angle Polisher	Model GPO 12 CE 3 601 C89 0K0 | BO

3 601 C89 081
Stand } ~~11-10~~
Issue } 12-11-13

Fig. /Abb. 1

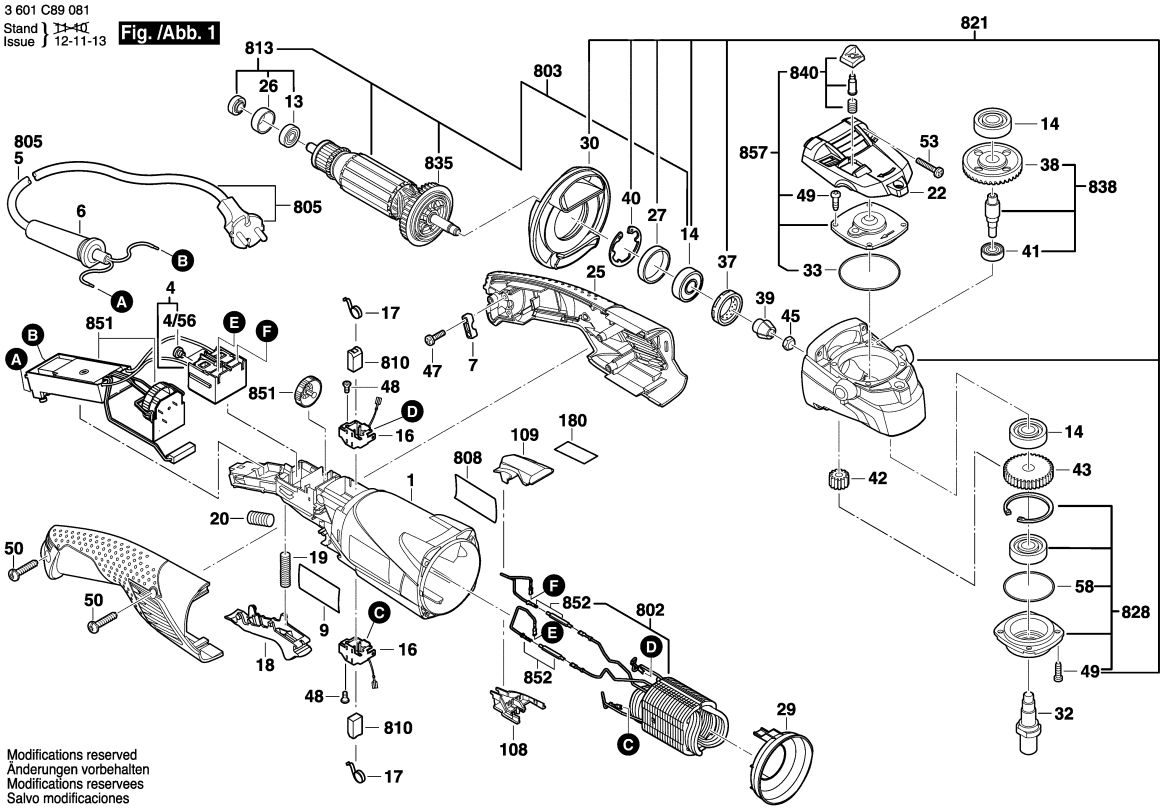

Model: 3 601 C89 0K0 = 230 | Date:

Item	Pc	Order no.	Description	LP IN INR
1	1	1 605 108 255	Motor Housing BLUE	472,00
4	1	1 607 200 257	Switch Assembly .	416,00
4/56	2	1 603 415 004	Lens Head Screw .	30,00
6	1	1 619 P14 643	Grommet Ø 8,6mm .	167,00
7	1	2 601 035 001	Cable Clip .	44,00
9	1	1 619 P07 981	Manufacturer's nameplate	
13	1	2 600 905 032	Ball Bearing 7x19x6 .	164,00
14	3	1 600 905 032	groove ball bearing 8x22x7	82,00
16	2	1 601 323 023	Brush Holder WITH	102,00
17	2	1 604 652 013	Spiral Spring .	44,00
18	1	1 602 319 024	Adjusting Slide .	71,00
19	1	1 604 611 041	Compression Spring .	51,00
20	1	3 604 611 039	Compression Spring .	44,00
22	1	1 619 P07 907	plastic covering .	70,00
25	1	1 600 A01 N0J	Handle .	504,00
26	1	1 600 206 036	Rubber Ring .	46,00
27	1	1 600 206 025	Rubber Ring .	28,00
29	1	1 600 591 025	Air-Deflector Ring .	72,00
30	1	1 600 591 014	Air-Deflector Ring .	73,00
32	1	1 619 P07 906	Grinding Spindle .	261,00
33	1	1 600 210 035	O-Ring 46,0x1,1 MM .	51,00
37	1	1 600 290 016	Rotary shaft lip seal .	62,00
38	1	1 619 P07 918	Crown Gear .	295,00
39	1	1 619 P07 919	Bevel Gear .	268,00

Item	Pc	Order no.	Description	LP IN INR
40	1	1 600 119 011	Retaining clip .	50,00
41	1	1 619 P08 829	groove ball bearing .	210,00
42	1	1 619 P07 912	Cylindrical Gear .	206,00
43	1	1 619 P07 911	Cylindrical Gear .	238,00
45	1	1 603 300 016	Hex Nut M7, SW10 .	51,00
47	2	1 619 P00 029	Screw .	30,00
48	2	2 912 401 005	Tapping Screw	31,00
49	9	1 619 P08 825	Thread-forming tap. Screw	30,00
50	3	1 619 P00 105	Torx Oval-Head Screw	30,00
53	4	1 619 P01 066	Torx Oval-Head Screw	30,00
58	1	1 619 P07 915	O-Ring 39,0x1,1 MM .	30,00
108	1	1 605 500 258	Cover BLACK	32,00
109	1	1 605 500 263	Cover BLACK	33,00
802	1	1 604 220 417	Field 220-240V .	1.057,00
803	1	1 619 P09 115	Armature With Fan	1.993,00
805	1	1 607 000 391	Power supply cord .	2.848,00
808	1	1 619 P07 931	Nameplate .	
810	1	1 607 014 176	Carbon-Brush Set .	236,00
813	1	1 607 000 378	Parts Set .	274,00
821	1	1 619 P09 078	Gear Housing .	1.109,00
828	1	1 619 P09 081	Bearing Flange .	600,00
835	1	1 606 610 132	Fan .	147,00
838	1	1 619 P09 080	Crown Gear .	912,00
840	1	1 619 P09 082	push button set .	60,00

Please observe: Repairing, modifying and testing of electro-tools are to be performed professionally.The safety regulations according to IEC, EN, VDE, AFNOR and other regulations of the individual countries are to be observed. Subject to change.
This price list supersedes all previous edition. Prices are subjected to change without any prior notice.

3 601 C89 081
Stand ~~11-01~~
Issue 14-02-27

Fig. /Abb. 2

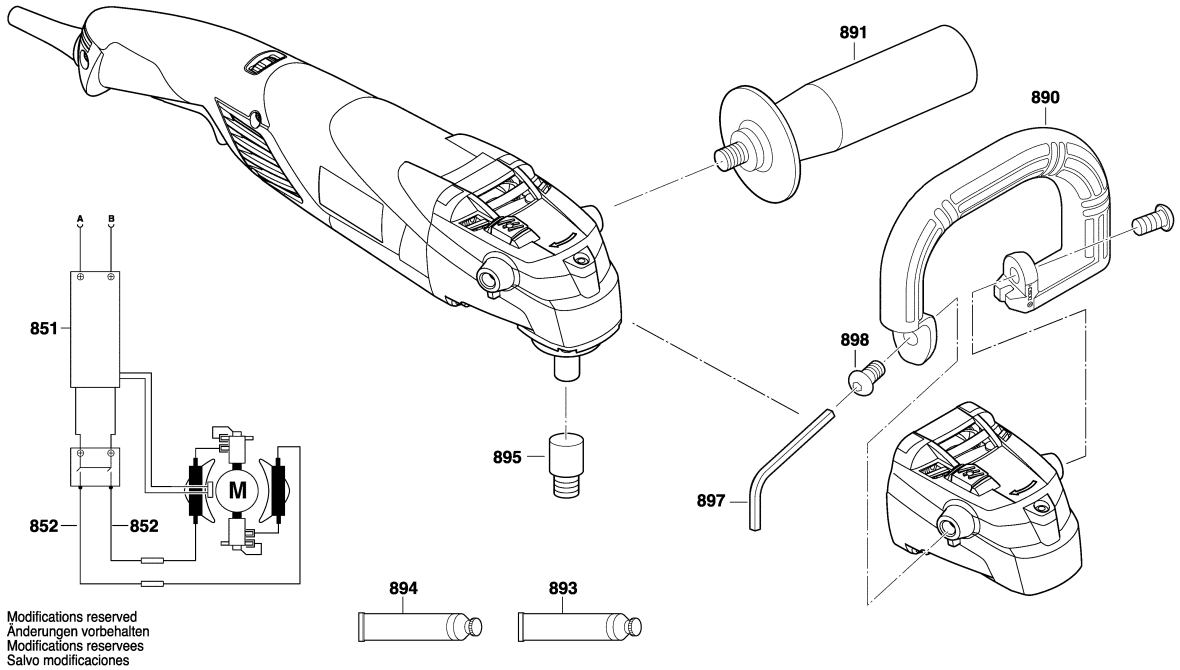

Model: 3 601 C89 0K0 = 230 | Date:

Item	Pc	Order no.	Description	LP IN INR	Item	Pc	Order no.	Description	LP IN INR
851	1	1 607 233 256	Speed governor .	3.421,00					
852	1	1 604 448 025	Connecting Cable .	81,00					
857	1	1 619 P09 079	Gear Cover .	574,00					
890	1	1 619 P07 563	Handle .	357,00					
891	1	1 602 025 09T	Auxiliary Handle .	109,00					
893	1	1 605 430 003	Grease Tube 225 ML .	1.585,00					
894	1	1 615 430 020	Grease Tube 225 ML .	1.467,00					
895	1	1 619 P07 614	Socket-Outlet Adaptor .	126,00					
897	1	1 619 P07 612	Hex Screw Driver .	81,00					
898	1	1 619 P07 611	Hex Screw .	79,00					

Please observe: Repairing, modifying and testing of electro-tools are to be performed professionally.The safety regulations according to IEC, EN, VDE, AFNOR and other regulations of the individual countries are to be observed. Subject to change.
This price list supersedes all previous edition. Prices are subjected to change without any prior notice.

BOSCH Power Tools	Angle Grinder	Model GWS 2000 3 601 HB7 0F0 | BO

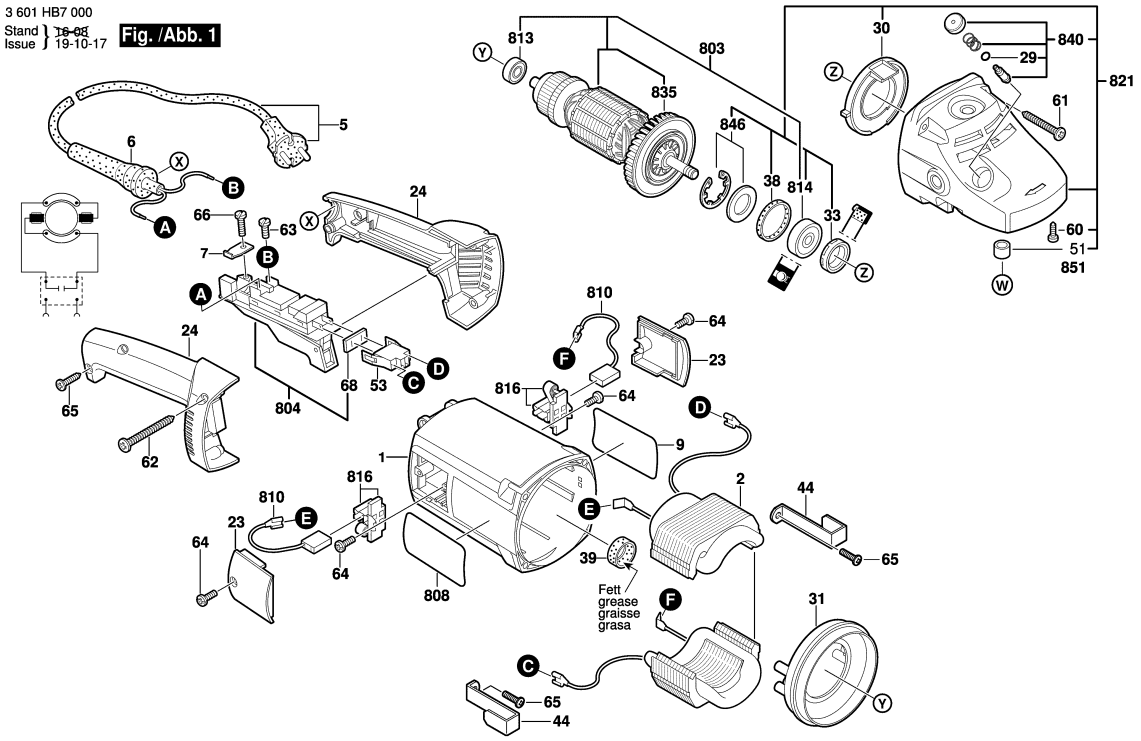

Änderungen vorbehalten
Modifications reserved
Modifications reservees
Salvo modificaciones

Model: 3 601 HB7 0F0 = 230 | Date:

Item	Pc	Order no.	Description	LP IN INR
1	1	1 605 108 233	Motor Housing BLUE	224,00
2	1	1 604 220 380	Field 220-240V .	1.432,00
5	1	F 002 G31 006	Power supply cord .	300,00
6	1	2 600 703 019	Grommet Ø8,7-Ø9,6x76	65,00
7	1	1 601 302 018	Fastening Clamp .	51,00
9	1	1 619 P13 489	Manufacturer's nameplate	
23	2	1 619 P14 320	Sealing cap .	90,00
24	1	1 619 P13 504	Handle .	160,00
28	1	1 600 210 033	O-Ring 79,0x1,78 MM .	51,00
29	1	1 600 210 045	O-Ring 8,0x1,0 MM .	50,00
30	1	1 600 591 035	Air Distributor .	73,00
31	1	1 619 P17 209	Air-Deflector Ring .	83,00
32	1	1 600 290 019	Retaining snap ring .	47,00
33	1	1 600 290 013	Rotary shaft lip seal 18,7	74,00
34	1	1 600 190 020	Shim 0,15 MM THICK	51,00
34	1	1 600 190 021	Shim 0,3 MM THICK	51,00
34	1	1 600 190 022	Shim 0,1 MM THICK	53,00
34	1	1 600 190 037	Shim 0,2 MM THICK	31,00
34	1	1 600 190 038	Shim 0,25 MM THICK	31,00
34	1	1 600 190 039	Shim 0,35 MM THICK	31,00
34	1	1 600 190 040	Shim 0,4 MM THICK	31,00
35	1	1 600 205 034	Felt Washer .	51,00
37	1	1 600 290 036	Seal Ring BLACK	74,00
38	1	1 600 206 020	Rubber Ring 7 MM WIDE	50,00

Item	Pc	Order no.	Description	LP IN INR
39	1	1 619 P14 249	Rubber Ring .	30,00
44	2	1 601 334 009	Pickup Clip .	35,00
45	1	1 603 300 019	Hex Nut M10, SW14 .	50,00
53	1	1 605 190 068	Socket Housing .	50,00
60	3	1 603 435 023	Thread-forming tap. Screw	47,00
61	4	2 912 401 038	Tapping Screw DIN	31,00
62	2	1 603 435 024	Tapping Screw C4,8x63	54,00
63	2	1 603 410 014	Pan head screw M4x10 MM	50,00
64	4	1 603 435 042	Plastic-Cutting Screw	50,00
65	4	2 912 401 020	Tapping Screw DIN	31,00
66	1	2 910 211 019	Tapping Screw DIN	31,00
68	1	1 601 006 011	Sealing Plate .	50,00
69	1	2 916 650 905	Spring retaining ring .	29,00
651	1	1 600 A00 XL9	Protective Cover Ø180 MM	312,00
803	1	1 604 011 252	Armature 220-240V .	2.709,00
804	1	1 619 P14 186	Switch .	297,00
810	1	1 607 014 171	Carbon-Brush Set .	267,00
813	1	1 600 905 011	groove ball bearing 8x22x7	106,00
814	1	1 600 905 023	groove ball bearing	115,00
816	2	1 604 336 048	Brush Holder .	164,00
821	1	1 619 P14 183	Gear Housing .	783,00
822	1	1 619 P15 298	Bearing Flange Ø180 MM .	1.069,00
822/22/4	1	1 600 119 010	Spring retaining ring .	51,00
822/22/5	1	1 600 905 026	groove ball bearing	120,00

Please observe: Repairing, modifying and testing of electro-tools are to be performed professionally.The safety regulations according to IEC, EN, VDE, AFNOR and other regulations of the individual countries are to be observed. Subject to change.
This price list supersedes all previous edition. Prices are subjected to change without any prior notice.

3 601 HB7 000
Stand } ~~19-10~~
Issue } 20-03-30

Fig. /Abb. 2

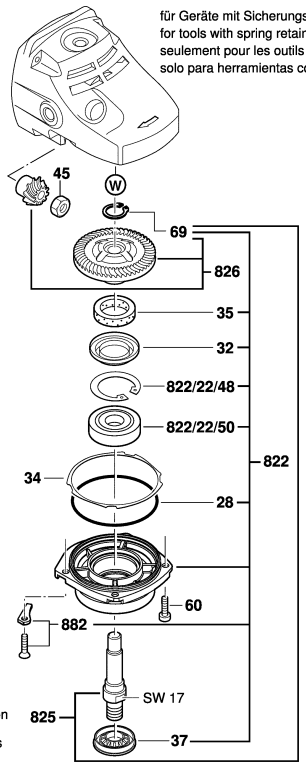

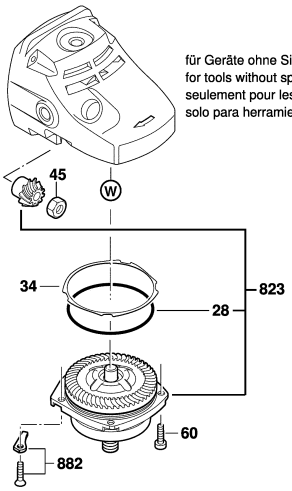

Änderungen vorbehalten
Modifications reserved
Modifications réservées
Salvo modificaciones

2 / 3

Model: 3 601 HB7 0F0 = 230 | Date:

Item	Pc	Order no.	Description	LP IN INR
823	1	1 619 P15 624	Bearing Flange Ø180 MM .	
825	1	1 619 P15 297	Grinding Spindle .	369,00
826	1	1 619 P15 405	Bevel Gear Set Ø180 MM .	680,00
835	1	1 606 610 127	Fan .	89,00
840	1	1 607 000 354	Push-Button .	228,00
846	1	1 607 000 342	Retaining Washer .	56,00
882	1	1 619 P06 597	Stopper .	192,00
890	1	1 600 210 039	O-Ring 20,35x1,78 MM .	30,00
891	1	1 619 P09 013	Auxiliary Handle .	147,00
891/1	1	1 602 025 09Z	Auxiliary Handle .	639,00
892	1	1 607 950 061	Pin-Type Face-Wrench .	65,00
893	1	2 605 703 014	Clamping Flange	104,00
894	1	1 603 345 043	Round Nut M14 .	110,00
896	1	1 600 A01 6PP	Fast Locking Flange .	1.692,00
897	1	1 605 430 003	Grease Tube 225 ML .	1.585,00
898	1	1 615 430 020	Grease Tube 225 ML .	1.467,00

Item	Pc	Order no.	Description	LP IN INR

Please observe: Repairing, modifying and testing of electro-tools are to be performed professionally.The safety regulations according to IEC, EN, VDE, AFNOR and other regulations of the individual countries are to be observed. Subject to change.
This price list supersedes all previous edition. Prices are subjected to change without any prior notice.

3 601 HB7 000
Stand } 18-08
Issue } 19-10-17

Fig./Abb. 3

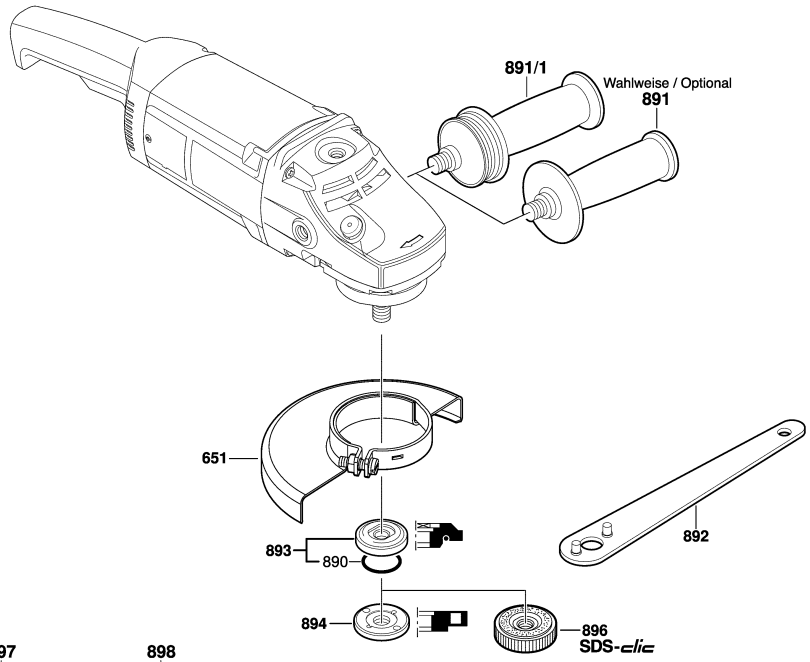

Änderungen vorbehalten
Modifications reserved
Modifications reservees
Salvo modificaciones

Model: 3 601 HB7 0F0 = 230 | Date:

Item	Pc	Order no.	Description	LP IN INR	Item	Pc	Order no.	Description	LP IN INR

Please observe: Repairing, modifying and testing of electro-tools are to be performed professionally.The safety regulations according to IEC, EN, VDE, AFNOR and other regulations of the individual countries are to be observed. Subject to change.
This price list supersedes all previous edition. Prices are subjected to change without any prior notice.

BOSCH Power Tools	Angle Grinder	Model GWS 2200 3 601 HC0 0F0 | BO

3 601 HC0 080
Stand ~~19-11~~
Issue 19-12-03

Fig. /Abb. 1

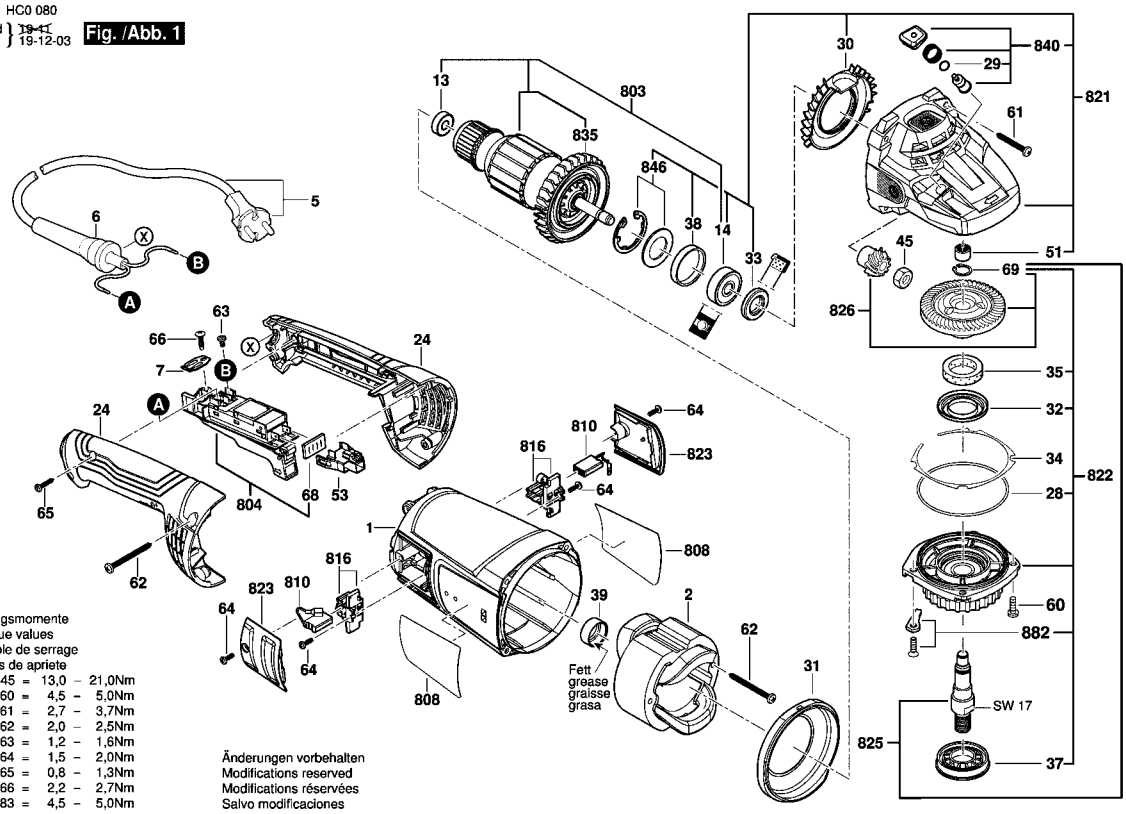

Anzugsmomente
Torque values
Couple de serrage
Pares de apriete

Pos. 45	=	13,0	–	21,0Nm
60	=	4,5	–	5,0Nm
61	=	2,7	–	3,7Nm
62	=	2,0	–	2,5Nm
63	=	1,2	–	1,6Nm
64	=	1,5	–	2,0Nm
65	=	0,8	–	1,3Nm
66	=	2,2	–	2,7Nm
83	=	4,5	–	5,0Nm

Änderungen vorbehalten
Modifications reserved
Modifications réservées
Salvo modificaciones

Model: 3 601 HC0 0F0 = 230 | Date:

Item	Pc	Order no.	Description	LP in INR
1	1	1 619 P15 267	Motor Housing .	314,00
2	1	1 619 P15 702	Field .	1.047,00
5	1	F 002 G31 006	Power supply cord .	300,00
6	1	2 600 703 019	Grommet Ø8,7-Ø9,6x76	65,00
			. .	
7	1	1 601 302 018	Fastening Clamp .	51,00
13	1	1 600 905 011	groove ball bearing 8x22x7	106,00
14	1	1 600 905 028	groove ball bearing .	228,00
24	1	1 619 P15 272	Handle .	221,00
28	1	1 600 210 033	O-Ring 79,0x1,78 MM .	51,00
29	1	1 600 210 045	O-Ring 8,0x1,0 MM .	50,00
30	1	1 619 P15 274	Air Distributor .	39,00
31	1	1 600 591 07T	Air-Deflector Ring .	
32	1	1 600 290 019	Retaining snap ring .	47,00
33	1	1 600 290 013	Rotary shaft lip seal 18,7	74,00
34	1	1 600 190 022	Shim 0,1 MM THICK	53,00
34	1	1 600 190 020	Shim 0,15 MM THICK	51,00
34	1	1 600 190 037	Shim 0,2 MM THICK	31,00
34	1	1 600 190 038	Shim 0,25 MM THICK	31,00
34	1	1 600 190 021	Shim 0,3 MM THICK	51,00
34	1	1 600 190 039	Shim 0,35 MM THICK	31,00
34	1	1 600 190 040	Shim 0,4 MM THICK	31,00
35	1	1 600 205 034	Felt Washer .	51,00
37	1	1 600 290 036	Seal Ring BLACK	74,00

Item	Pc	Order no.	Description	LP in INR
38	1	1 600 206 020	Rubber Ring 7 MM WIDE	50,00
39	1	1 600 206 030	Rubber Ring .	46,00
45	1	1 603 300 019	Hex Nut M10, SW14 .	50,00
51	1	2 600 910 001	Needle-Roller Bearing Ø14	58,00
53	1	1 605 190 068	Socket Housing .	50,00
60	3	1 603 435 023	Thread-forming tap. Screw	47,00
61	4	2 912 401 038	Tapping Screw DIN	31,00
62	2	1 603 435 060	Tapping Screw 4,8x55 .	30,00
63	2	1 603 410 014	Pan head screw M4x10 MM	50,00
64	4	1 603 435 042	Plastic-Cutting Screw	50,00
65	4	2 912 401 020	Tapping Screw DIN	31,00
66	1	2 910 211 019	Tapping Screw DIN	31,00
68	1	1 601 006 011	Sealing Plate .	50,00
69	1	2 916 650 905	Spring retaining ring .	29,00
651	1	1 619 P15 622	Protective Cover Ø180 MM	337,00
803	1	1 619 P15 749	Armature .	1.498,00
804	1	1 619 P14 186	Switch .	297,00
810	1	1 607 014 171	Carbon-Brush Set .	267,00
816	2	1 604 336 048	Brush Holder .	164,00
821	1	1 619 P15 750	Gear Housing .	823,00
822	1	1 619 P15 751	Bearing Flange Ø180 MM .	632,00
823	1	1 619 P15 945	Sealing cap .	48,00
825	1	1 619 P15 297	Grinding Spindle .	369,00
826	1	1 619 P15 405	Bevel Gear Set Ø180 MM .	680,00

Please observe: Repairing, modifying and testing of electro-tools are to be performed professionally.The safety regulations according to IEC, EN, VDE, AFNOR and other regulations of the individual countries are to be observed. Subject to change.
This price list supersedes all previous edition. Prices are subjected to change without any prior notice.

3 601 HC0 080
Stand / Issue } 19-11-21 **Fig. /Abb. 2**

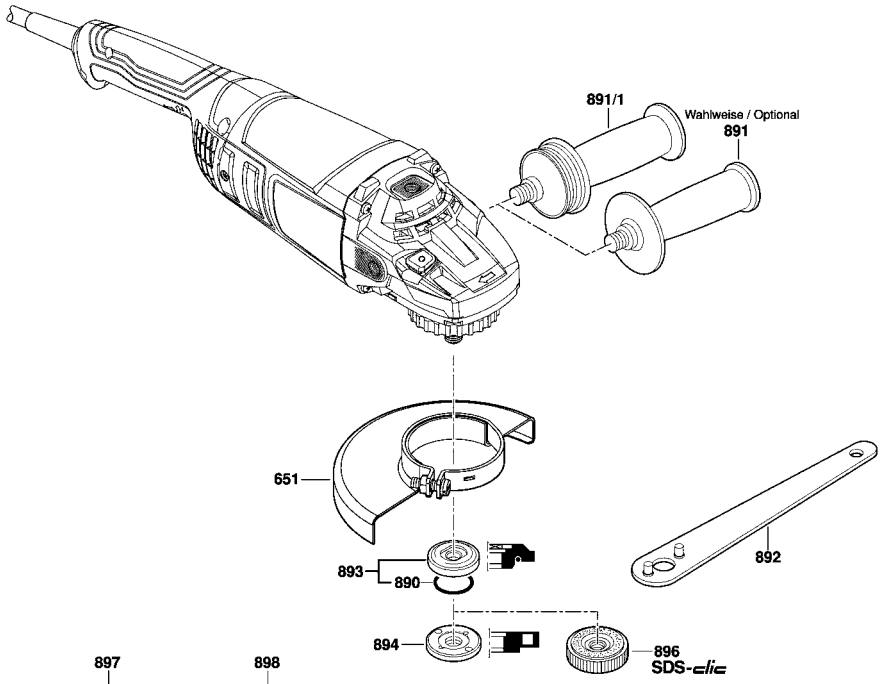

Änderungen vorbehalten
Modifications reserved
Modifications réservées
Salvo modificaciones

Model: 3 601 HC0 0F0 = 230 | Date:

Item	Pc	Order no.	Description	LP in INR	Item	Pc	Order no.	Description	LP in INR
835	1	1 600 A00 J93	Fan .	81,00					
840	1	1 619 P15 752	Push-Button .	32,00					
846	1	1 607 000 342	Retaining Washer .	56,00					
882	1	1 619 P06 597	Stopper .	192,00					
890	1	1 600 210 039	O-Ring 20,35x1,78 MM .	30,00					
891	1	1 602 025 0A1	Auxiliary Handle .	623,00					
891/1	1	1 602 025 09Z	Auxiliary Handle .	639,00					
892	1	1 607 950 061	Pin-Type Face-Wrench .	65,00					
893	1	2 605 703 014	Clamping Flange	104,00					
894	1	1 603 345 043	Round Nut M14 .	110,00					
896	1	1 600 A01 6PP	Fast Locking Flange .	1.692,00					
897	1	1 605 430 003	Grease Tube 225 ML .	1.585,00					
898	1	1 615 430 020	Grease Tube 225 ML .	1.467,00					

Please observe: Repairing, modifying and testing of electro-tools are to be performed professionally.The safety regulations according to IEC, EN, VDE, AFNOR and other regulations of the individual countries are to be observed. Subject to change.
This price list supersedes all previous edition. Prices are subjected to change without any prior notice.

3 601 HC1 080
Stand ~~19-11~~
Issue 19-12-03

Fig. /Abb. 1

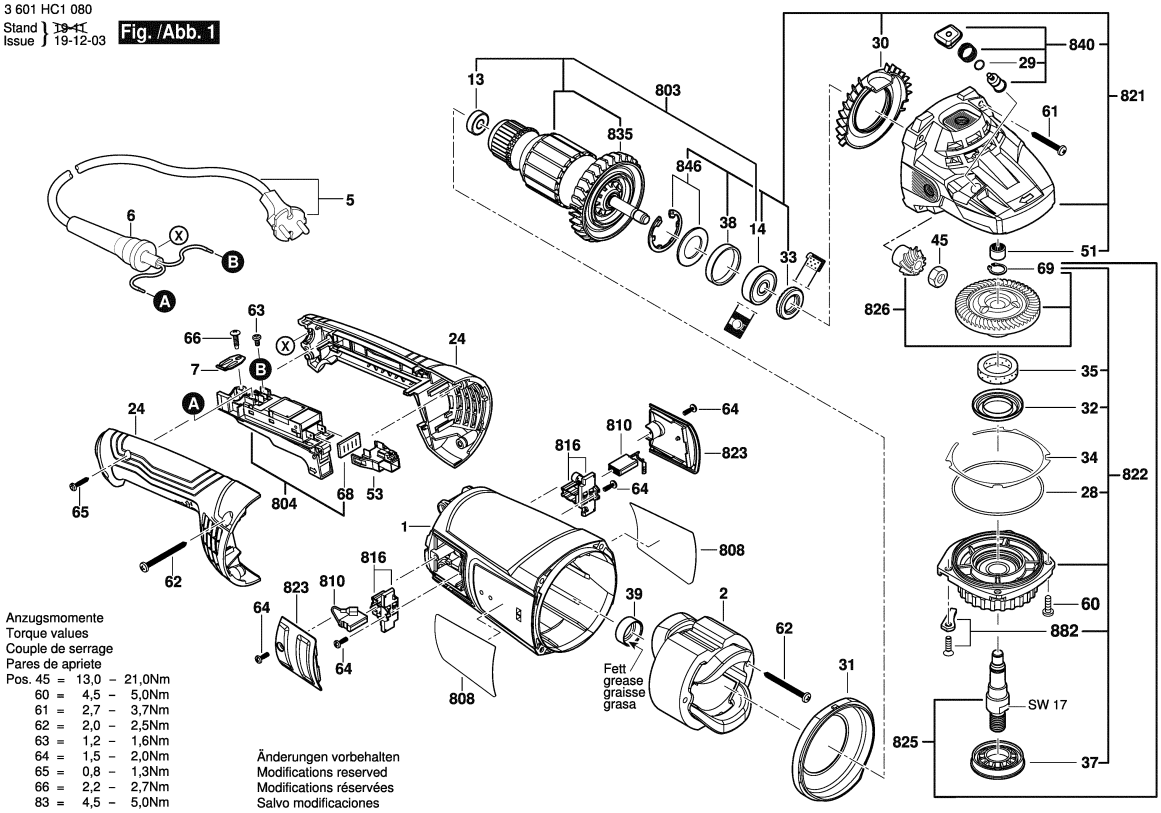

Anzugsmomente
Torque values
Couple de serrage
Pares de apriete

Pos. 45	=	13,0	–	21,0Nm
60	=	4,5	–	5,0Nm
61	=	2,7	–	3,7Nm
62	=	2,0	–	2,5Nm
63	=	1,2	–	1,6Nm
64	=	1,5	–	2,0Nm
65	=	0,8	–	1,3Nm
66	=	2,2	–	2,7Nm
83	=	4,5	–	5,0Nm

Änderungen vorbehalten
Modifications reserved
Modifications réservées
Salvo modificaciones

1 / 2

Model: 3 601 HC1 0F0 = 230 | Date:

Item	Pc	Order no.	Description	LP IN INR
1	1	1 605 108 2MU	Motor Housing .	
2	1	1 619 P15 702	Field .	1.047,00
5	1	F 002 G31 006	Power supply cord .	300,00
6	1	2 600 703 019	Grommet Ø8,7-Ø9,6x76	65,00
7	1	160 130 2018	. .	
7	1	1 601 302 018	Fastening Clamp .	51,00
13	1	1 600 905 011	groove ball bearing 8x22x7	106,00
14	1	1 600 905 028	groove ball bearing .	228,00
24	1	1 619 P15 272	Handle .	221,00
28	1	1 600 210 033	O-Ring 79,0x1,78 MM .	51,00
29	1	1 600 210 045	O-Ring 8,0x1,0 MM .	50,00
30	1	1 619 P15 274	Air Distributor .	39,00
31	1	1 600 591 07T	Air-Deflector Ring .	
32	1	1 600 290 019	Retaining snap ring .	47,00
33	1	1 600 290 013	Rotary shaft lip seal 18,7	74,00
34	1	1 600 190 022	Shim 0,1 MM THICK	53,00
34	1	1 600 190 020	Shim 0,15 MM THICK	51,00
34	1	1 600 190 037	Shim 0,2 MM THICK	31,00
34	1	1 600 190 038	Shim 0,25 MM THICK	31,00
34	1	1 600 190 021	Shim 0,3 MM THICK	51,00
34	1	1 600 190 039	Shim 0,35 MM THICK	31,00
34	1	1 600 190 040	Shim 0,4 MM THICK	31,00
35	1	1 600 205 034	Felt Washer .	51,00
37	1	1 600 290 036	Seal Ring BLACK	74,00

Item	Pc	Order no.	Description	LP IN INR
38	1	1 600 206 020	Rubber Ring 7 MM WIDE	50,00
39	1	1 600 206 030	Rubber Ring .	46,00
45	1	1 603 300 019	Hex Nut M10, SW14 .	50,00
51	1	2 600 910 001	Needle-Roller Bearing Ø14	58,00
53	1	1 605 190 068	Socket Housing .	50,00
60	3	1 603 435 023	Thread-forming tap. Screw	47,00
61	4	2 912 401 038	Tapping Screw DIN	31,00
62	2	1 603 435 060	Tapping Screw 4,8x55 .	30,00
63	2	1 603 410 014	Pan head screw M4x10 MM	50,00
64	4	1 603 435 042	Plastic-Cutting Screw	50,00
65	4	2 912 401 020	Tapping Screw DIN	31,00
66	1	2 910 211 019	Tapping Screw DIN	31,00
68	1	1 601 006 011	Sealing Plate .	50,00
69	1	2 916 650 905	Spring retaining ring .	29,00
651	1	1 619 P15 668	Protective Cover Ø230 MM	373,00
803	1	1 619 P15 749	Armature .	1.498,00
804	1	1 619 P14 186	Switch .	297,00
810	1	1 607 014 171	Carbon-Brush Set .	267,00
816	2	1 604 336 048	Brush Holder .	164,00
821	1	1 619 P15 750	Gear Housing .	823,00
822	1	1 619 P15 872	Bearing Flange Ø 230MM .	632,00
823	1	1 619 P15 945	Sealing cap .	48,00
825	1	1 619 P15 297	Grinding Spindle .	369,00
826	1	1 619 P15 388	Bevel Gear Set Ø230 MM .	1.245,00

Please observe: Repairing, modifying and testing of electro-tools are to be performed professionally.The safety regulations according to IEC, EN, VDE, AFNOR and other regulations of the individual countries are to be observed. Subject to change.
This price list supersedes all previous edition. Prices are subjected to change without any prior notice.

3 601 HC1 080
Stand / Issue 19-11-21 **Fig. /Abb. 2**

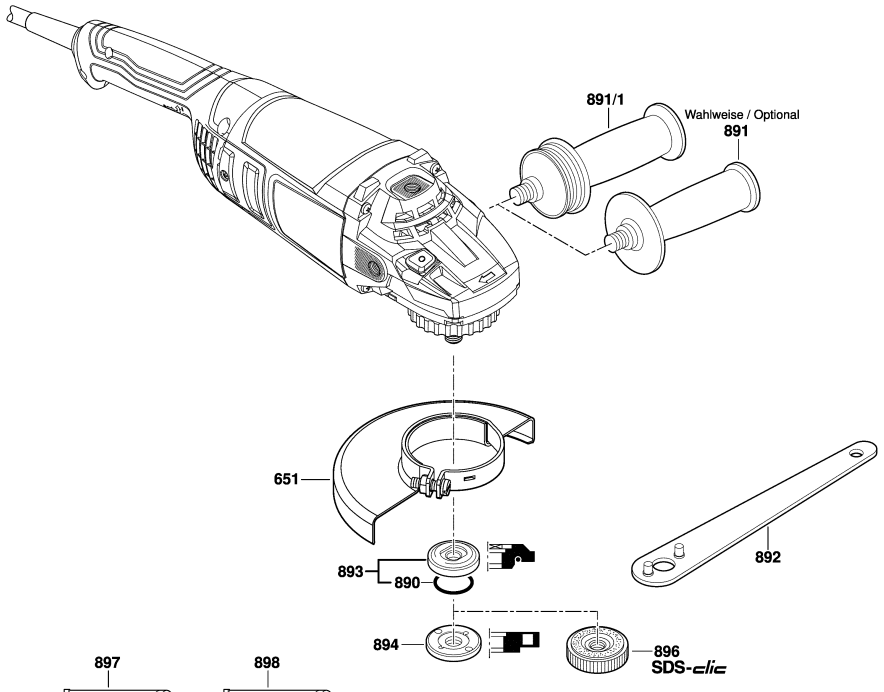

Änderungen vorbehalten
Modifications reserved
Modifications réservées
Salvo modificaciones

2 / 2

Model: 3 601 HC1 0F0 = 230 | Date:

Item	Pc	Order no.	Description	LP IN INR	Item	Pc	Order no.	Description	LP IN INR
835	1	1 600 A00 J93	Fan .	81,00					
840	1	1 619 P15 752	Push-Button .	32,00					
846	1	1 607 000 342	Retaining Washer .	56,00					
882	1	1 619 P06 597	Stopper .	192,00					
890	1	1 600 210 039	O-Ring 20,35x1,78 MM .	30,00					
891	1	1 602 025 0A1	Auxiliary Handle .	623,00					
891/1	1	1 602 025 09Z	Auxiliary Handle .	639,00					
892	1	1 607 950 061	Pin-Type Face-Wrench .	65,00					
893	1	2 605 703 014	Clamping Flange	104,00					
894	1	1 603 345 043	Round Nut M14 .	110,00					
896	1	1 600 A01 6PP	Fast Locking Flange .	1.692,00					
897	1	1 605 430 003	Grease Tube 225 ML .	1.585,00					
898	1	1 615 430 020	Grease Tube 225 ML .	1.467,00					

Please observe: Repairing, modifying and testing of electro-tools are to be performed professionally.The safety regulations according to IEC, EN, VDE, AFNOR and other regulations of the individual countries are to be observed. Subject to change.
This price list supersedes all previous edition. Prices are subjected to change without any prior notice.

0 601 853 403
Stand } 08-12
Issue } 14-11-10

Fig. /Abb. 1

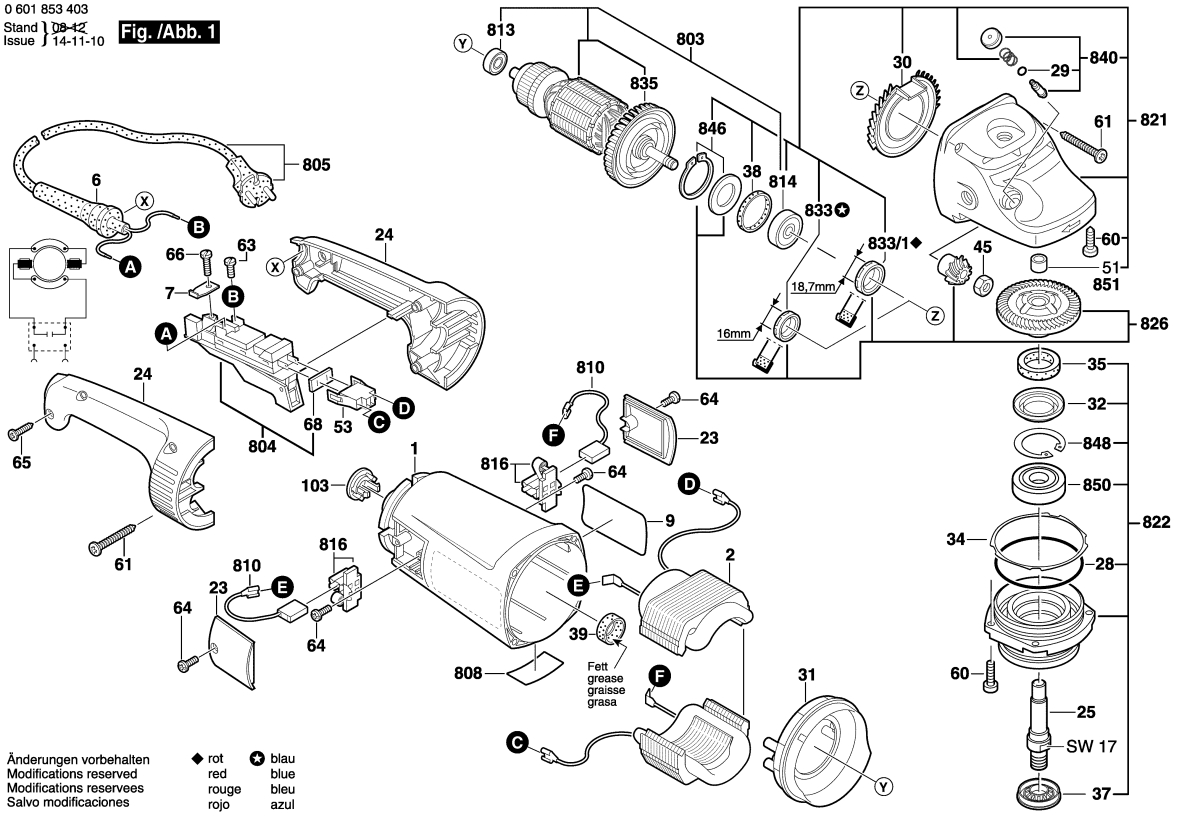

1 / 2

Model: 0 601 853 4X0 | Date:

Item	Pc	Order no.	Description	LP IN INR
1	1	1 605 108 190	Motor Housing BLUE	629,00
2	1	1 604 220 57K	Field .	1.897,00
6	1	1 600 703 023	Grommet Ø	30,00
7	1	1 601 302 018	Fastening Clamp .	51,00
23	2	1 618 B00 802	Sealing cap .	34,00
24	1	1 605 132 141	Handle BLUE	369,00
25	1	1 619 P15 297	Grinding Spindle .	369,00
28	1	1 600 210 033	O-Ring 79,0x1,78 MM .	51,00
29	1	1 600 210 045	O-Ring 8,0x1,0 MM .	50,00
30	1	1 600 591 029	Air Distributor .	69,00
31	1	1 600 591 075	Air-Deflector Ring .	103,00
32	1	1 600 290 019	Retaining snap ring .	47,00
34	1	1 600 190 020	Shim 0,15 MM THICK	51,00
34	1	1 600 190 021	Shim 0,3 MM THICK	51,00
34	1	1 600 190 022	Shim 0,1 MM THICK	53,00
34	1	1 600 190 037	Shim 0,2 MM THICK	31,00
34	1	1 600 190 038	Shim 0,25 MM THICK	31,00
34	1	1 600 190 039	Shim 0,35 MM THICK	31,00
34	1	1 600 190 040	Shim 0,4 MM THICK	31,00
35	1	1 600 205 034	Felt Washer .	51,00
37	1	1 600 290 036	Seal Ring BLACK	74,00
38	1	1 600 206 020	Rubber Ring 7 MM WIDE	50,00
39	1	1 600 206 030	Rubber Ring .	46,00
45	1	1 603 300 019	Hex Nut M10, SW14 .	50,00

Item	Pc	Order no.	Description	LP IN INR
53	1	1 605 190 068	Socket Housing .	50,00
60	4	1 603 435 023	Thread-forming tap. Screw	47,00
61	6	2 912 401 038	Tapping Screw DIN	31,00
63	2	1 603 410 014	Pan head screw M4x10 MM	50,00
64	4	1 603 435 042	Plastic-Cutting Screw	50,00
65	2	2 912 401 020	Tapping Screw DIN	31,00
66	1	2 910 211 019	Tapping Screw DIN	31,00
68	1	1 601 006 011	Sealing Plate .	50,00
103	1	1 602 388 035	Cable routing .	42,00
651	1	1 600 A00 XL9	Protective Cover Ø180 MM	312,00
803	1	1 604 010 BC1	Armature .	3.126,00
804	1	1 607 000 967	Switch BLACK	955,00
805	1	F 002 G31 007	Mains Cable .	819,00
810	1	1 607 014 171	Carbon-Brush Set .	267,00
813	1	1 600 905 011	groove ball bearing 8x22x7	106,00
814	1	1 600 905 028	groove ball bearing .	228,00
816	2	1 604 336 048	Brush Holder .	164,00
821	1	1 607 000 C03	Gear Housing .	1.882,00
822	1	1 607 000 C04	Bearing Flange Ø180 MM .	1.099,00
826	1	1 600 A00 3FR	Parts Set .	2.127,00
833	1	1 600 290 064	Rotary shaft lip seal 16 MM	86,00
833/1	1	1 600 290 013	Rotary shaft lip seal 18,7	74,00
835	1	1 600 A00 J93	Fan .	81,00
840	1	1 607 000 354	Push-Button .	228,00

Please observe: Repairing, modifying and testing of electro-tools are to be performed professionally.The safety regulations according to IEC, EN, VDE, AFNOR and other regulations of the individual countries are to be observed. Subject to change.
This price list supersedes all previous edition. Prices are subjected to change without any prior notice.

0 601 853 403
Stand } 01-09
Issue } 08-01-17

Fig. /Abb. 2

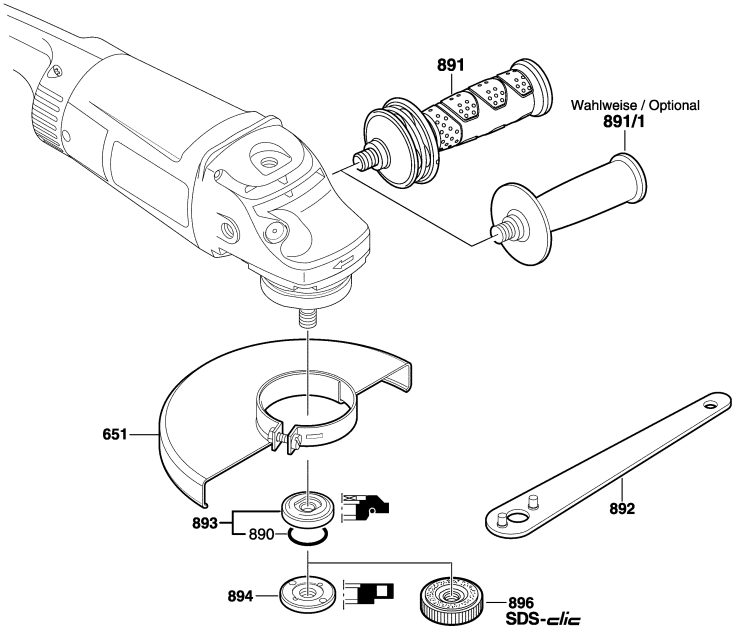

Änderungen vorbehalten
Modifications reserved
Modifications reservees
Salvo modificaciones

Model: 0 601 853 4X0 | Date:

Item	Pc	Order no.	Description	LP IN INR	Item	Pc	Order no.	Description	LP IN INR
846	1	1 607 000 C3E	Retaining Washer .	74,00					
848	1	1 600 119 010	Spring retaining ring .	51,00					
850	1	1 600 905 026	groove ball bearing	120,00					
851	1	2 600 910 001	Needle-Roller Bearing Ø14	58,00					
890	1	1 600 210 039	O-Ring 20,35x1,78 MM .	30,00					
891	1	1 602 025 051	Auxiliary Handle M14	1.138,00					
891/1	1	1 602 025 0A1	Auxiliary Handle .	623,00					
892	1	1 607 950 061	Pin-Type Face-Wrench .	65,00					
893	1	2 605 703 014	Clamping Flange	104,00					
894	1	1 603 345 043	Round Nut M14 .	110,00					
896	1	1 600 A01 6PP	Fast Locking Flange .	1.692,00					

Please observe: Repairing, modifying and testing of electro-tools are to be performed professionally.The safety regulations according to IEC, EN, VDE, AFNOR and other regulations of the individual countries are to be observed. Subject to change.
This price list supersedes all previous edition. Prices are subjected to change without any prior notice.

BOSCH Power Tools	Angle Grinder	Model GWS 24-180 3 601 HC2 0F0 | BO

3 601 HC2 080
Stand } 20-11
Issue } 20-12-01

Fig. /Abb. 1

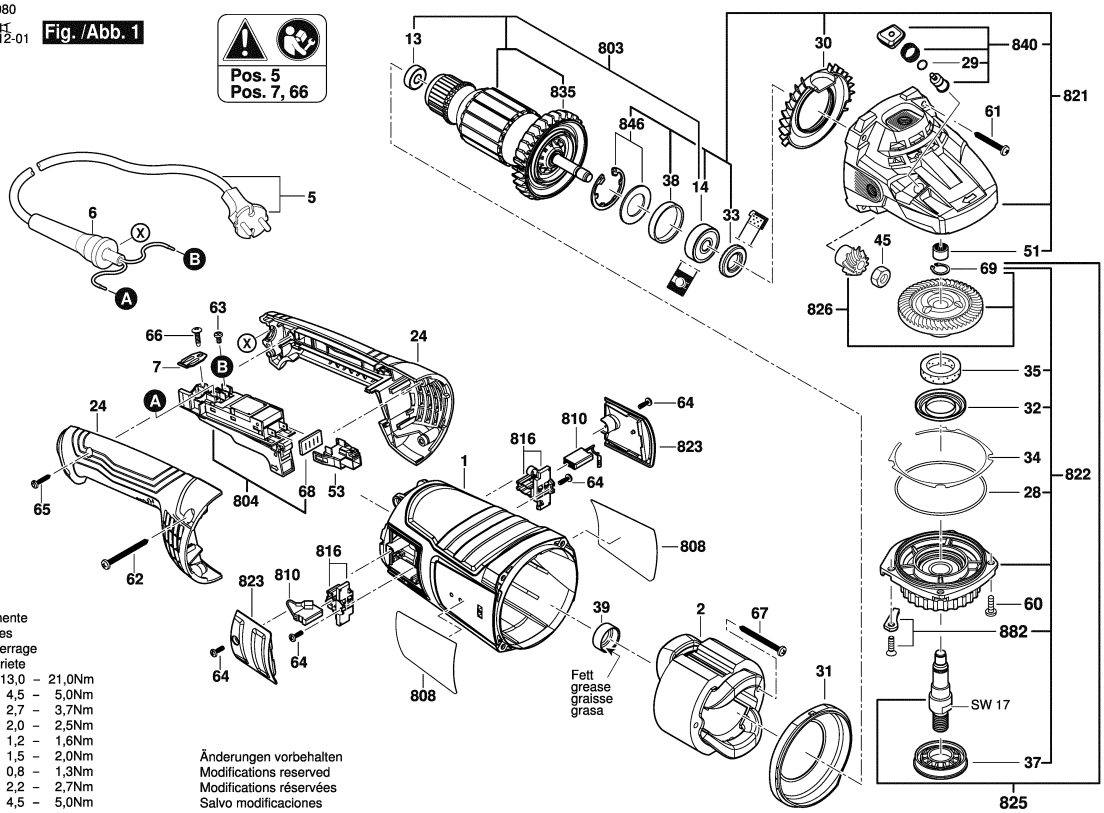

Anzugsmomente
Torque values
Couple de serrage
Pares de apriete

Pos. 45	=	13,0	–	21,0Nm
60	=	4,5	–	5,0Nm
61	=	2,7	–	3,7Nm
62	=	2,0	–	2,5Nm
63	=	1,2	–	1,6Nm
64	=	1,5	–	2,0Nm
65	=	0,8	–	1,3Nm
66	=	2,2	–	2,7Nm
83	=	4,5	–	5,0Nm

Änderungen vorbehalten
Modifications reserved
Modifications réservées
Salvo modificaciones

Model: 3 601 HC2 0F0 = 230 | Date:

Item	Pc	Order no.	Description	LP IN INR
1	1	1 619 P15 457	Motor Housing .	724,00
2	1	1 619 P14 999	Field .	1.893,00
5	1	F 002 G31 007	Mains Cable .	819,00
6	1	2 600 703 019	Grommet Ø8,7-Ø9,6x76	65,00
7	1	160 130 2018	. .	
7	1	1 601 302 018	Fastening Clamp .	51,00
13	1	1 600 905 011	groove ball bearing 8x22x7	106,00
14	1	1 600 905 028	groove ball bearing .	228,00
24	1	1 619 P15 273	Handle .	490,00
28	1	1 600 210 033	O-Ring 79,0x1,78 MM .	51,00
29	1	1 600 210 045	O-Ring 8,0x1,0 MM .	50,00
30	1	1 619 P15 274	Air Distributor .	39,00
31	1	1 600 591 07T	Air-Deflector Ring .	
32	1	1 600 290 019	Retaining snap ring .	47,00
33	1	1 600 290 013	Rotary shaft lip seal 18,7	74,00
34	1	1 600 190 022	Shim 0,1 MM THICK	53,00
34	1	1 600 190 020	Shim 0,15 MM THICK	51,00
34	1	1 600 190 037	Shim 0,2 MM THICK	31,00
34	1	1 600 190 038	Shim 0,25 MM THICK	31,00
34	1	1 600 190 021	Shim 0,3 MM THICK	51,00
34	1	1 600 190 039	Shim 0,35 MM THICK	31,00
34	1	1 600 190 040	Shim 0,4 MM THICK	31,00
35	1	1 600 205 034	Felt Washer .	51,00
37	1	1 600 290 036	Seal Ring BLACK	74,00

Item	Pc	Order no.	Description	LP IN INR
38	1	1 600 206 020	Rubber Ring 7 MM WIDE	50,00
39	1	1 600 206 030	Rubber Ring .	46,00
45	1	1 603 300 019	Hex Nut M10, SW14 .	50,00
51	1	2 600 910 001	Needle-Roller Bearing Ø14	58,00
53	1	1 605 190 068	Socket Housing .	50,00
60	3	1 603 435 023	Thread-forming tap. Screw	47,00
61	4	2 912 401 038	Tapping Screw DIN	31,00
62	2	1 603 435 060	Tapping Screw 4,8x55 .	30,00
63	2	1 603 410 014	Pan head screw M4x10 MM	50,00
64	4	1 603 435 042	Plastic-Cutting Screw	50,00
65	4	2 912 401 020	Tapping Screw DIN	31,00
66	1	2 910 211 019	Tapping Screw DIN	31,00
67	2	1 603 435 024	Tapping Screw C4,8x63	54,00
68	1	1 601 006 011	Sealing Plate .	50,00
69	1	2 916 650 905	Spring retaining ring .	29,00
651	1	1 619 P15 622	Protective Cover Ø180 MM	337,00
803	1	1 619 P16 541	Armature .	2.974,00
804	1	1 619 P14 968	Switch .	544,00
810	1	1 607 014 171	Carbon-Brush Set .	267,00
816	2	1 604 336 048	Brush Holder .	164,00
821	1	1 619 P15 750	Gear Housing .	823,00
822	1	1 619 P15 751	Bearing Flange Ø180 MM .	632,00
823	1	1 619 P15 945	Sealing cap .	48,00
825	1	1 619 P15 297	Grinding Spindle .	369,00

Please observe: Repairing, modifying and testing of electro-tools are to be performed professionally.The safety regulations according to IEC, EN, VDE, AFNOR and other regulations of the individual countries are to be observed. Subject to change.
This price list supersedes all previous edition. Prices are subjected to change without any prior notice.

3 601 HC2 080
Stand / Issue 20-11-26 **Fig. /Abb. 2**

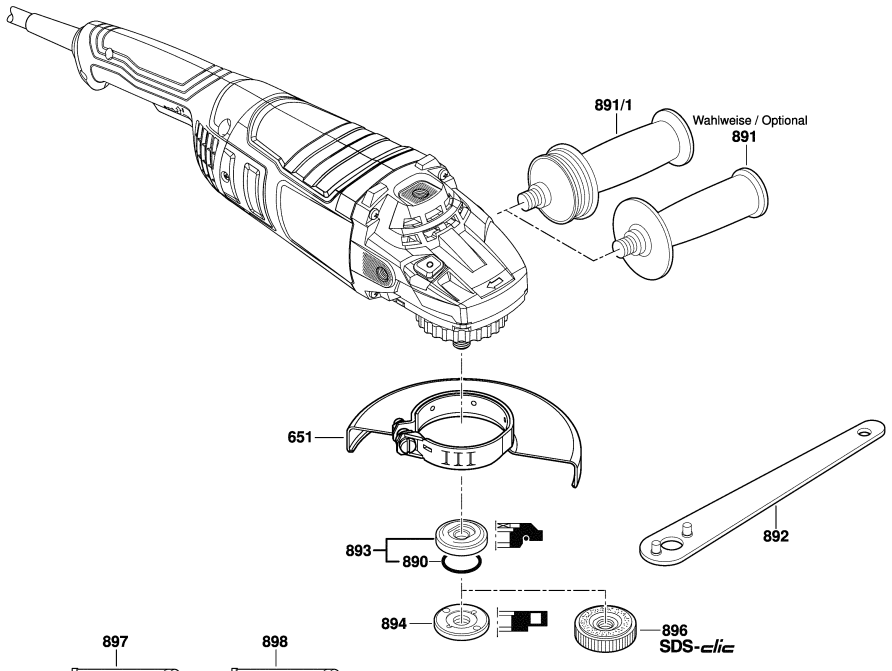

Änderungen vorbehalten
Modifications reserved
Modifications réservées
Salvo modificaciones

Model: 3 601 HC2 0F0 = 230 | Date:

Item	Pc	Order no.	Description	LP IN INR	Item	Pc	Order no.	Description	LP IN INR
826	1	1 619 P15 405	Bevel Gear Set Ø180 MM .	680,00					
835	1	1 600 A00 J93	Fan .	81,00					
840	1	1 619 P15 752	Push-Button .	32,00					
846	1	1 607 000 342	Retaining Washer .	56,00					
882	1	1 619 P06 597	Stopper .	192,00					
890	1	1 600 210 039	O-Ring 20,35x1,78 MM .	30,00					
891	1	1 619 P09 013	Auxiliary Handle .	147,00					
891/1	1	1 602 025 09Z	Auxiliary Handle .	639,00					
892	1	1 607 950 061	Pin-Type Face-Wrench .	65,00					
893	1	2 605 703 014	Clamping Flange	104,00					
894	1	1 603 345 043	Round Nut M14 .	110,00					
897	1	1 605 430 003	Grease Tube 225 ML .	1.585,00					
898	1	1 615 430 020	Grease Tube 225 ML .	1.467,00					

Please observe: Repairing, modifying and testing of electro-tools are to be performed professionally.The safety regulations according to IEC, EN, VDE, AFNOR and other regulations of the individual countries are to be observed. Subject to change.
This price list supersedes all previous edition. Prices are subjected to change without any prior notice.

BOSCH Power Tools	Angle Grinder	Model GWS 24-180 JZ 3 601 HC2 3F0 | BO

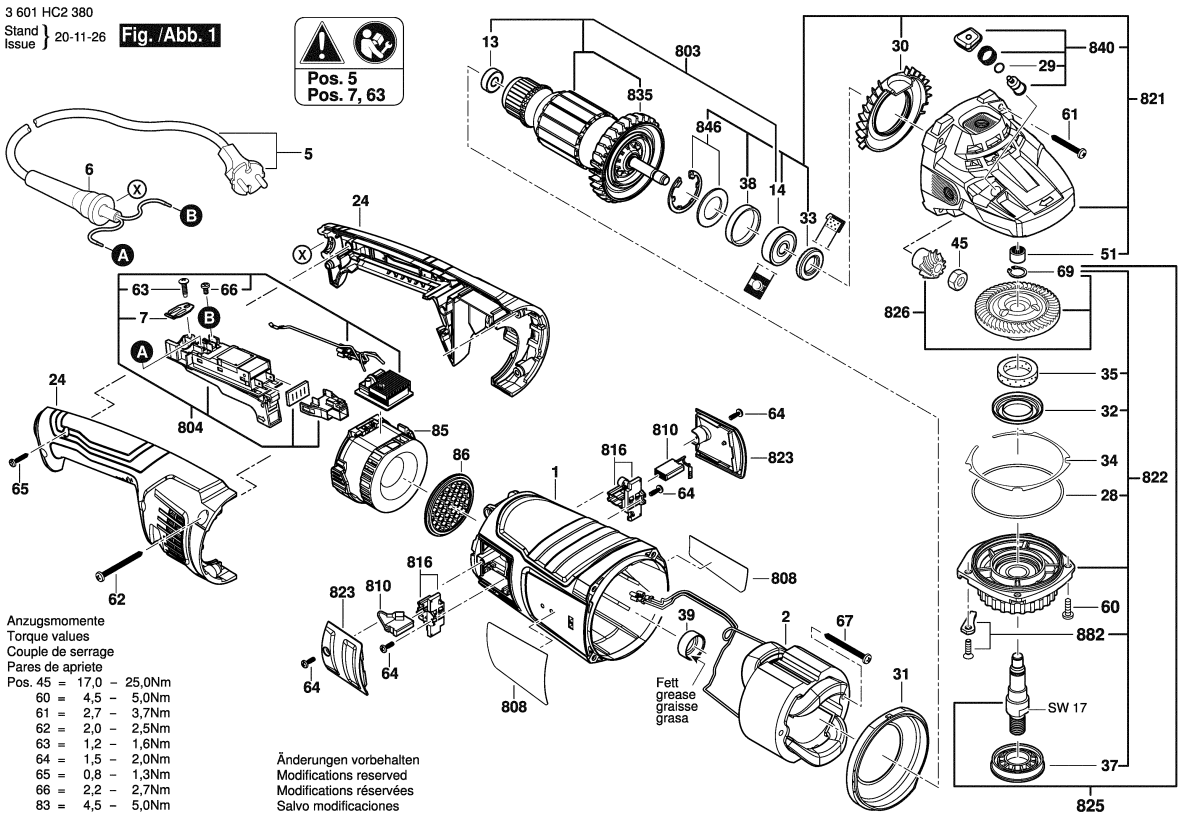

Model: 3 601 HC2 3F0 = 230 | Date:

Item	Pc	Order no.	Description	LP IN INR
1	1	1 619 P15 457	Motor Housing .	724,00
2	1	1 619 P14 999	Field .	1.893,00
5	1	F 002 G31 007	Mains Cable .	819,00
6	1	2 600 703 019	Grommet Ø8,7-Ø9,6x76	65,00
7	1	160 130 2018	. .	
7	1	1 601 302 018	Fastening Clamp .	51,00
13	1	1 600 905 011	groove ball bearing 8x22x7	106,00
14	1	1 600 905 028	groove ball bearing .	228,00
24	1	1 619 P16 039	Handle .	451,00
28	1	1 600 210 033	O-Ring 79,0x1,78 MM .	51,00
29	1	1 600 210 045	O-Ring 8,0x1,0 MM .	50,00
30	1	1 619 P15 274	Air Distributor .	39,00
31	1	1 600 591 07T	Air-Deflector Ring .	
32	1	1 600 290 019	Retaining snap ring .	47,00
33	1	1 600 290 064	Rotary shaft lip seal 16 MM	86,00
34	1	1 600 190 022	Shim 0,1 MM THICK	53,00
34	1	1 600 190 020	Shim 0,15 MM THICK	51,00
34	1	1 600 190 037	Shim 0,2 MM THICK	31,00
34	1	1 600 190 038	Shim 0,25 MM THICK	31,00
34	1	1 600 190 021	Shim 0,3 MM THICK	51,00
34	1	1 600 190 039	Shim 0,35 MM THICK	31,00
34	1	1 600 190 040	Shim 0,4 MM THICK	31,00
35	1	1 600 205 034	Felt Washer .	51,00
37	1	1 600 290 036	Seal Ring BLACK	74,00

Item	Pc	Order no.	Description	LP IN INR
38	1	1 600 206 020	Rubber Ring 7 MM WIDE	50,00
39	1	1 600 206 030	Rubber Ring .	46,00
45	1	1 603 300 019	Hex Nut M10, SW14 .	50,00
51	1	2 600 910 001	Needle-Roller Bearing Ø14	58,00
60	3	1 603 435 023	Thread-forming tap. Screw	47,00
61	4	2 912 401 038	Tapping Screw DIN	31,00
62	2	1 603 435 060	Tapping Screw 4,8x55 .	30,00
63	2	1 603 410 014	Pan head screw M4x10 MM	50,00
64	4	1 603 435 042	Plastic-Cutting Screw	50,00
65	4	2 912 401 020	Tapping Screw DIN	31,00
66	1	2 910 211 019	Tapping Screw DIN	31,00
67	2	1 603 435 024	Tapping Screw C4,8x63	54,00
69	1	2 916 650 905	Spring retaining ring .	29,00
85	1	1 619 P15 700	Dust Separator .	262,00
86	1	1 619 P16 040	Air Deflection .	143,00
651	1	1 619 P15 622	Protective Cover Ø180 MM	337,00
803	1	1 619 P16 541	Armature .	2.974,00
804	1	1 619 P16 542	Switch .	1.609,00
810	1	1 607 014 171	Carbon-Brush Set .	267,00
816	2	1 604 336 048	Brush Holder .	164,00
821	1	1 619 P15 871	Gear Housing .	1.999,00
822	1	1 619 P15 751	Bearing Flange Ø180 MM .	632,00
823	1	1 619 P15 945	Sealing cap .	48,00
825	1	1 619 P15 297	Grinding Spindle .	369,00

Please observe: Repairing, modifying and testing of electro-tools are to be performed professionally.The safety regulations according to IEC, EN, VDE, AFNOR and other regulations of the individual countries are to be observed. Subject to change.
This price list supersedes all previous edition. Prices are subjected to change without any prior notice.

3 601 HC2 380
Stand / Issue } 20-11-26 **Fig. /Abb. 2**

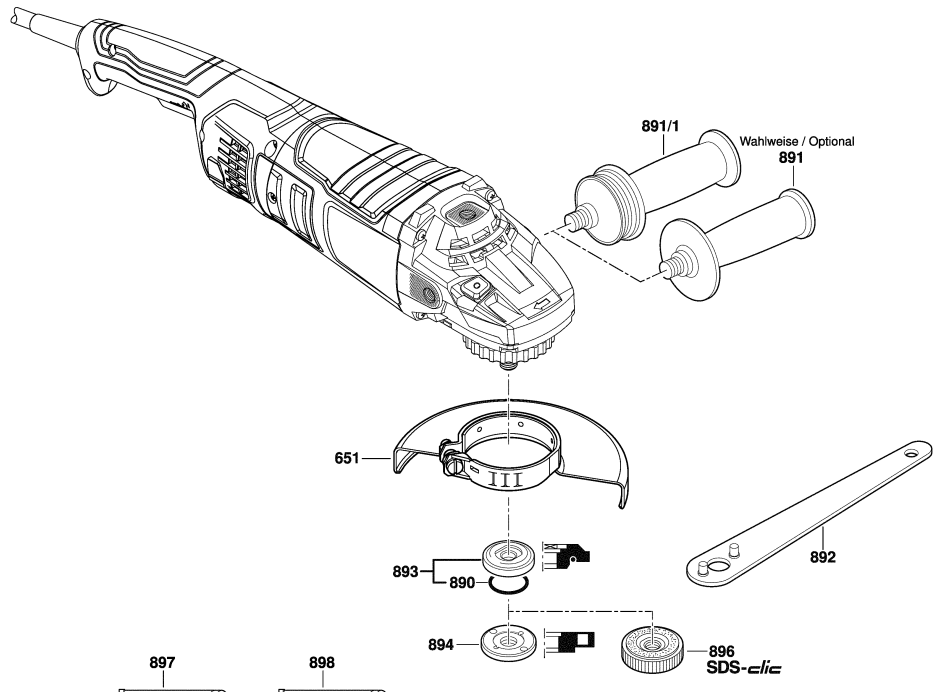

Änderungen vorbehalten
Modifications reserved
Modifications réservées
Salvo modificaciones

2 / 2

Model: 3 601 HC2 3F0 = 230 | Date:

Item	Pc	Order no.	Description	LP IN INR
826	1	1 607 000 CV0	Bevel Gear Set .	1.399,00
835	1	1 600 A00 J93	Fan .	81,00
840	1	1 619 P15 752	Push-Button .	32,00
846	1	1 607 000 342	Retaining Washer .	56,00
882	1	1 619 P06 597	Stopper .	192,00
890	1	1 600 210 039	O-Ring 20,35x1,78 MM .	30,00
891	1	1 619 P09 013	Auxiliary Handle .	147,00
891/1	1	1 602 025 09Z	Auxiliary Handle .	639,00
892	1	1 607 950 061	Pin-Type Face-Wrench .	65,00
893	1	2 605 703 014	Clamping Flange	104,00
894	1	1 603 345 043	Round Nut M14 .	110,00
896	1	1 600 A01 6PP	Fast Locking Flange .	1.692,00
897	1	1 605 430 003	Grease Tube 225 ML .	1.585,00
898	1	1 615 430 020	Grease Tube 225 ML .	1.467,00

Item	Pc	Order no.	Description	LP IN INR

Please observe: Repairing, modifying and testing of electro-tools are to be performed professionally.The safety regulations according to IEC, EN, VDE, AFNOR and other regulations of the individual countries are to be observed. Subject to change.
This price list supersedes all previous edition. Prices are subjected to change without any prior notice.

BOSCH Power Tools	Angle Grinder	Model GWS 24-230 3 601 HC3 0F0 | BO

3 601 HC2 080
Stand } 20-11
Issue } 20-12-01

Fig. /Abb. 1

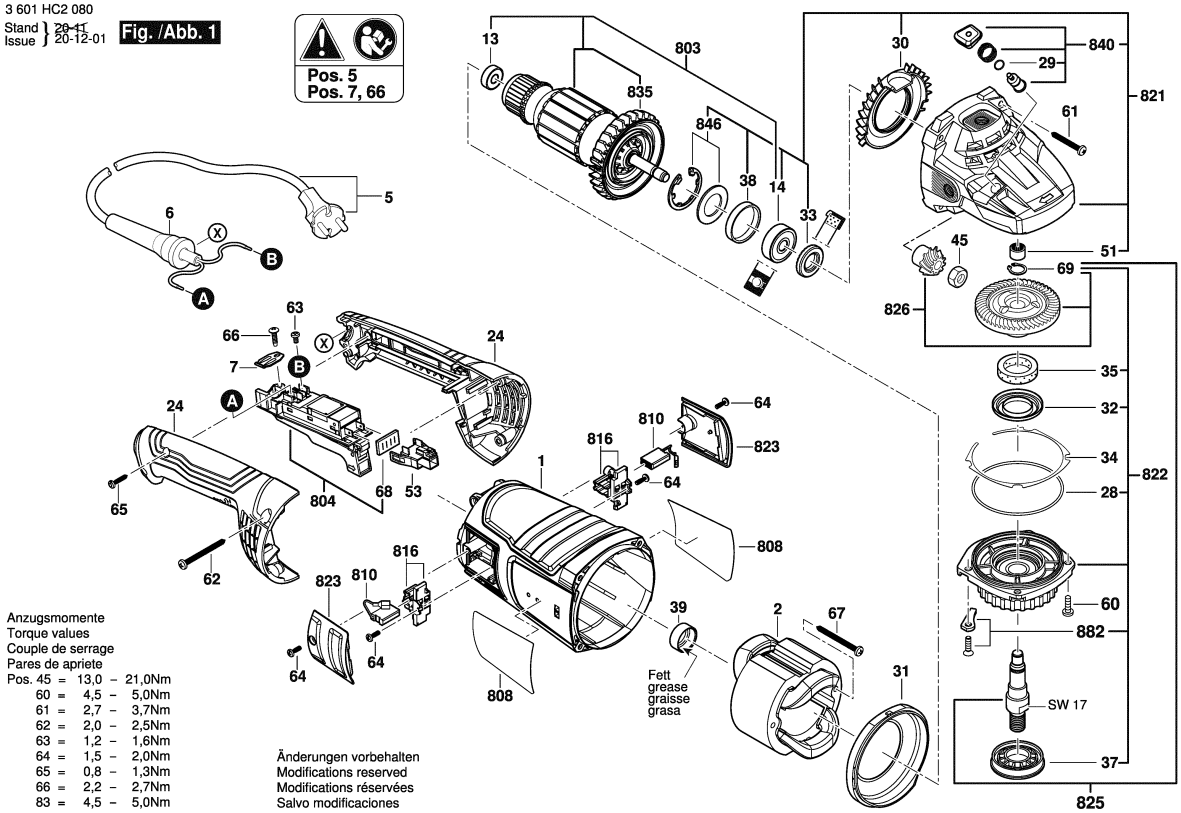

Anzugsmomente
Torque values
Couple de serrage
Pares de apriete

Pos. 45	=	13,0	–	21,0Nm
60	=	4,5	–	5,0Nm
61	=	2,7	–	3,7Nm
62	=	2,0	–	2,5Nm
63	=	1,2	–	1,6Nm
64	=	1,5	–	2,0Nm
65	=	0,8	–	1,3Nm
66	=	2,2	–	2,7Nm
83	=	4,5	–	5,0Nm

Änderungen vorbehalten
Modifications reserved
Modifications réservées
Salvo modificaciones

Model: 3 601 HC3 0F0 = 230 | Date:

Item	Pc	Order no.	Description	LP IN INR
1	1	1 619 P15 457	Motor Housing .	724,00
2	1	1 619 P14 999	Field .	1.893,00
5	1	F 002 G31 007	Mains Cable .	819,00
6	1	2 600 703 019	Grommet Ø8,7-Ø9,6x76	65,00
7	1	160 130 2018	. .	
7	1	1 601 302 018	Fastening Clamp .	51,00
13	1	1 600 905 011	groove ball bearing 8x22x7	106,00
14	1	1 600 905 028	groove ball bearing .	228,00
24	1	1 619 P15 273	Handle .	490,00
28	1	1 600 210 033	O-Ring 79,0x1,78 MM .	51,00
29	1	1 600 210 045	O-Ring 8,0x1,0 MM .	50,00
30	1	1 619 P15 274	Air Distributor .	39,00
31	1	1 600 591 07T	Air-Deflector Ring .	
32	1	1 600 290 019	Retaining snap ring .	47,00
33	1	1 600 290 013	Rotary shaft lip seal 18,7	74,00
34	1	1 600 190 022	Shim 0,1 MM THICK	53,00
34	1	1 600 190 020	Shim 0,15 MM THICK	51,00
34	1	1 600 190 037	Shim 0,2 MM THICK	31,00
34	1	1 600 190 038	Shim 0,25 MM THICK	31,00
34	1	1 600 190 021	Shim 0,3 MM THICK	51,00
34	1	1 600 190 039	Shim 0,35 MM THICK	31,00
34	1	1 600 190 040	Shim 0,4 MM THICK	31,00
35	1	1 600 205 034	Felt Washer .	51,00
37	1	1 600 290 036	Seal Ring BLACK	74,00

Item	Pc	Order no.	Description	LP IN INR
38	1	1 600 206 020	Rubber Ring 7 MM WIDE	50,00
39	1	1 600 206 030	Rubber Ring .	46,00
45	1	1 603 300 019	Hex Nut M10, SW14 .	50,00
51	1	2 600 910 001	Needle-Roller Bearing Ø14	58,00
53	1	1 605 190 068	Socket Housing .	50,00
60	3	1 603 435 023	Thread-forming tap. Screw	47,00
61	4	2 912 401 038	Tapping Screw DIN	31,00
62	2	1 603 435 060	Tapping Screw 4,8x55 .	30,00
63	2	1 603 410 014	Pan head screw M4x10 MM	50,00
64	4	1 603 435 042	Plastic-Cutting Screw	50,00
65	4	2 912 401 020	Tapping Screw DIN	31,00
66	1	2 910 211 019	Tapping Screw DIN	31,00
67	2	1 603 435 024	Tapping Screw C4,8x63	54,00
68	1	1 601 006 011	Sealing Plate .	50,00
69	1	2 916 650 905	Spring retaining ring .	29,00
651	1	1 619 P15 668	Protective Cover Ø230 MM	373,00
803	1	1 619 P16 541	Armature .	2.974,00
804	1	1 619 P14 968	Switch .	544,00
810	1	1 607 014 171	Carbon-Brush Set .	267,00
816	2	1 604 336 048	Brush Holder .	164,00
821	1	1 619 P15 750	Gear Housing .	823,00
822	1	1 619 P15 872	Bearing Flange Ø 230MM .	632,00
823	1	1 619 P15 945	Sealing cap .	48,00
825	1	1 619 P15 297	Grinding Spindle .	369,00

Please observe: Repairing, modifying and testing of electro-tools are to be performed professionally.The safety regulations according to IEC, EN, VDE, AFNOR and other regulations of the individual countries are to be observed. Subject to change.
This price list supersedes all previous edition. Prices are subjected to change without any prior notice.

3 601 HC2 080
Stand / Issue } 20-11-26 **Fig. /Abb. 2**

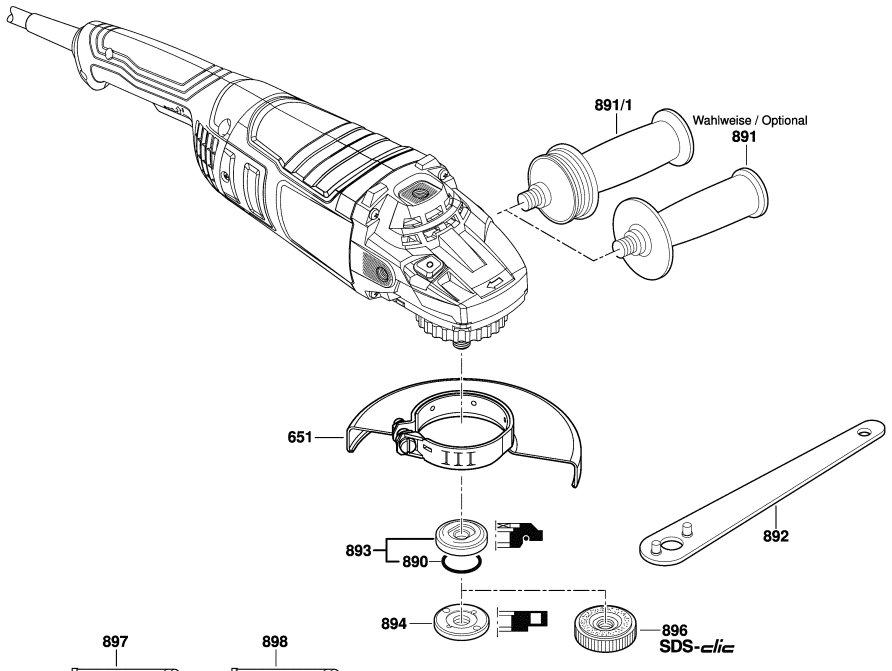

Änderungen vorbehalten
Modifications reserved
Modifications réservées
Salvo modificaciones

Model: 3 601 HC3 0F0 = 230 | Date:

Item	Pc	Order no.	Description	LP IN INR	Item	Pc	Order no.	Description	LP IN INR
826	1	1 619 P15 388	Bevel Gear Set Ø230 MM .	1.245,00					
835	1	1 600 A00 J93	Fan .	81,00					
840	1	1 619 P15 752	Push-Button .	32,00					
846	1	1 607 000 342	Retaining Washer .	56,00					
882	1	1 619 P06 597	Stopper .	192,00					
890	1	1 600 210 039	O-Ring 20,35x1,78 MM .	30,00					
891	1	1 619 P09 013	Auxiliary Handle .	147,00					
891/1	1	1 602 025 09Z	Auxiliary Handle .	639,00					
892	1	1 607 950 061	Pin-Type Face-Wrench .	65,00					
893	1	2 605 703 014	Clamping Flange	104,00					
894	1	1 603 345 043	Round Nut M14 .	110,00					
896	1	1 600 A01 6PP	Fast Locking Flange .	1.692,00					
897	1	1 605 430 003	Grease Tube 225 ML .	1.585,00					
898	1	1 615 430 020	Grease Tube 225 ML .	1.467,00					

Please observe: Repairing, modifying and testing of electro-tools are to be performed professionally.The safety regulations according to IEC, EN, VDE, AFNOR and other regulations of the individual countries are to be observed. Subject to change.
This price list supersedes all previous edition. Prices are subjected to change without any prior notice.

BOSCH Power Tools	Angle Grinder	Model GWS 24-230 JZ 3 601 HC3 3F0 | BO

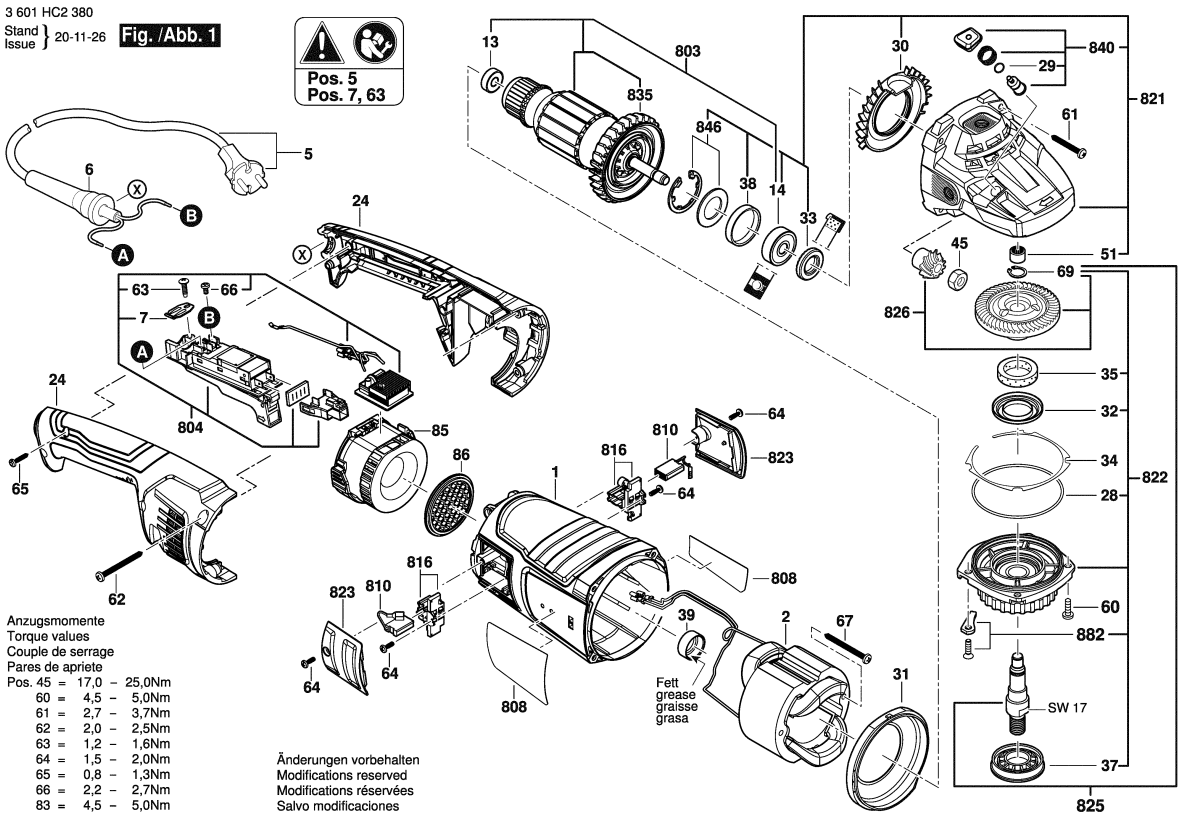

Model: 3 601 HC3 3F0 = 230 | Date:

Item	Pc	Order no.	Description	LP IN INR
1	1	1 619 P15 457	Motor Housing .	724,00
2	1	1 619 P14 999	Field .	1.893,00
5	1	F 002 G31 007	Mains Cable .	819,00
6	1	2 600 703 019	Grommet Ø8,7-Ø9,6x76	65,00
7	1	160 130 2018	. .	
7	1	1 601 302 018	Fastening Clamp .	51,00
13	1	1 600 905 011	groove ball bearing 8x22x7	106,00
14	1	1 600 905 028	groove ball bearing .	228,00
24	1	1 619 P16 039	Handle .	451,00
28	1	1 600 210 033	O-Ring 79,0x1,78 MM .	51,00
29	1	1 600 210 045	O-Ring 8,0x1,0 MM .	50,00
30	1	1 619 P15 274	Air Distributor .	39,00
31	1	1 600 591 07T	Air-Deflector Ring .	
32	1	1 600 290 019	Retaining snap ring .	47,00
33	1	1 600 290 064	Rotary shaft lip seal 16 MM	86,00
34	1	1 600 190 022	Shim 0,1 MM THICK	53,00
34	1	1 600 190 020	Shim 0,15 MM THICK	51,00
34	1	1 600 190 037	Shim 0,2 MM THICK	31,00
34	1	1 600 190 038	Shim 0,25 MM THICK	31,00
34	1	1 600 190 021	Shim 0,3 MM THICK	51,00
34	1	1 600 190 039	Shim 0,35 MM THICK	31,00
34	1	1 600 190 040	Shim 0,4 MM THICK	31,00
35	1	1 600 205 034	Felt Washer .	51,00
37	1	1 600 290 036	Seal Ring BLACK	74,00

Item	Pc	Order no.	Description	LP IN INR
38	1	1 600 206 020	Rubber Ring 7 MM WIDE	50,00
39	1	1 600 206 030	Rubber Ring .	46,00
45	1	1 603 300 019	Hex Nut M10, SW14 .	50,00
51	1	2 600 910 001	Needle-Roller Bearing Ø14	58,00
60	3	1 603 435 023	Thread-forming tap. Screw	47,00
61	4	2 912 401 038	Tapping Screw DIN	31,00
62	2	1 603 435 060	Tapping Screw 4,8x55 .	30,00
63	2	1 603 410 014	Pan head screw M4x10 MM	50,00
64	4	1 603 435 042	Plastic-Cutting Screw	50,00
65	4	2 912 401 020	Tapping Screw DIN	31,00
66	1	2 910 211 019	Tapping Screw DIN	31,00
67	2	1 603 435 024	Tapping Screw C4,8x63	54,00
69	1	2 916 650 905	Spring retaining ring .	29,00
85	1	1 619 P15 700	Dust Separator .	262,00
86	1	1 619 P16 040	Air Deflection .	143,00
651	1	1 619 P15 668	Protective Cover Ø230 MM	373,00
803	1	1 619 P16 541	Armature .	2.974,00
804	1	1 619 P16 542	Switch .	1.609,00
810	1	1 607 014 171	Carbon-Brush Set .	267,00
816	2	1 604 336 048	Brush Holder .	164,00
821	1	1 619 P15 871	Gear Housing .	1.999,00
822	1	1 619 P15 872	Bearing Flange Ø 230MM .	632,00
823	1	1 619 P15 945	Sealing cap .	48,00
825	1	1 619 P15 297	Grinding Spindle .	369,00

Please observe: Repairing, modifying and testing of electro-tools are to be performed professionally.The safety regulations according to IEC, EN, VDE, AFNOR and other regulations of the individual countries are to be observed. Subject to change.
This price list supersedes all previous edition. Prices are subjected to change without any prior notice.

3 601 HC2 380
Stand / Issue 20-11-26 **Fig. /Abb. 2**

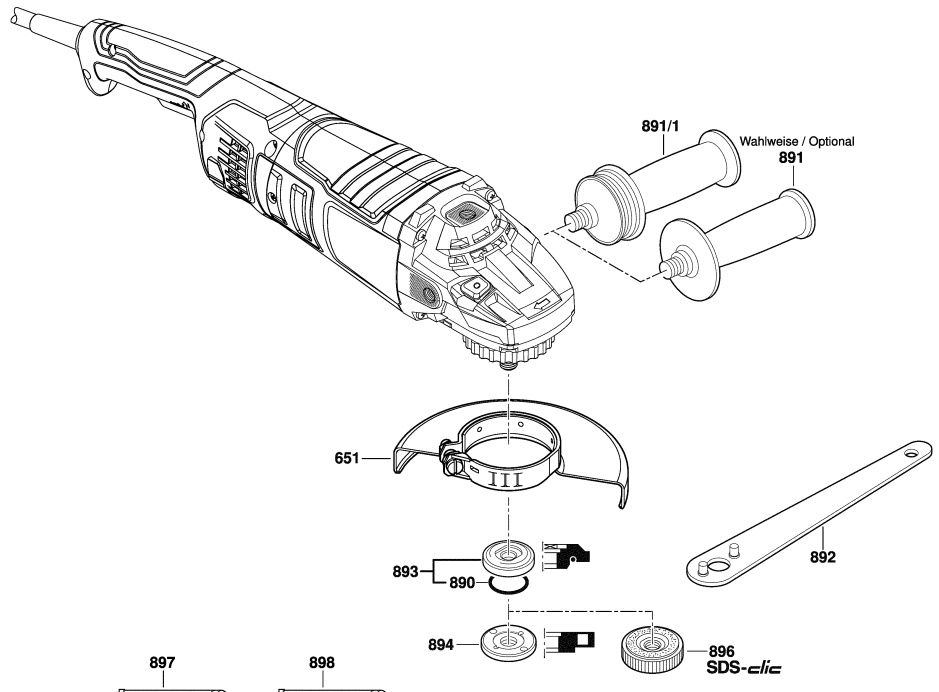

Änderungen vorbehalten
Modifications reserved
Modifications réservées
Salvo modificaciones

Model: 3 601 HC3 3F0 = 230 | Date:

Item	Pc	Order no.	Description	LP IN INR	Item	Pc	Order no.	Description	LP IN INR
826	1	1 619 P15 948	Bevel Gear Set 230 .	1.816,00					
835	1	1 600 A00 J93	Fan .	81,00					
840	1	1 619 P15 752	Push-Button .	32,00					
846	1	1 607 000 342	Retaining Washer .	56,00					
882	1	1 619 P06 597	Stopper .	192,00					
890	1	1 600 210 039	O-Ring 20,35x1,78 MM .	30,00					
891	1	1 619 P09 013	Auxiliary Handle .	147,00					
891/1	1	1 602 025 09Z	Auxiliary Handle .	639,00					
892	1	1 607 950 061	Pin-Type Face-Wrench .	65,00					
893	1	2 605 703 014	Clamping Flange	104,00					
894	1	1 603 345 043	Round Nut M14 .	110,00					
896	1	1 600 A01 6PP	Fast Locking Flange .	1.692,00					
897	1	1 605 430 003	Grease Tube 225 ML .	1.585,00					
898	1	1 615 430 020	Grease Tube 225 ML .	1.467,00					

Please observe: Repairing, modifying and testing of electro-tools are to be performed professionally.The safety regulations according to IEC, EN, VDE, AFNOR and other regulations of the individual countries are to be observed. Subject to change.
This price list supersedes all previous edition. Prices are subjected to change without any prior notice.

BOSCH Power Tools	Angle Grinder	Model GWS 26-180 H 3 601 H55 100 | BO

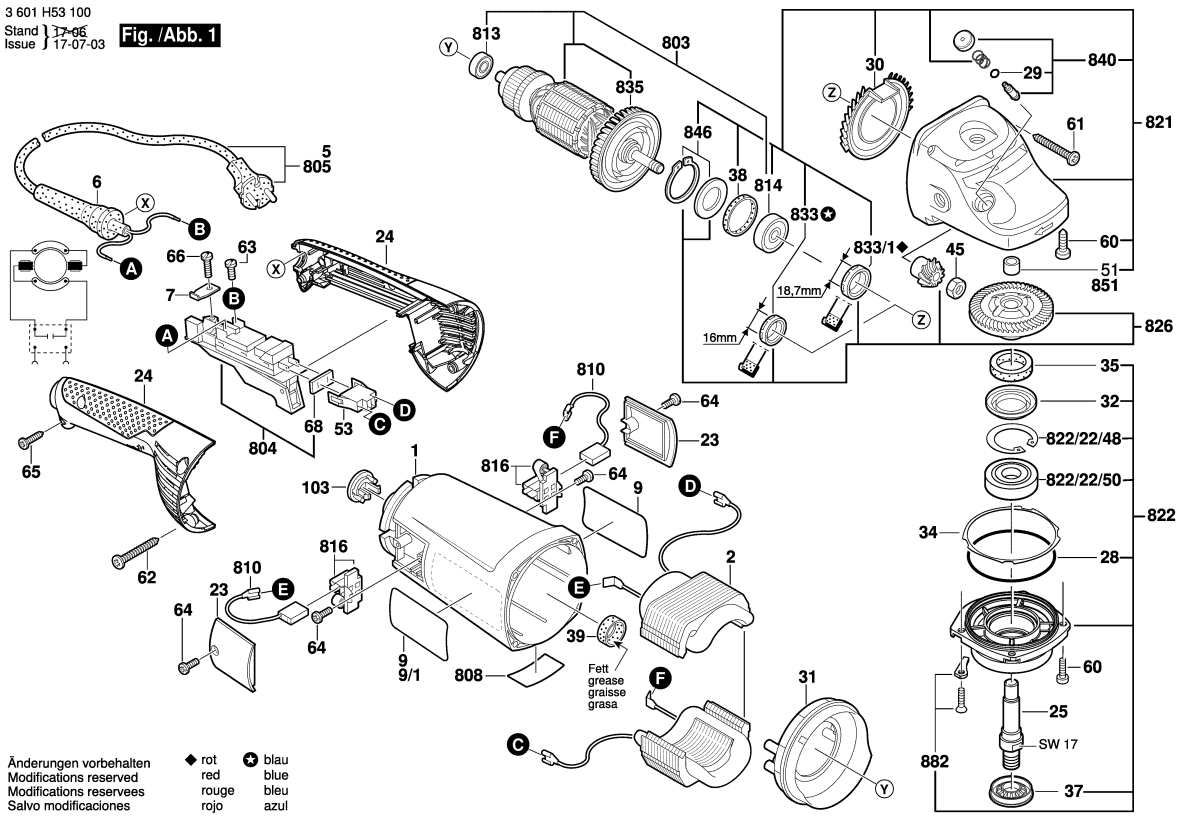

Model: 3 601 H55 100 = 230 | Date:

Item	Pc	Order no.	Description	LP IN INR
1	1	1 605 108 190	Motor Housing BLUE	629,00
2	1	1 604 220 51P	Field .	1.922,00
6	1	1 600 703 036	Grommet Ø10,5-Ø11,0x100	67,00
7	1	1 601 302 018	Fastening Clamp .	51,00
9	1	1 601 11C 27M	Manufacturer's nameplate .	
9/1	1	1 601 11C 27N	Manufacturer's nameplate .	
14	1	1 600 905 028	groove ball bearing .	228,00
23	2	1 618 B00 802	Sealing cap .	34,00
24	1	1 605 132 150	Handle BLUE	750,00
25	1	1 603 123 05U	Grinding Spindle .	401,00
28	1	1 600 210 033	O-Ring 79,0x1,78 MM .	51,00
29	1	1 600 210 045	O-Ring 8,0x1,0 MM .	50,00
30	1	1 600 591 029	Air Distributor .	69,00
31	1	1 600 591 075	Air-Deflector Ring .	103,00
32	1	1 600 290 019	Retaining snap ring .	47,00
34	1	1 600 190 020	Shim 0,15 MM THICK	51,00
34	1	1 600 190 021	Shim 0,3 MM THICK	51,00
34	1	1 600 190 022	Shim 0,1 MM THICK	53,00
34	1	1 600 190 037	Shim 0,2 MM THICK	31,00
34	1	1 600 190 038	Shim 0,25 MM THICK	31,00
34	1	1 600 190 039	Shim 0,35 MM THICK	31,00
34	1	1 600 190 040	Shim 0,4 MM THICK	31,00
35	1	1 600 205 034	Felt Washer .	51,00
37	1	1 600 290 036	Seal Ring BLACK	74,00

Item	Pc	Order no.	Description	LP IN INR
38	1	1 600 206 020	Rubber Ring 7 MM WIDE	50,00
39	1	1 600 206 030	Rubber Ring .	46,00
45	1	1 603 300 019	Hex Nut M10, SW14 .	50,00
51	1	1 600 200 031	Plain bearing Ø14 MM .	56,00
53	1	1 605 190 068	Socket Housing .	50,00
60	3	1 603 435 023	Thread-forming tap. Screw	47,00
61	4	2 912 401 038	Tapping Screw DIN	31,00
62	2	1 603 415 006	Oval-Head Screw .	44,00
63	2	1 603 410 014	Pan head screw M4x10 MM	50,00
64	4	1 603 435 042	Plastic-Cutting Screw	50,00
65	2	2 912 401 020	Tapping Screw DIN	31,00
66	1	2 910 211 019	Tapping Screw DIN	31,00
68	1	1 601 006 011	Sealing Plate .	50,00
103	1	1 602 388 035	Cable routing .	42,00
651	1	1 600 A00 XL9	Protective Cover Ø180 MM	312,00
660	1	1 602 025 051	Auxiliary Handle M14	1.138,00
803	1	1 604 010 BC1	Armature .	3.126,00
804	1	1 607 000 967	Switch BLACK	955,00
805	1	1 607 000 228	Power supply cord EU	1.577,00
808	1	1 601 11A 3H3	Nameplate .	
810	1	1 607 014 171	Carbon-Brush Set .	267,00
810	1	1 607 000 480	Carbon-Brush Set 10 x 1	
813	1	1 600 905 011	groove ball bearing 8x22x7	106,00
816	2	1 604 336 048	Brush Holder .	164,00

Please observe: Repairing, modifying and testing of electro-tools are to be performed professionally.The safety regulations according to IEC, EN, VDE, AFNOR and other regulations of the individual countries are to be observed. Subject to change.
This price list supersedes all previous edition. Prices are subjected to change without any prior notice.

3 601 H53 100
Stand } ~~01-09~~
Issue } 09-05-18

Fig. /Abb. 2

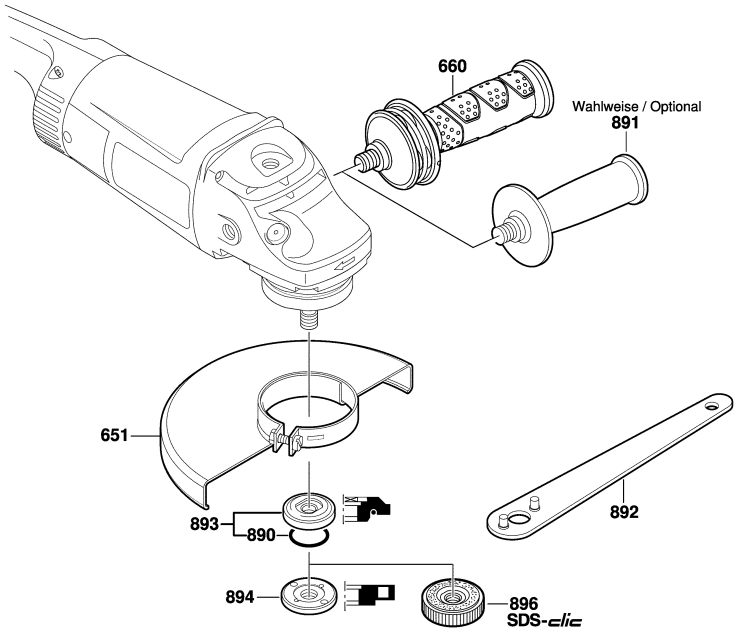

Änderungen vorbehalten
Modifications reserved
Modifications reservees
Salvo modificaciones

Model: 3 601 H55 100 = 230 | Date:

Item	Pc	Order no.	Description	LP IN INR
821	1	1 607 000 C03	Gear Housing .	1.882,00
822	1	1 607 000 C21	Bearing Flange Ø180 MM .	499,00
822/22/4	1	1 600 119 010	Spring retaining ring .	51,00
822/22/5	1	1 600 905 026	groove ball bearing	120,00
826	1	1 600 A00 3FR	Parts Set .	2.127,00
833	1	1 600 290 064	Rotary shaft lip seal 16 MM	86,00
833/1	1	1 600 290 013	Rotary shaft lip seal 18,7	74,00
835	1	1 600 A00 J93	Fan .	81,00
840	1	1 607 000 354	Push-Button .	228,00
846	1	1 607 000 C3E	Retaining Washer .	74,00
851	1	2 600 910 001	Needle-Roller Bearing Ø14	58,00
882	1	1 619 P06 597	Stopper .	192,00
890	1	1 600 210 039	O-Ring 20,35x1,78 MM .	30,00
891	1	1 602 025 0A1	Auxiliary Handle .	623,00
892	1	1 607 950 061	Pin-Type Face-Wrench .	65,00
893	1	2 605 703 014	Clamping Flange	104,00
894	1	1 603 345 043	Round Nut M14 .	110,00
896	1	1 600 A01 6PP	Fast Locking Flange .	1.692,00

Please observe: Repairing, modifying and testing of electro-tools are to be performed professionally.The safety regulations according to IEC, EN, VDE, AFNOR and other regulations of the individual countries are to be observed. Subject to change.
This price list supersedes all previous edition. Prices are subjected to change without any prior notice.

BOSCH Power Tools	Angle Grinder	Model GWS 30-180 B 3 601 HG0 0F0 | BO

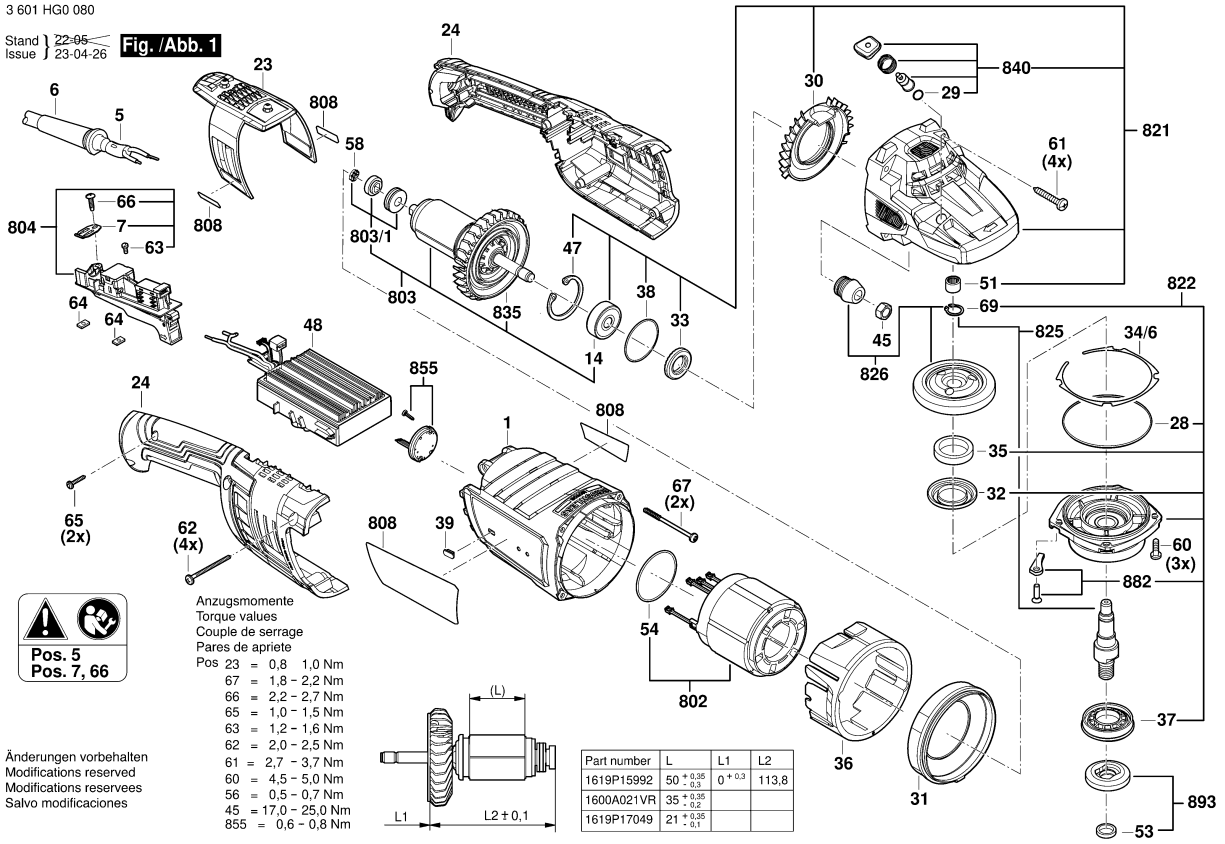

1 / 2

Model: 3 601 HG0 0F0 = 230 | Date:

Item	Pc	Order no.	Description	LP IN INR
1	1	1 619 P15 990	Motor Housing .	665,00
5	1	1 604 460 78G	Power supply cord .	
6	1	1 619 P14 369	Grommet .	53,00
7	1	1 601 302 018	Fastening Clamp .	51,00
14	1	1 600 905 028	groove ball bearing .	228,00
23	1	1 619 P16 044	Filter .	351,00
24	1	1 619 P16 021	Handle .	719,00
28	1	1 600 210 033	O-Ring 79,0x1,78 MM .	51,00
29	1	1 600 210 045	O-Ring 8,0x1,0 MM .	50,00
30	1	1 600 591 029	Air Distributor .	69,00
31	1	1 619 P16 023	Air-Deflector Ring .	109,00
32	1	1 600 290 019	Retaining snap ring .	47,00
33	1	1 600 290 013	Rotary shaft lip seal 18,7	74,00
34/6	1	1 600 190 020	Shim 0,15 MM THICK	51,00
34/6	1	1 600 190 021	Shim 0,3 MM THICK	51,00
34/6	1	1 600 190 022	Shim 0,1 MM THICK	53,00
34/6	1	1 600 190 037	Shim 0,2 MM THICK	31,00
34/6	1	1 600 190 038	Shim 0,25 MM THICK	31,00
34/6	1	1 600 190 039	Shim 0,35 MM THICK	31,00
34/6	1	1 600 190 040	Shim 0,4 MM THICK	31,00
35	1	1 600 205 034	Felt Washer .	51,00
36	1	1 619 P17 207	Insert .	149,00
37	1	1 619 P16 024	Seal Ring .	96,00
38	1	1 610 210 128	O-Ring 35,0x3,0 MM .	49,00

Item	Pc	Order no.	Description	LP IN INR
39	1	1 619 P17 336	Plug .	66,00
45	1	1 603 300 019	Hex Nut M10, SW14 .	50,00
47	1	1 619 P16 535	Spring retaining ring .	79,00
48	1	1 619 P16 027	Electronics Module .	6.000,00
51	1	2 600 910 001	Needle-Roller Bearing Ø14	58,00
53	1	1 619 P16 507	O-Ring .	87,00
54	1	1 600 210 038	O-Ring 38,0x1,5 MM .	73,00
58	1	1 619 P16 506	Cover .	74,00
60	4	1 603 435 023	Thread-forming tap. Screw	47,00
61	4	2 912 401 038	Tapping Screw DIN	31,00
62	4	1 603 435 060	Tapping Screw 4,8x55 .	30,00
63	1	1 603 410 014	Pan head screw M4x10 MM	50,00
64	2	2 601 030 006	fixing plate .	43,00
65	2	2 912 401 020	Tapping Screw DIN	31,00
66	1	2 910 211 019	Tapping Screw DIN	31,00
67	2	1 619 P02 043	Screw .	37,00
69	1	2 916 650 905	Spring retaining ring .	29,00
651	1	1 619 P15 622	Protective Cover Ø180 MM	337,00
802	1	1 619 P17 476	Stator .	3.840,00
803	1	1 619 P17 480	Rotor .	5.400,00
803/1	1	1 619 P17 217	Bearing set .	886,00
803/2	1	1 619 P18 523	Wear and Tear Part Set .	772,00
804	1	1 619 P17 478	Switch .	957,00
808	1	1 619 P17 494	Nameplate .	

Please observe: Repairing, modifying and testing of electro-tools are to be performed professionally.The safety regulations according to IEC, EN, VDE, AFNOR and other regulations of the individual countries are to be observed. Subject to change.
This price list supersedes all previous edition. Prices are subjected to change without any prior notice.

3 601 HG0 080

Stand 23-04
Issue 23-09-06

Fig. /Abb. 2

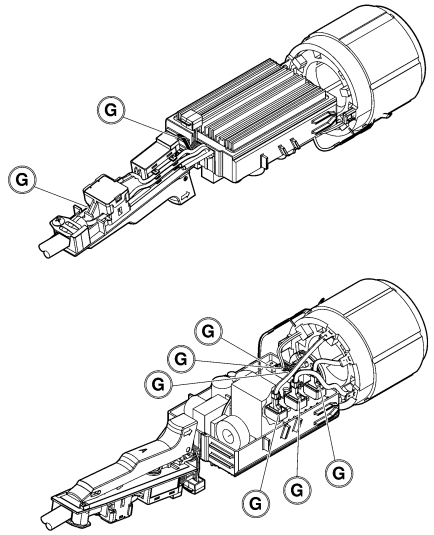

G = Apply glue on eight connectors!!
Klebstoff auf acht Stecker auftragen!!

Kafuter K-704 | Loctite FI 5145

Änderungen vorbehalten
Modifications reserved
Modifications reservees
Salvo modificaciones

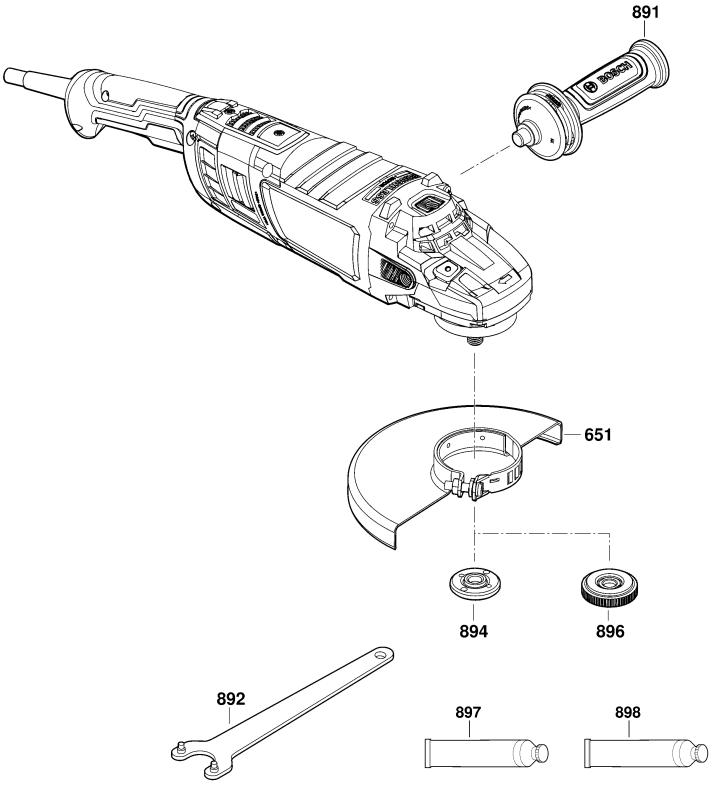

Model: 3 601 HG0 0F0 = 230 | Date:

Item	Pc	Order no.	Description	LP IN INR
821	1	1 619 P17 219	Gear Housing .	2.350,00
822	1	1 619 P15 751	Bearing Flange Ø180 MM .	632,00
825	1	1 619 P17 222	Grinding Spindle .	401,00
826	1	1 619 P17 223	Bevel Gear Set .	1.433,00
835	1	1 619 P16 030	Fan .	310,00
840	1	1 619 P17 224	Push-Button .	201,00
855	1	1 619 P17 225	Electronics Module .	425,00
882	1	1 619 P06 597	Stopper .	192,00
891	1	1 602 025 09Z	Auxiliary Handle .	639,00
892	1	1 619 P16 289	Pin-Type Face-Wrench .	240,00
893	1	1 619 P17 227	Clamping Flange .	214,00
894	1	1 619 P17 248	Round Nut .	202,00
896	1	1 600 A01 6PP	Fast Locking Flange .	1.692,00
897	1	1 605 430 003	Grease Tube 225 ML .	1.585,00
898	1	1 615 430 020	Grease Tube 225 ML .	1.467,00

Item	Pc	Order no.	Description	LP IN INR

Please observe: Repairing, modifying and testing of electro-tools are to be performed professionally.The safety regulations according to IEC, EN, VDE, AFNOR and other regulations of the individual countries are to be observed. Subject to change.
This price list supersedes all previous edition. Prices are subjected to change without any prior notice.

BOSCH Power Tools	Angle Grinder	Model GWS 30-230 B 3 601 HG1 0F0 | BO

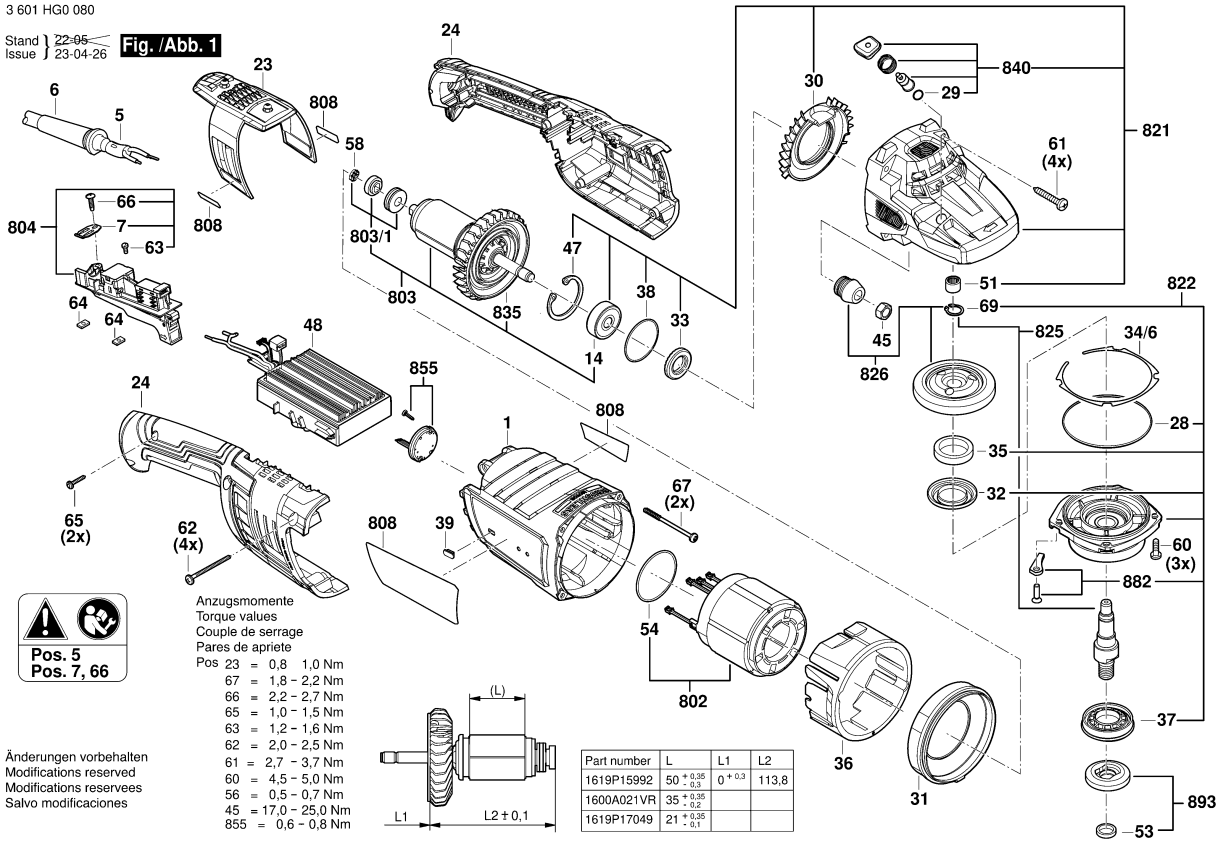

1 / 2

Model: 3 601 HG1 0F0 = 230 | Date:

Item	Pc	Order no.	Description	LP IN INR
1	1	1 619 P15 990	Motor Housing .	665,00
5	1	1 604 460 78G	Power supply cord .	
6	1	1 619 P14 369	Grommet .	53,00
7	1	1 601 302 018	Fastening Clamp .	51,00
14	1	1 600 905 028	groove ball bearing .	228,00
23	1	1 619 P16 044	Filter .	351,00
24	1	1 619 P16 021	Handle .	719,00
28	1	1 600 210 033	O-Ring 79,0x1,78 MM .	51,00
29	1	1 600 210 045	O-Ring 8,0x1,0 MM .	50,00
30	1	1 600 591 029	Air Distributor .	69,00
31	1	1 619 P16 023	Air-Deflector Ring .	109,00
32	1	1 600 290 019	Retaining snap ring .	47,00
33	1	1 600 290 013	Rotary shaft lip seal 18,7	74,00
34/6	1	1 600 190 020	Shim 0,15 MM THICK	51,00
34/6	1	1 600 190 021	Shim 0,3 MM THICK	51,00
34/6	1	1 600 190 022	Shim 0,1 MM THICK	53,00
34/6	1	1 600 190 037	Shim 0,2 MM THICK	31,00
34/6	1	1 600 190 038	Shim 0,25 MM THICK	31,00
34/6	1	1 600 190 039	Shim 0,35 MM THICK	31,00
34/6	1	1 600 190 040	Shim 0,4 MM THICK	31,00
35	1	1 600 205 034	Felt Washer .	51,00
36	1	1 619 P17 207	Insert .	149,00
37	1	1 619 P16 024	Seal Ring .	96,00
38	1	1 610 210 128	O-Ring 35,0x3,0 MM .	49,00

Item	Pc	Order no.	Description	LP IN INR
39	1	1 619 P17 336	Plug .	66,00
45	1	1 603 300 019	Hex Nut M10, SW14 .	50,00
47	1	1 619 P16 535	Spring retaining ring .	79,00
48	1	1 619 P16 027	Electronics Module .	6.000,00
51	1	2 600 910 001	Needle-Roller Bearing Ø14	58,00
53	1	1 619 P16 507	O-Ring .	87,00
54	1	1 600 210 038	O-Ring 38,0x1,5 MM .	73,00
58	1	1 619 P16 506	Cover .	74,00
60	4	1 603 435 023	Thread-forming tap. Screw	47,00
61	4	2 912 401 038	Tapping Screw DIN	31,00
62	4	1 603 435 060	Tapping Screw 4,8x55 .	30,00
63	1	1 603 410 014	Pan head screw M4x10 MM	50,00
64	2	2 601 030 006	fixing plate .	43,00
65	2	2 912 401 020	Tapping Screw DIN	31,00
66	1	2 910 211 019	Tapping Screw DIN	31,00
67	2	1 619 P02 043	Screw .	37,00
69	1	2 916 650 905	Spring retaining ring .	29,00
651	1	1 619 P15 668	Protective Cover Ø230 MM	373,00
802	1	1 619 P17 476	Stator .	3.840,00
803	1	1 619 P17 480	Rotor .	5.400,00
803/1	1	1 619 P17 217	Bearing set .	886,00
803/2	1	1 619 P18 523	Wear and Tear Part Set .	772,00
804	1	1 619 P17 478	Switch .	957,00
808	1	1 619 P17 499	Nameplate .	

Please observe: Repairing, modifying and testing of electro-tools are to be performed professionally.The safety regulations according to IEC, EN, VDE, AFNOR and other regulations of the individual countries are to be observed. Subject to change.
This price list supersedes all previous edition. Prices are subjected to change without any prior notice.

3 601 HG0 080

Stand ~~23-04~~
Issue 23-09-06

Fig. /Abb. 2

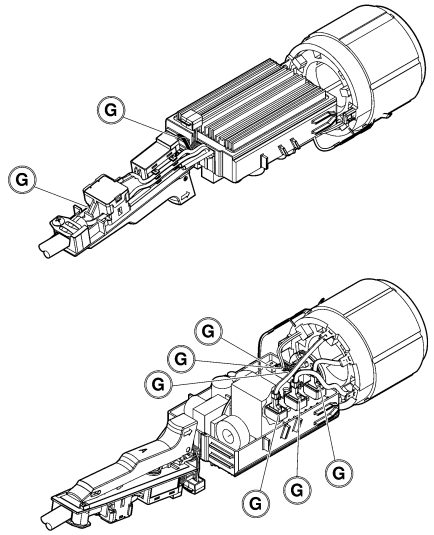

G = Apply glue on eight connectors!!
Klebstoff auf acht Stecker auftragen!!

Kafuter K-704 | Loctite FI 5145

Änderungen vorbehalten
Modifications reserved
Modifications reservees
Salvo modificaciones

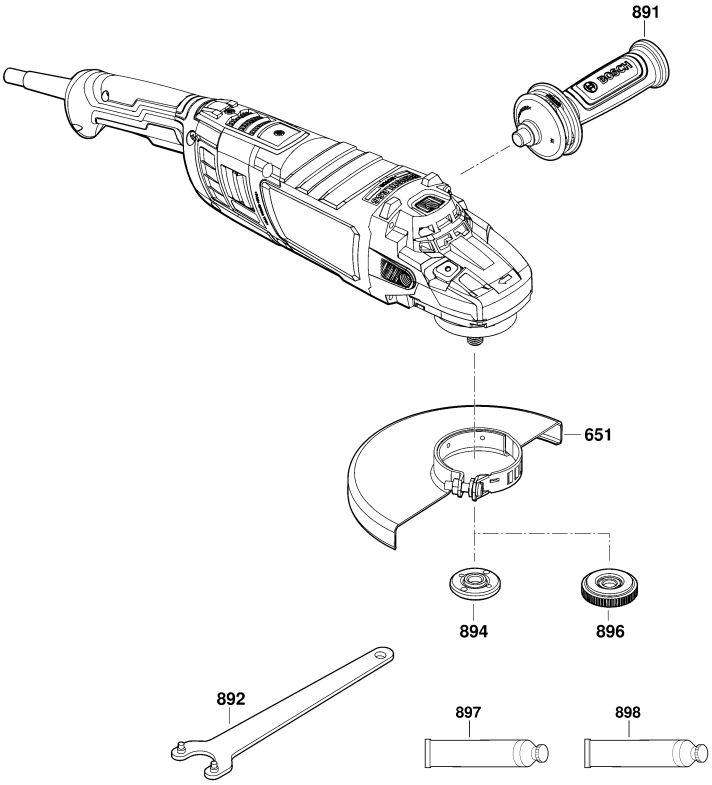

Model: 3 601 HG1 0F0 = 230 | Date:

Item	Pc	Order no.	Description	LP IN INR	Item	Pc	Order no.	Description	LP IN INR
821	1	1 619 P17 219	Gear Housing .	2.350,00					
822	1	1 619 P15 872	Bearing Flange Ø 230MM .	632,00					
825	1	1 619 P17 222	Grinding Spindle .	401,00					
826	1	1 619 P17 155	Bevel Gear Set .	1.587,00					
835	1	1 619 P16 030	Fan .	310,00					
840	1	1 619 P17 224	Push-Button .	201,00					
855	1	1 619 P17 225	Electronics Module .	425,00					
882	1	1 619 P06 597	Stopper .	192,00					
891	1	1 602 025 09Z	Auxiliary Handle .	639,00					
892	1	1 619 P16 289	Pin-Type Face-Wrench .	240,00					
893	1	1 619 P17 227	Clamping Flange .	214,00					
894	1	1 619 P17 248	Round Nut .	202,00					
896	1	1 600 A01 6PP	Fast Locking Flange .	1.692,00					
897	1	1 605 430 003	Grease Tube 225 ML .	1.585,00					
898	1	1 615 430 020	Grease Tube 225 ML .	1.467,00					

Please observe: Repairing, modifying and testing of electro-tools are to be performed professionally.The safety regulations according to IEC, EN, VDE, AFNOR and other regulations of the individual countries are to be observed. Subject to change.
This price list supersedes all previous edition. Prices are subjected to change without any prior notice.

BOSCH Power Tools	Cutoff saw	Model GCO 220 3 601 M37 3F0 | BO

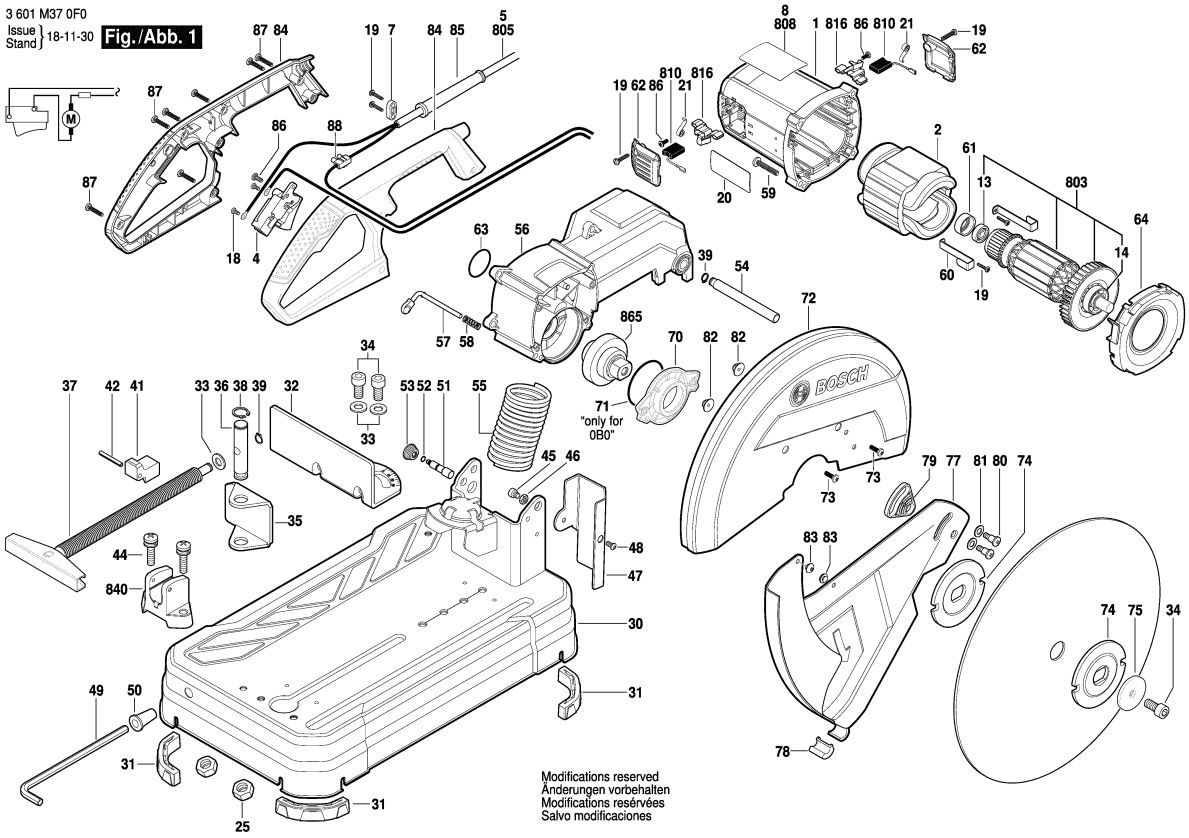

Model: 3 601 M37 3F0 = 230 | Date:

Item	Pc	Order no.	Description	LP IN INR
1	1	1 609 B03 601	Motor Housing .	464,00
2	1	1 609 B00 135	Field 220-240V .	1.473,00
4	1	1 609 B03 606	Switch .	475,00
5	1	1 609 B06 780	Power supply cord .	
7	1	1 609 B02 153	Cable Clip .	38,00
8	1	1 609 BN0 248	Nameplate .	
13	1	1 619 P03 850	Bearing 608-2RS .	94,00
14	1	1 609 B00 057	Bearing .	287,00
18	2	1 609 B03 644	Screw .	43,00
19	6	1 609 B02 357	Screw ECO-SYN St 3,5x16	38,00
20	1	1 609 B03 645	Warning Label .	
21	2	1 604 652 019	Spiral Spring .	53,00
25	2	1 619 P03 831	Hex Nut DIN 934-M8-8 .	29,00
30	1	1 609 B01 890	Base .	1.815,00
31	4	1 609 B03 594	Supporting foot .	42,00
32	1	1 609 B02 474	Stop Bracket .	390,00
33	4	1 609 BP7 045	Plain Washer .	30,00
34	3	1 609 B03 630	Screw .	43,00
35	1	1 609 B03 609	Clamp Bracket .	163,00
36	1	1 609 B03 597	Connecting Rod .	143,00
37	1	1 609 B03 598	Clamp Screw .	420,00
38	1	1 609 B03 616	Clip .	39,00
39	2	1 609 B03 628	Clip .	39,00
41	1	1 609 B03 576	Clamping Block .	344,00

Item	Pc	Order no.	Description	LP IN INR
42	1	1 619 P03 762	Spring Pin ISO 13337-4x35	30,00
44	2	1 609 B03 629	Screw and washer	43,00
45	1	1 609 B03 686	Screw .	43,00
46	1	1 609 B01 654	Nut .	34,00
47	1	1 609 B01 884	Protective Guard .	73,00
48	1	1 609 B06 426	Thread-Forming Screw .	38,00
49	1	1 609 B03 622	Hexagon Socket Wrench .	112,00
50	1	1 609 B03 617	Key Holder .	43,00
51	1	1 609 B03 623	Shaft .	51,00
52	1	1 619 P03 810	O-Ring 4,5x1,8 .	30,00
53	1	1 609 B03 624	Cap .	43,00
54	1	1 609 B03 618	Pivot Shaft .	89,00
55	1	1 609 B03 619	Contact strap .	383,00
56	1	1 609 B03 591	Arm .	2.138,00
57	1	1 609 B03 610	Locking Pin .	83,00
58	1	1 619 P03 864	Compression Spring .	37,00
59	4	1 619 P03 835	Thread-forming tap. Screw	30,00
60	2	1 619 P03 823	Pickup Clip .	62,00
61	1	1 600 206 030	Rubber Ring .	46,00
62	2	1 609 B03 627	Brush-Cover .	43,00
63	1	1 609 B00 068	O-Ring .	37,00
64	1	1 609 B03 604	Air-Deflector Ring .	97,00
70	1	1 609 B03 612	Gear Cover .	198,00
72	1	1 609 B06 429	Safety Guard .	1.233,00

Please observe: Repairing, modifying and testing of electro-tools are to be performed professionally.The safety regulations according to IEC, EN, VDE, AFNOR and other regulations of the individual countries are to be observed. Subject to change.
This price list supersedes all previous edition. Prices are subjected to change without any prior notice.

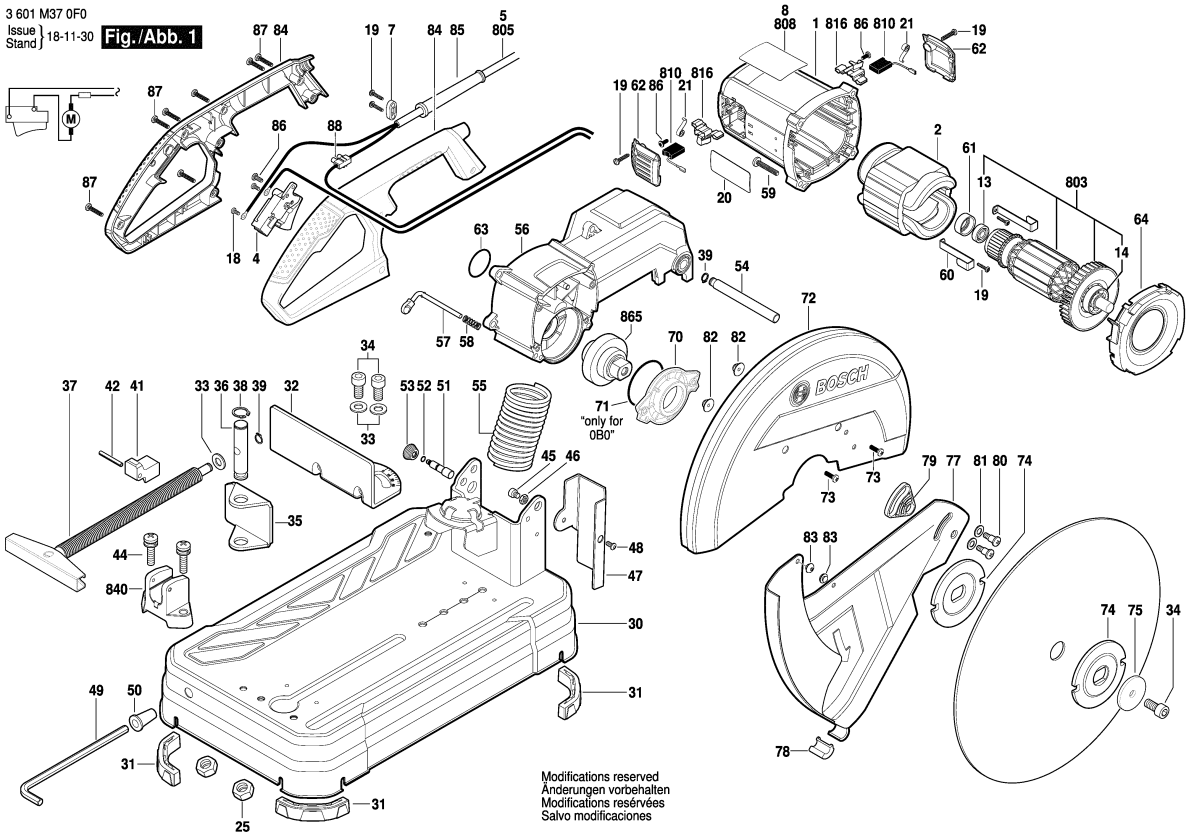

2 / 2

Model: 3 601 M37 3F0 = 230 | Date:

Item	Pc	Order no.	Description	LP IN INR	Item	Pc	Order no.	Description	LP IN INR
73	4	1 609 B01 483	Screw .	39,00					
74	2	1 609 B03 592	Flange .	246,00					
75	1	1 609 B03 625	Plain Washer .	62,00					
77	1	1 609 B02 497	Flap Guard .	555,00					
78	1	1 609 B03 631	Cover .	43,00					
79	1	1 609 B02 395	Supporting Plate .	38,00					
80	2	1 609 B03 641	Shoulder Screw .	43,00					
81	2	1 609 B03 513	Washer .	35,00					
82	2	1 609 B06 545	Nut .	29,00					
83	2	1 619 P03 871	Rubber Gasket .	30,00					
84	1	1 609 B01 785	Handle .	587,00					
85	1	1 609 B03 615	Grommet .	42,00					
86	5	1 609 B02 356	Screw .	38,00					
87	7	1 609 B02 355	Screw .	38,00					
88	1	1 609 B06 427	Connection Block .	30,00					
803	1	1 609 B03 639	Armature assembly	2.415,00					
810	1	1 607 014 171	Carbon-Brush Set .	267,00					
816	2	1 604 336 053	Brush Holder .	233,00					
840	1	1 609 B03 626	Clamping Holder .	485,00					
865	1	1 609 B03 640	Set Of Gears .	1.117,00					

Please observe: Repairing, modifying and testing of electro-tools are to be performed professionally.The safety regulations according to IEC, EN, VDE, AFNOR and other regulations of the individual countries are to be observed. Subject to change.
This price list supersedes all previous edition. Prices are subjected to change without any prior notice.

BOSCH Power Tools	Cutoff saw	Model GCO 14-24 3 601 M37 1F0 | BO

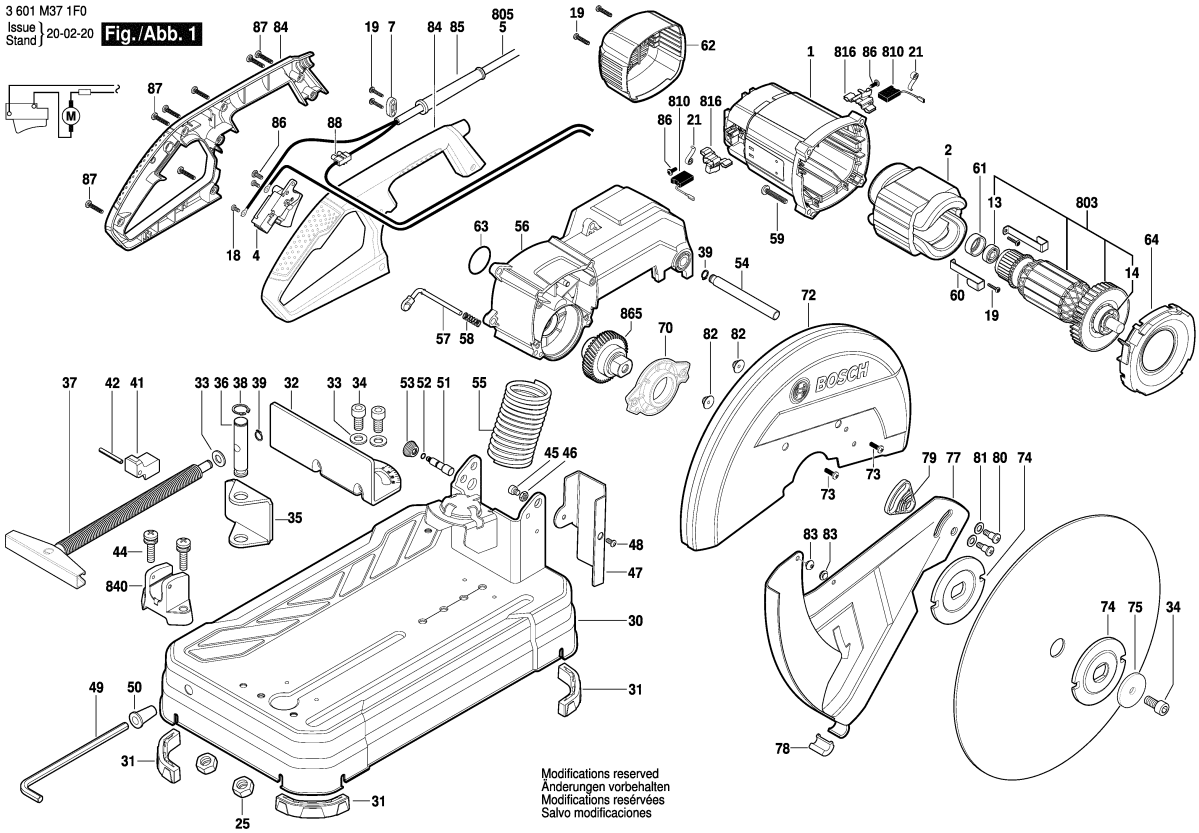

Model: 3 601 M37 1F0 = 230 | Date:

Item	Pc	Order no.	Description	LP IN INR
1	1	1 609 B03 600	Motor Housing .	636,00
2	1	1 609 B00 137	Field 230V .	2.136,00
4	1	1 609 B03 606	Switch .	475,00
5	1	1 609 B03 599	Power supply cord .	662,00
7	1	1 609 B02 153	Cable Clip .	38,00
13	1	1 619 P03 850	Bearing 608-2RS .	94,00
14	1	1 609 B00 057	Bearing .	287,00
18	2	1 609 B03 644	Screw .	43,00
19	6	1 609 B02 357	Screw ECO-SYN St 3,5x16	38,00
21	2	1 604 652 019	Spiral Spring .	53,00
25	2	1 619 P03 831	Hex Nut DIN 934-M8-8 .	29,00
30	1	1 609 B02 358	Base .	3.218,00
31	4	1 609 B03 594	Supporting foot .	42,00
32	1	1 609 B03 593	Stop Bracket .	566,00
33	4	1 609 BP7 045	Plain Washer .	30,00
34	3	1 609 B03 630	Screw .	43,00
35	1	1 609 B03 609	Clamp Bracket .	163,00
36	1	1 609 B03 597	Connecting Rod .	143,00
37	1	1 609 B03 598	Clamp Screw .	420,00
38	1	1 609 B03 616	Clip .	39,00
39	2	1 609 B03 628	Clip .	39,00
41	1	1 609 B03 576	Clamping Block .	344,00
42	1	1 619 P03 762	Spring Pin ISO 13337-4x35	30,00
44	2	1 609 B03 629	Screw and washer	43,00

Item	Pc	Order no.	Description	LP IN INR
45	1	1 609 B03 686	Screw .	43,00
46	1	1 609 B01 654	Nut .	34,00
47	1	1 609 B03 634	Protective Guard .	117,00
48	1	1 609 B06 426	Thread-Forming Screw .	38,00
49	1	1 609 B03 622	Hexagon Socket Wrench .	112,00
50	1	1 609 B03 617	Key Holder .	43,00
51	1	1 609 B03 623	Shaft .	51,00
52	1	1 619 P03 810	O-Ring 4,5x1,8 .	30,00
53	1	1 609 B03 624	Cap .	43,00
54	1	1 609 B03 618	Pivot Shaft .	89,00
55	1	1 609 B03 619	Contact strap .	383,00
56	1	1 609 B03 591	Arm .	2.138,00
57	1	1 609 B03 610	Locking Pin .	83,00
58	1	1 619 P03 864	Compression Spring .	37,00
59	4	1 619 P03 835	Thread-forming tap. Screw	30,00
60	2	1 609 B00 055	Pickup Clip .	30,00
61	1	1 600 206 030	Rubber Ring .	46,00
62	1	1 609 B03 602	End cap .	158,00
63	1	1 609 B00 068	O-Ring .	37,00
64	1	1 609 B03 604	Air-Deflector Ring .	97,00
70	1	1 609 B03 612	Gear Cover .	198,00
72	1	1 609 B06 429	Safety Guard .	1.233,00
73	4	1 609 B01 483	Screw .	39,00
74	2	1 609 B03 592	Flange .	246,00

Please observe: Repairing, modifying and testing of electro-tools are to be performed professionally.The safety regulations according to IEC, EN, VDE, AFNOR and other regulations of the individual countries are to be observed. Subject to change.
This price list supersedes all previous edition. Prices are subjected to change without any prior notice.

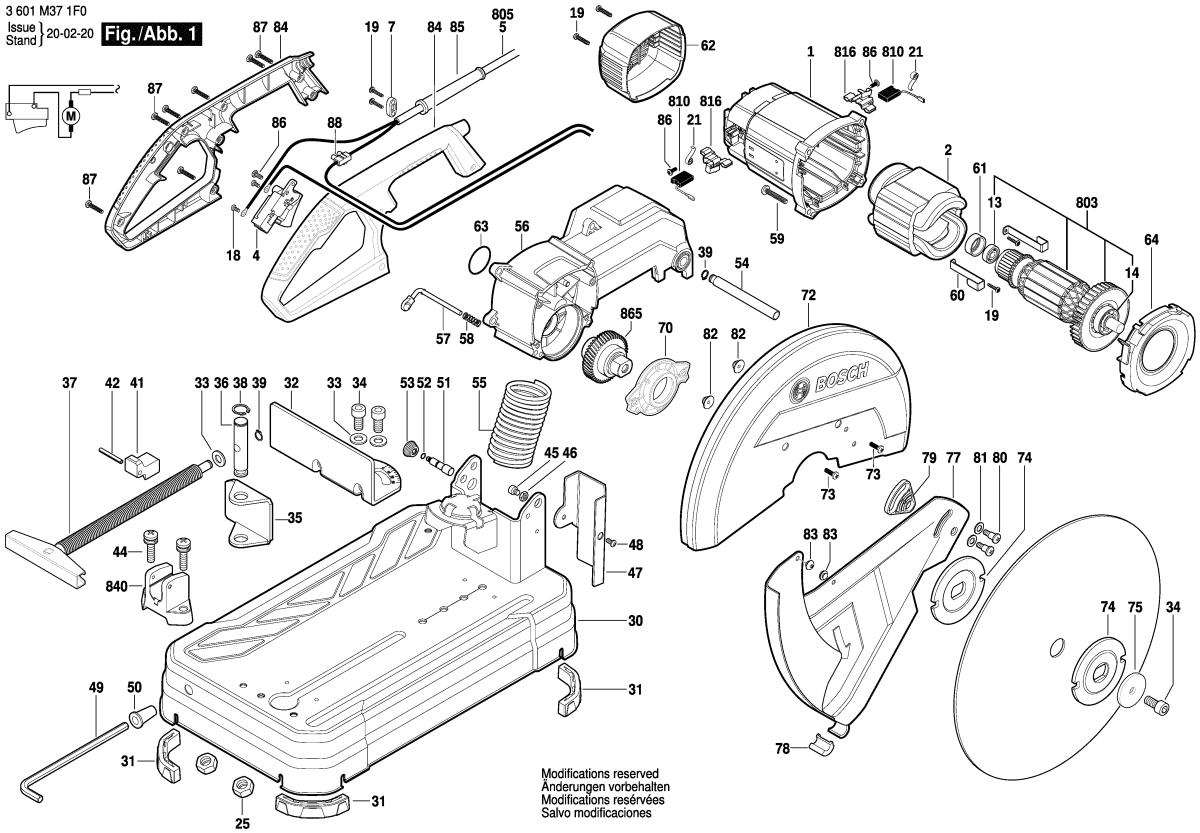

Model: 3 601 M37 1F0 = 230 | Date:

Item	Pc	Order no.	Description	LP IN INR	Item	Pc	Order no.	Description	LP IN INR
75	1	1 609 B03 625	Plain Washer .	62,00					
77	1	1 609 B03 608	Flap Guard .	645,00					
78	1	1 609 B03 631	Cover .	43,00					
79	1	1 609 B03 642	Supporting Plate .	43,00					
80	2	1 609 B03 641	Shoulder Screw .	43,00					
81	2	1 609 B03 513	Washer .	35,00					
82	2	1 609 B06 545	Nut .	29,00					
83	2	1 619 P03 871	Rubber Gasket .	30,00					
84	1	1 609 B01 785	Handle .	587,00					
85	1	1 609 B02 152	Grommet .	69,00					
86	5	1 609 B02 356	Screw .	38,00					
87	7	1 609 B02 355	Screw .	38,00					
88	1	1 609 B06 427	Connection Block .	30,00					
803	1	1 609 B03 638	Armature assembly 240V .	3.313,00					
810	1	1 607 014 171	Carbon-Brush Set .	267,00					
816	2	1 604 336 053	Brush Holder .	233,00					
840	1	1 609 B03 626	Clamping Holder .	485,00					
865	1	1 609 B03 640	Set Of Gears .	1.117,00					

Please observe: Repairing, modifying and testing of electro-tools are to be performed professionally.The safety regulations according to IEC, EN, VDE, AFNOR and other regulations of the individual countries are to be observed. Subject to change.
This price list supersedes all previous edition. Prices are subjected to change without any prior notice.

BOSCH Power Tools	Chop Saw	Model GCO 230 3 601 M56 0F0 | BO

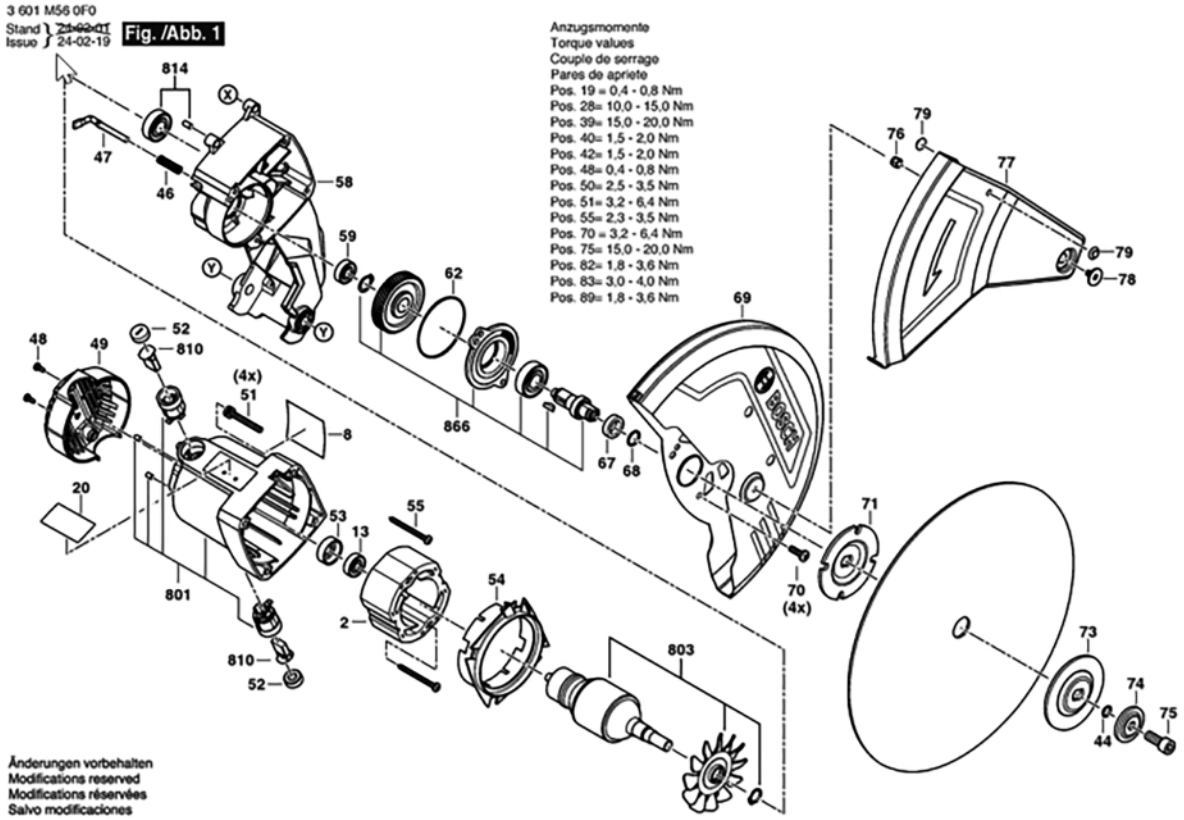

Model: 3 601 M56 0F0 = 230 | Date:

Item	Pc	Order no.	Description	LP in INR
2	1	1 619 PC1 802	Field .	1435,00
8	1	1 619 PC1 823	Nameplate	
8	1	1 619 PC1 825	Nameplate	
13	1	1 619 PC1 834	Ball Bearing.	70,00
20	1	1 619 PC1 841	Warning Label.	
44	1	1 619 PC1 866	O-Ring.	25,00
46	1	1 619 PC1 868	Spring .	25,00
47	1	1 619 PC1 869	Shaft .	40,00
48	1	1 619 PC1 870	Screw .	25,00
49	1	1 619 PC1 871	Housing Cover .	41,00
51	1	1 619 PC1 873	Screw .	40,00
52	1	1 619 PC1 874	Cap .	41,00
53	1	1 619 PC1 875	Rubber Bushing.	40,00
54	1	1 619 PC1 876	Wind deflector .	64,00
55	1	1 619 PC1 877	Screw .	25,00
58	1	1 619 PC1 880	Arm .	1578,00
59	1	1 619 PC1 881	ball bearing .	58,00
62	1	1 619 PC1 884	O-Ring .	25,00
67	1	1 619 PC1 889	Bushing .	40,00
68	1	1 619 PC1 890	O-Ring.	25,00
69	1	1 619 PC1 891	Upper guard.	727,00
70	1	1 619 PC1 892	Screw.	25,00
71	1	1 619 PC1 893	Clamping Flange .	136,00
73	1	1 619 PC1 895	Clamping Flange.	101,00

Item	Pc	Order no.	Description	LP in INR
74	1	1 619 PC1 896	Washer .	25,00
75	1	1 619 PC1 897	Screw .	25,00
76	1	1 619 PC1 898	Nut .	25,00
77	1	1 619 PC1 899	Lower guard .	365,00
78	1	1 619 PC1 900	Bolt .	25,00
79	1	1 619 PC1 901	Rubber Backing Pad .	25,00
801	1	1 619 PC1 928	Housing Assembly.	436,00
803	1	1 619 PC1 591	Armature assembly .	2205,00
810	1	1 619 PC1 589	Carbon-Brush Set .	249,00
814	1	1 619 PC1 929	Ball Bearing.	108,00
866	1	1 619 PC1 594	Drive shaft set.	1007,00

Please observe: Repairing, modifying and testing of electro-tools are to be performed professionally.The safety regulations according to IEC, EN, VDE, AFNOR and other regulations of the individual countries are to be observed. Subject to change.
This price list supersedes all previous edition. Prices are subjected to change without any prior notice.

BOSCH Power Tools	Chop Saw	Model GCO 230 3 601 M56 0F0 | BO

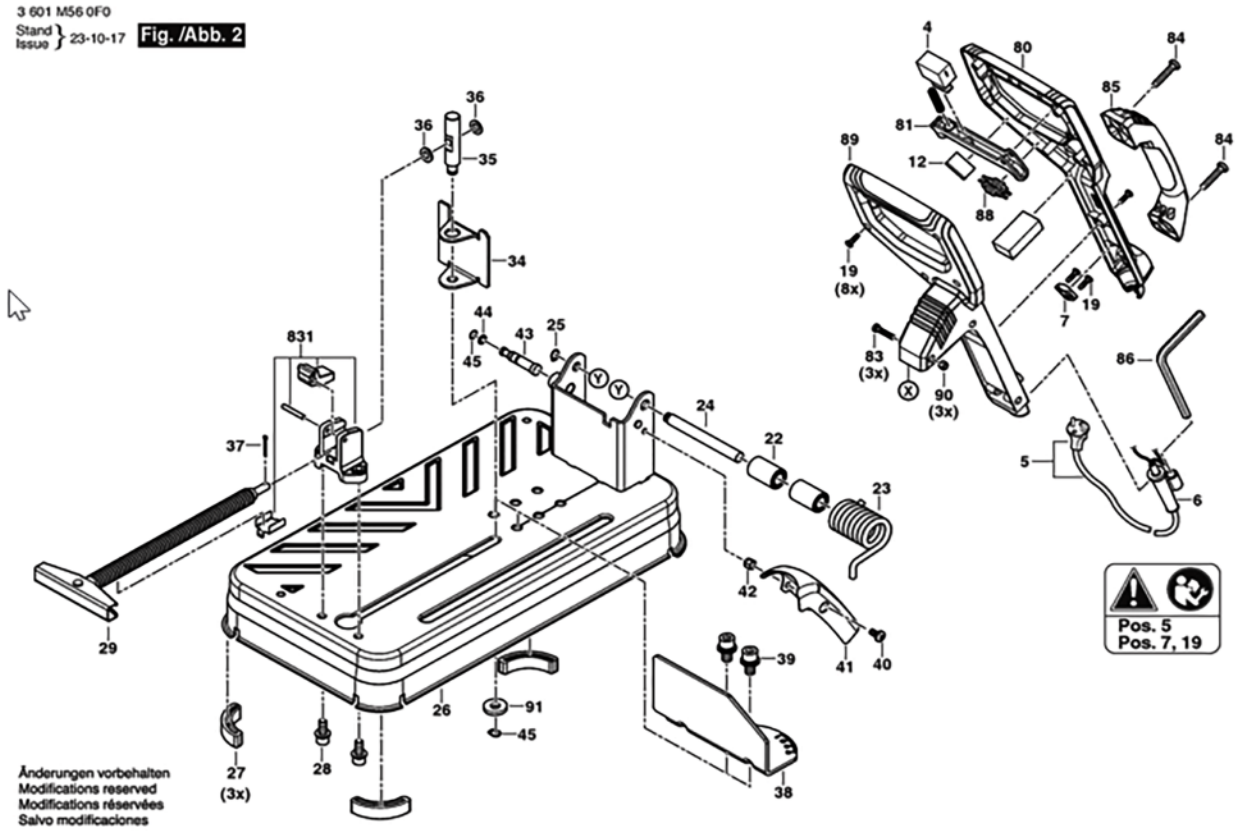

Model: 3 601 M56 0F0 = 230 | Date:

Item	Pc	Order no.	Description	LP in INR
4	1	1 619 PC1 806	Switch	259,00
5	1	1 619 PC1 812	Power supply cord .	
6	1	1 619 PC1 817	Grommet .	25,00
7	1	1 619 PB9 038	Cable Clip .	25,00
12	1	1 619 PB9 041	Capacitor .	35,00
19	1	1 619 PC1 840	Screw .	25,00
22	1	1 619 PC1 844	Bushing .	25,00
23	1	1 619 PC1 845	Spring .	122,00
24	1	1 619 PC1 846	Connection Pin .	105,00
25	1	1 619 PC1 847	Retaining ring .	25,00
26	1	1 619 PC1 848	Base .	1527,00
27	1	1 619 PC1 849	Rubber Cap .	25,00
28	1	1 619 PC1 850	Screw .	25,00
29	1	1 619 PC1 851	Clamp Screw .	225,00
34	1	1 619 PC1 856	Clamp Bracket .	113,00
35	1	1 619 PC1 857	Connecting Rod .	62,00
36	1	1 619 PC1 858	Washer .	25,00
37	1	1 619 PC1 859	Split Pin .	25,00
38	1	1 619 PC1 860	Stop Bracket .	276,00
39	1	1 619 PC1 861	Screw .	25,00
40	1	1 619 PC1 862	Screw .	25,00
41	1	1 619 PC1 863	Sheet Metal Guard .	63,00
42	1	1 619 PC1 864	Nut .	25,00
43	1	1 619 PC1 865	Shaft .	40,00

Item	Pc	Order no.	Description	LP in INR
45	1	1 619 PC1 867	Retaining ring .	25,00
80	1	1 619 PC1 902	Switch Handle .	205,00
81	1	1 619 PC1 903	Switch Button .	25,00
83	1	1 619 PC1 905	Screw .	25,00
84	1	1 619 PC1 906	Screw .	25,00
85	1	1 619 PC1 907	Carrying Handle .	62,00
86	1	1 619 PC1 908	Clamping wrench .	25,00
88	1	1 619 PB9 165	Induction Coil .	80,00
89	1	1 619 PC1 911	Switch Handle .	205,00
90	1	1 619 PC1 912	Nut .	25,00
91	1	1 619 PC1 931	Washer .	25,00
831	1	1 619 PC1 924	None .	189,00

Please observe: Repairing, modifying and testing of electro-tools are to be performed professionally.The safety regulations according to IEC, EN, VDE, AFNOR and other regulations of the individual countries are to be observed. Subject to change.
This price list supersedes all previous edition. Prices are subjected to change without any prior notice.

BOSCH Power Tools	Drill	Model GBM 6 3 601 D72 0F1 | BO

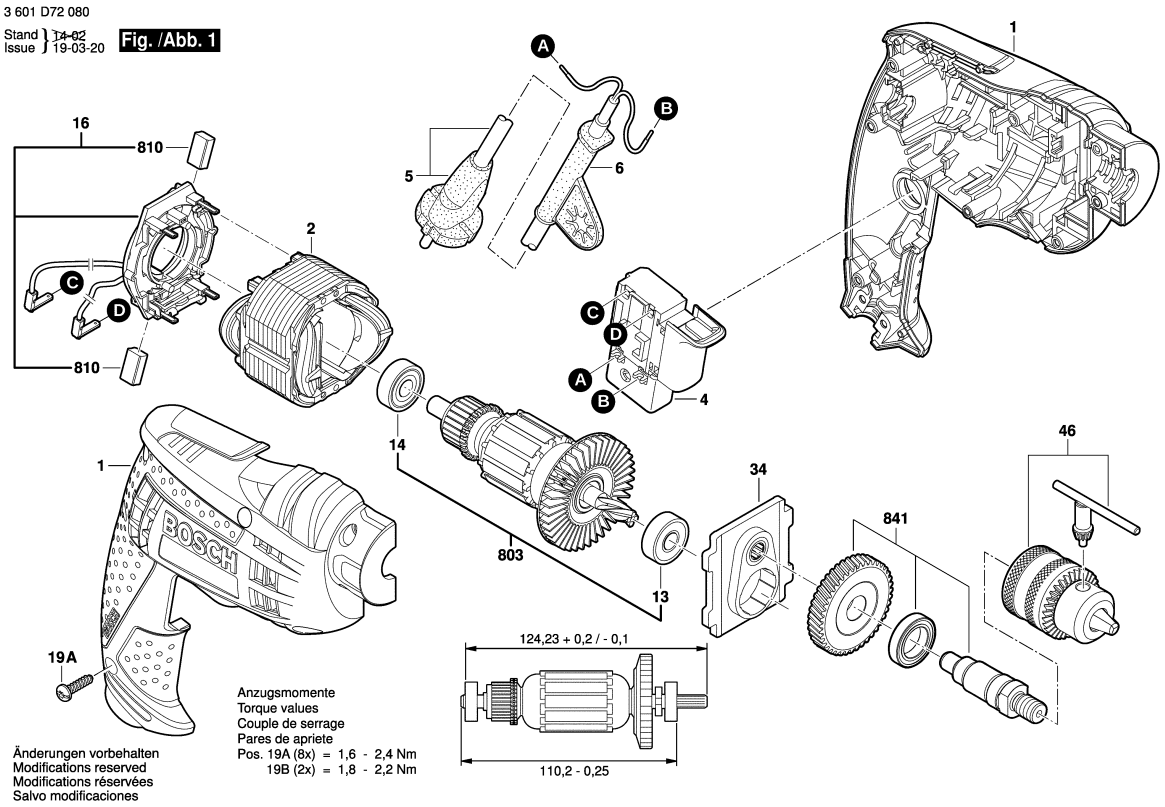

Model: 3 601 D72 0F1 = 230 | Date:

Item	Pc	Order no.	Description	LP IN INR
1	1	2 609 100 643	Motor Housing .	426,00
2	1	2 609 120 279	Field 230V .	817,00
4	1	1 607 200 508	On-Off Switch BLACK	189,00
5	1	1 604 460 72V	Power supply cord IND	112,00
6	1	2 600 707 062	Grommet Ø7x8,4 MM .	43,00
13	1	2 609 110 745	Ball Bearing .	96,00
14	1	2 609 110 491	Ball Bearing .	39,00
16	1	2 609 120 356	Brush Plate .	318,00
19	8	2 603 490 022	Screw 4x16 .	30,00
34	1	2 609 199 157	Bearing Bracket .	344,00
46	1	2 608 571 009	Chuck Ø1-6,5 MM, 3/8" .	685,00
803	1	2 609 120 337	Armature set 230-240V .	1.005,00
810	1	2 610 391 290	Carbon-Brush Set .	43,00
841	1	2 609 120 405	Spindle Assembly .	494,00

Item	Pc	Order no.	Description	LP IN INR

Please observe: Repairing, modifying and testing of electro-tools are to be performed professionally.The safety regulations according to IEC, EN, VDE, AFNOR and other regulations of the individual countries are to be observed. Subject to change.
This price list supersedes all previous edition. Prices are subjected to change without any prior notice.

BOSCH Power Tools	Drill	Model GBM 10 RE 3 601 D73 5F1 | BO

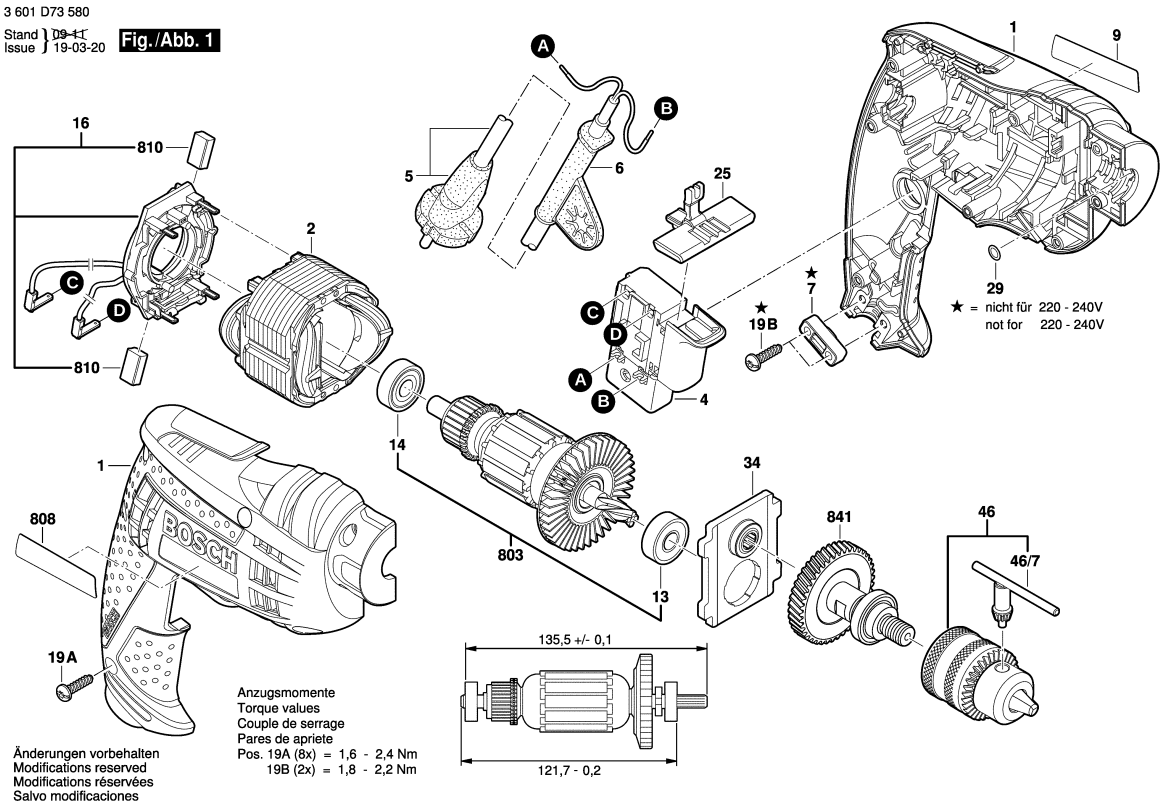

Model: 3 601 D73 5F1 = 230 | Date:

Item	Pc	Order no.	Description	LP IN INR
1	1	2 609 100 573	Motor Housing .	468,00
2	1	2 609 120 296	Field 220-240V .	519,00
4	1	2 607 200 623	Switch .	366,00
5	1	1 604 460 72V	Power supply cord IND	112,00
6	1	2 600 707 059	Grommet Ø6,9 MM .	67,00
7	1	2 601 035 001	Cable Clip .	44,00
13	1	2 609 110 153	Ball Bearing 8x22x7 .	43,00
14	1	2 609 110 491	Ball Bearing .	39,00
16	1	2 609 120 356	Brush Plate .	318,00
19	8	2 603 490 022	Screw 4x16 .	30,00
25	1	2 609 100 618	Reversing Switch .	134,00
29	2	1 900 210 000	O-Ring 5,0x1,5 MM .	44,00
34	1	2 609 199 158	Bearing Bracket .	213,00
46	1	1 608 571 079	Chuck Ø1,0-10 MM, 3/8" .	217,00
46/7	1	2 607 950 007	Chuck Wrench SG2 .	81,00
803	1	2 609 120 338	Armature set 220-240V .	778,00
810	1	2 610 391 290	Carbon-Brush Set .	43,00
841	1	2 609 120 406	Spindle Assembly .	629,00

Please observe: Repairing, modifying and testing of electro-tools are to be performed professionally.The safety regulations according to IEC, EN, VDE, AFNOR and other regulations of the individual countries are to be observed. Subject to change.
This price list supersedes all previous edition. Prices are subjected to change without any prior notice.

BOSCH Power Tools	Drill	Model GMB 13 RE 3 601 D77 5F1 | BO

3 601 D77 580
Stand } 12-08
Issue } 15-05-13

Fig./Abb. 1

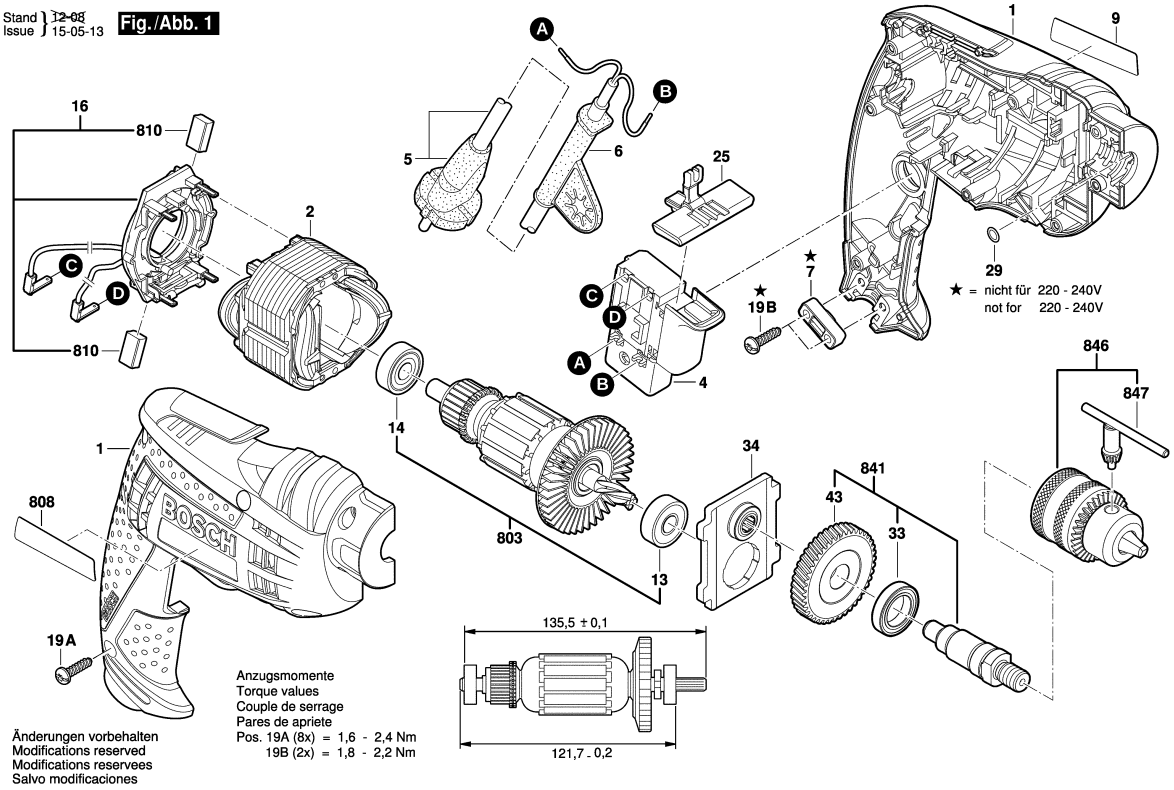

Model: 3 601 D77 5F1 = 230 | Date:

Item	Pc	Order no.	Description	LP IN INR
1	1	2 609 100 574	Motor Housing BLUE	632,00
2	1	2 604 220 718	Field 230V .	381,00
4	1	2 607 200 623	Switch .	366,00
5	1	1 604 460 72V	Power supply cord IND	112,00
6	1	2 600 707 059	Grommet Ø6,9 MM .	67,00
7	1	2 601 035 001	Cable Clip .	44,00
13	1	2 609 110 153	Ball Bearing 8x22x7 .	43,00
14	1	2 609 110 491	Ball Bearing .	39,00
16	1	2 609 120 356	Brush Plate .	318,00
19	10	2 603 490 022	Screw 4x16 .	30,00
25	1	2 609 100 618	Reversing Switch .	134,00
29	1	1 900 210 000	O-Ring 5,0x1,5 MM .	44,00
33	1	2 609 110 719	Ball Bearing .	250,00
34	1	2 609 199 158	Bearing Bracket .	213,00
43	1	2 609 110 709	Cylindrical Gear .	251,00
803	1	2 609 120 339	Armature set 220-240V .	1.200,00
810	1	2 610 391 290	Carbon-Brush Set .	43,00
841	1	2 609 120 407	Spindle Assembly .	591,00
846	1	2 608 571 076	Chuck .	239,00
847	1	2 607 950 007	Chuck Wrench SG2 .	81,00

Please observe: Repairing, modifying and testing of electro-tools are to be performed professionally.The safety regulations according to IEC, EN, VDE, AFNOR and other regulations of the individual countries are to be observed. Subject to change.
This price list supersedes all previous edition. Prices are subjected to change without any prior notice.

BOSCH Power Tools	Drill	Model GBM 350 3 601 AA9 5F2 | BO

3 601 AA9 5K0
Stand } ~~15-03~~
Issue } 19-08-22

Fig. /Abb. 1

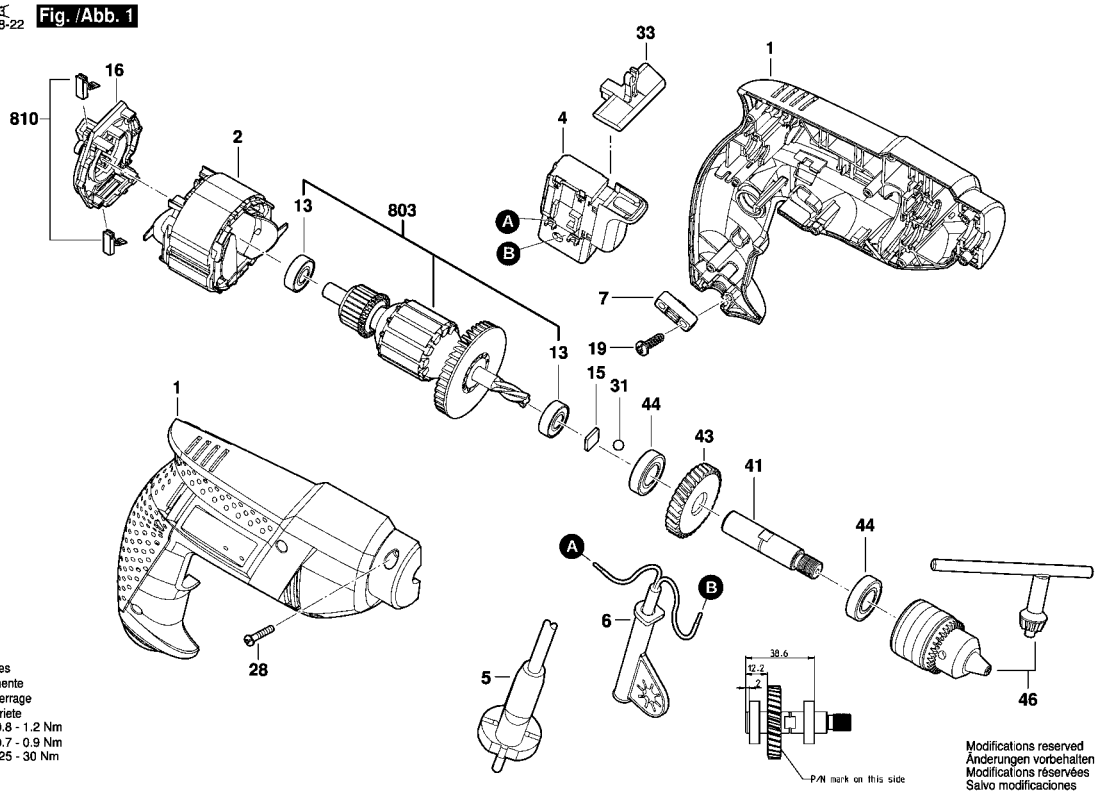

Model: 3 601 AA9 5F2 = 220 | Date:

Item	Pc	Order no.	Description	LP in INR	Item	Pc	Order no.	Description	LP in INR
1	1	1 619 P20 251	Housing Section .	416,00					
2	1	1 619 P20 093	Field .	457,00					
4	1	2 607 200 623	Switch .	366,00					
5	1	1 604 460 72V	Power supply cord IND	112,00					
6	1	2 600 707 059	Grommet Ø6,9 MM .	67,00					
7	1	2 601 035 001	Cable Clip .	44,00					
13	2	1 619 P06 024	Ball Bearing .	39,00					
15	1	2 609 110 019	Pressure Plate .	43,00					
16	1	1 619 P20 167	Brush Holder .	148,00					
19	2	2 603 490 022	Screw 4x16 .	30,00					
28	8	1 619 P00 219	Tapping Screw .	45,00					
31	1	1 903 230 009	Ball DIN 5401-5 G28 .	64,00					
33	1	1 619 P20 250	Adjusting Slide .	30,00					
41	1	1 619 P10 887	Drilling Spindle .	199,00					
43	1	1 619 P10 888	Cylindrical Gear .	219,00					
44	2	1 619 X07 256	Ball Bearing .	49,00					
46	1	1 608 571 079	Chuck Ø1,0-10 MM, 3/8" .	217,00					
803	1	1 619 P20 267	Armature set .	641,00					
810	1	1 619 P20 086	Carbon-Brush Set .	53,00					

Please observe: Repairing, modifying and testing of electro-tools are to be performed professionally.The safety regulations according to IEC, EN, VDE, AFNOR and other regulations of the individual countries are to be observed. Subject to change.
This price list supersedes all previous edition. Prices are subjected to change without any prior notice.

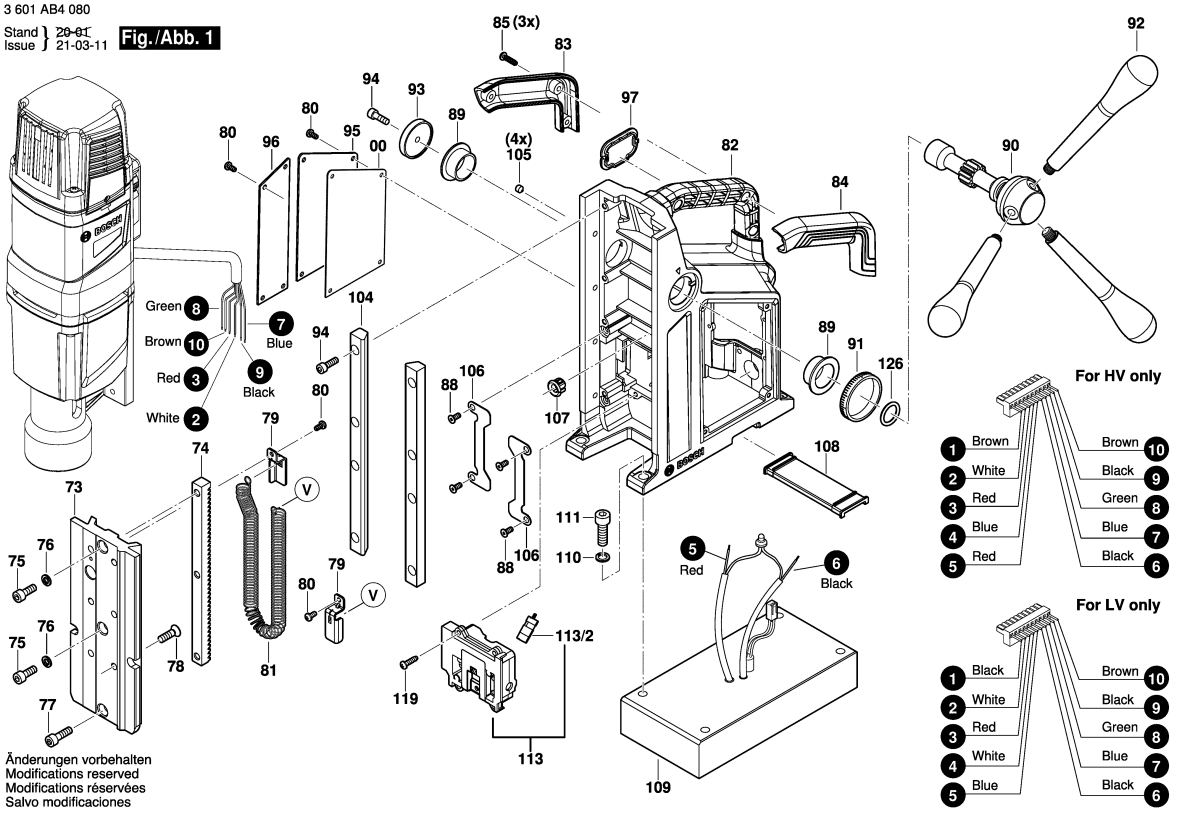

Model: 3 601 AB4 0F0 = 230 | Date:

Item	Pc	Order no.	Description	LP IN INR
1	1	1 619 PB3 681	Motor Housing .	2.079,00
2	1	1 619 PB4 201	Field assembly 220V .	4.158,00
3	1	1 619 PB3 666	Armature assembly 220V .	6.376,00
5	1	1 619 PB4 767	Power supply cord IN .	5.544,00
8	1	1 619 PB4 141	Nameplate .	
9	1	1 619 PB4 081	Manufacturer's nameplate	
16	2	1 619 PB3 680	Brush Holder .	343,00
22	1	1 619 PB3 702	Housing Cover .	693,00
23	1	1 619 PB3 703	Protective Cover .	77,00
24	1	1 619 PB3 701	Cap .	73,00
25	1	1 619 PB3 704	Cap .	70,00
27	4	1 619 PB3 705	Tapping Screw .	36,00
28	1	1 619 PB4 074	Printed Circuit Board .	3.553,00
29	1	1 619 PB4 083	Fastening Clamp .	53,00
30	1	1 619 PB3 700	Indicator Light .	70,00
31	2	1 619 PB3 699	Tapping Screw .	36,00
32	1	1 619 PB3 682	Stop Block .	70,00
33	1	1 619 PB3 684	Shaped Spring .	53,00
34	1	1 619 PB3 686	Potentiometer .	170,00
35	1	1 619 PB3 687	Clamping bracket .	36,00
36	1	1 619 PB3 688	Handwheel .	295,00
37	1	1 619 PB3 689	Connector .	224,00
38	1	1 619 PB3 691	Rear Plate .	217,00
39	13	1 619 PB3 678	Tapping Screw .	69,00

Item	Pc	Order no.	Description	LP IN INR
40	1	1 619 PB4 148	Connector Cable .	70,00
41	1	1 619 PB3 667	Rubber Ring .	69,00
42	1	1 619 PB3 671	Air-Deflector Ring .	53,00
43	2	1 619 PB3 672	Tapping Screw .	69,00
46	1	1 619 PB4 076	Flat Seal Ring .	81,00
47	1	1 619 PB3 662	Oil Separator .	112,00
48	1	1 619 PB3 658	Straight Pin .	69,00
50	4	1 619 PB3 642	Tapping Screw .	69,00
52	1	1 619 PB3 653	Retaining ring .	69,00
53	1	1 619 PB3 652	Toothed Gear .	1.386,00
54	1	1 619 PB3 651	Toothed Gear .	1.386,00
55	1	1 619 PB3 650	Toothed rack .	971,00
56	1	1 619 PB3 649	Parallel Key .	69,00
60	1	1 619 PB3 654	Retaining ring .	69,00
61	1	1 619 PB3 655	Toothed Gear .	1.386,00
65	1	1 619 PB3 640	Parallel Key .	92,00
66	1	1 619 PB3 639	Drilling Spindle .	1.664,00
69	1	1 619 PB3 643	O-Ring .	70,00
70	1	1 619 PB3 644	Shift-Lever Knob .	289,00
71	1	1 619 PB3 645	Spring .	69,00
72	1	1 619 PB3 646	Block .	70,00
73	1	1 619 PB3 709	Guide Block .	3.754,00
74	1	1 619 PB3 711	Toothed rack .	1.109,00
75	2	1 619 PB3 706	Screw .	69,00

Please observe: Repairing, modifying and testing of electro-tools are to be performed professionally.The safety regulations according to IEC, EN, VDE, AFNOR and other regulations of the individual countries are to be observed. Subject to change.
This price list supersedes all previous edition. Prices are subjected to change without any prior notice.

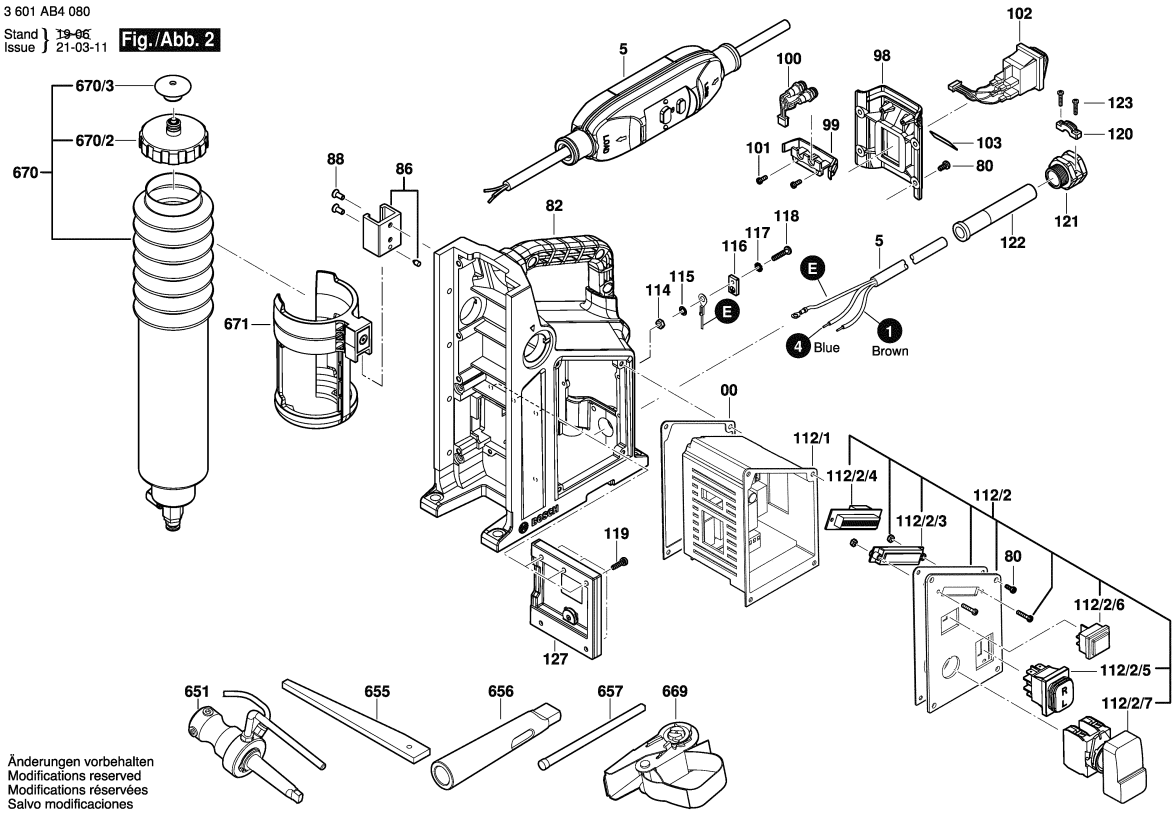

2 / 3

Model: 3 601 AB4 0F0 = 230 | Date:

Item	Pc	Order no.	Description	LP IN INR
76	2	1 619 PB3 707	Washer .	69,00
77	1	1 619 PB3 708	Screw .	69,00
78	6	1 619 PB3 710	Countersunk-Head Screw .	69,00
79	2	1 619 PB3 712	Holding Plate .	139,00
80	22	1 619 PB3 713	Screw .	69,00
81	1	1 619 PB3 714	Spring Sleeve .	69,00
82	1	1 619 PB3 745	Frame .	6.930,00
83	1	1 619 PB3 718	Carrying Handle .	147,00
84	1	1 619 PB3 719	Carrying Handle .	144,00
85	8	1 619 PB3 717	Tapping Screw .	69,00
86	1	1 619 PB3 761	Lifting Bracket .	110,00
88	6	1 619 PB3 726	Countersunk-Head Screw .	69,00
89	2	1 619 PB3 721	Flange Bushing .	53,00
90	1	1 619 PB3 746	Shaft Coupling .	2.079,00
91	1	1 619 PB4 088	Scale Ring .	70,00
92	3	1 619 PB3 747	Handle .	556,00
93	1	1 619 PB3 722	Cover Disc .	53,00
94	9	1 619 PB3 716	Screw .	69,00
95	1	1 619 PB7 206	Cover Plate .	265,00
96	1	1 619 PB3 723	Cover Plate .	142,00
97	1	1 619 PB4 334	Cover Plate .	53,00
98	1	1 619 PB3 756	Rear Panel .	259,00
99	1	1 619 PB3 757	Protective Cover .	139,00
100	1	1 619 PB3 758	Light Unit .	70,00

Item	Pc	Order no.	Description	LP IN INR
101	2	1 619 PB3 759	Screw .	69,00
102	1	1 619 PB3 755	On-Off Switch .	693,00
103	1	1 619 PB4 104	Warning Label .	
104	2	1 619 PB3 715	Guide Bar .	901,00
105	4	1 619 PB3 720	Headless Screw .	69,00
106	2	1 619 PB3 725	Stop Plate .	53,00
107	1	1 619 PB3 724	Protection Sleeve .	69,00
108	1	1 619 PB4 087	Protection Sleeve .	53,00
109	1	1 619 PB3 738	Magnetic Base .	11.759,00
110	4	1 619 PB3 739	Spring Washer .	69,00
111	4	1 619 PB3 740	Screw .	69,00
112/1	1	1 619 PB4 118	Control Unit .	12.402,00
112/2	1	1 619 PB4 119	Switch Unit .	9.075,00
112/2/3	1	1 619 PB4 116	Cover .	70,00
112/2/4	1	1 619 PB4 117	Indicator Lamp .	2.209,00
112/2/5	1	1 619 PB3 823	Reversing Switch .	693,00
112/2/6	1	1 619 PB3 824	On-Off Switch .	693,00
112/2/7	1	1 619 PB3 825	Motor Protection Switch .	1.109,00
113	1	1 619 PB4 086	Laser unit .	1.664,00
113/2	1	1 619 PB3 729	Laser .	1.345,00
114	1	1 619 PB4 102	Hex Nut .	69,00
115	1	1 619 PB4 103	Washer .	69,00
116	1	1 619 PB3 749	Tag .	69,00
117	1	1 619 PB3 750	Toothed lock washer .	69,00

Please observe: Repairing, modifying and testing of electro-tools are to be performed professionally.The safety regulations according to IEC, EN, VDE, AFNOR and other regulations of the individual countries are to be observed. Subject to change.
This price list supersedes all previous edition. Prices are subjected to change without any prior notice.

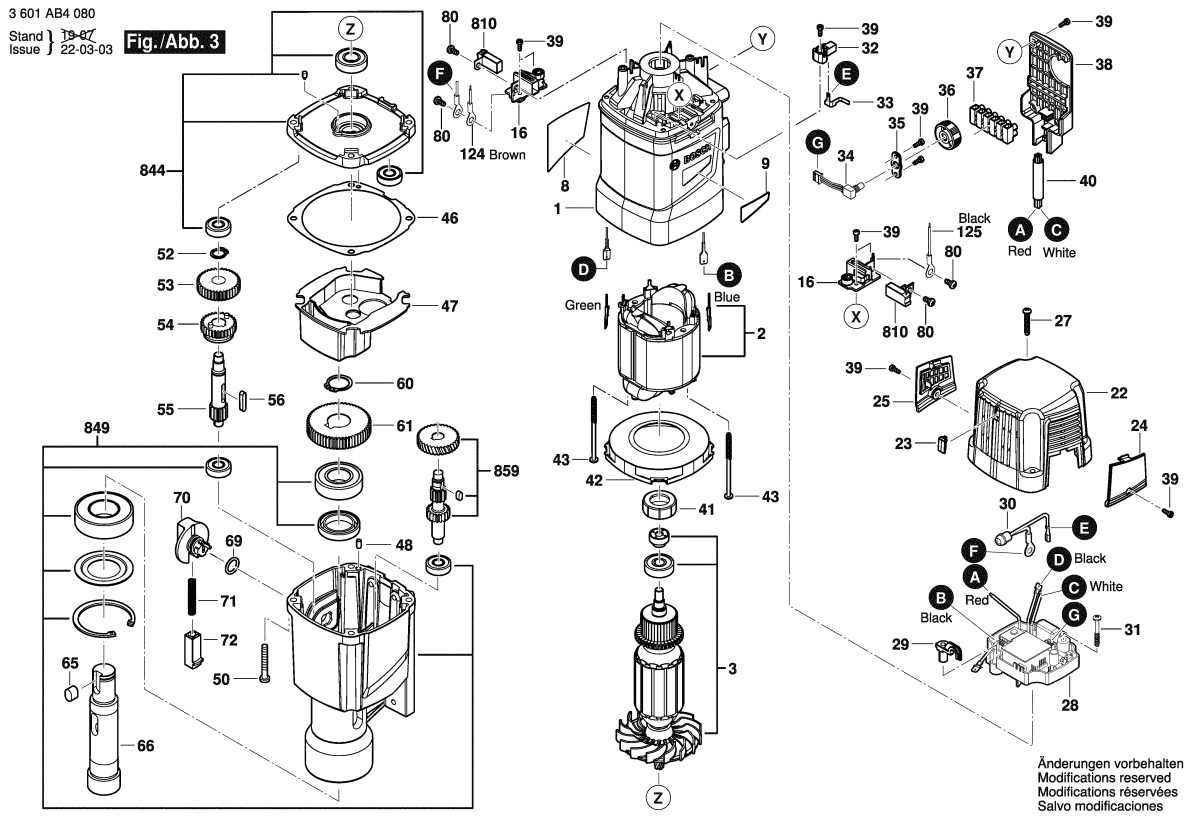

3 / 3

Model: 3 601 AB4 0F0 = 230 | Date:

Item	Pc	Order no.	Description	LP IN INR
118	1	1 619 PB3 751	Screw .	69,00
119	9	1 619 PB3 734	Screw .	69,00
120	1	1 619 PB4 099	Cable Clip .	69,00
121	1	1 619 PB4 100	Cable Holder .	69,00
122	1	1 619 PB4 101	Grommet .	69,00
123	2	1 619 PB4 098	Tapping Screw .	69,00
124	1	1 619 PB3 676	Round copper wire	69,00
125	1	1 619 PB4 647	Round copper wire BLACK	53,00
126	1	1 619 PB4 333	O-Ring .	139,00
127	1	1 619 PB7 205	Cover Plate .	
651	1	1 619 PB3 771	Milling machine arbor .	8.316,00
655	1	1 619 PB3 776	Drift .	336,00
656	1	1 619 PB3 777	Reduction Sleeve .	623,00
657	1	1 619 PB3 778	Positioning Pin .	248,00
669	1	1 619 PB3 779	Safety rope .	866,00
670	1	1 619 PB3 763	Coolant Tank .	1.743,00
670/2	1	1 619 PB3 767	Tank Cover .	139,00
670/3	1	1 619 PB3 768	End Plug .	70,00
671	1	1 619 PB4 127	Mounting Bracket .	754,00
810	1	1 619 PB4 295	Carbon-Brush Set .	556,00
844	1	1 619 PB4 392	Intermediate Flange .	1.386,00
849	1	1 619 PB4 393	Gear Housing .	5.466,00
859	1	1 619 PB4 394	Toothed rack .	2.079,00

Item	Pc	Order no.	Description	LP IN INR

Please observe: Repairing, modifying and testing of electro-tools are to be performed professionally.The safety regulations according to IEC, EN, VDE, AFNOR and other regulations of the individual countries are to be observed. Subject to change.
This price list supersedes all previous edition. Prices are subjected to change without any prior notice.

BOSCH Power Tools	Impact drill SB1	Model GSB10RE 3 601 B16 1F4 | BO

3 601 B16 1B0
Stand ~~13-07~~
Issue 14-02-27
Fig./Abb. 1

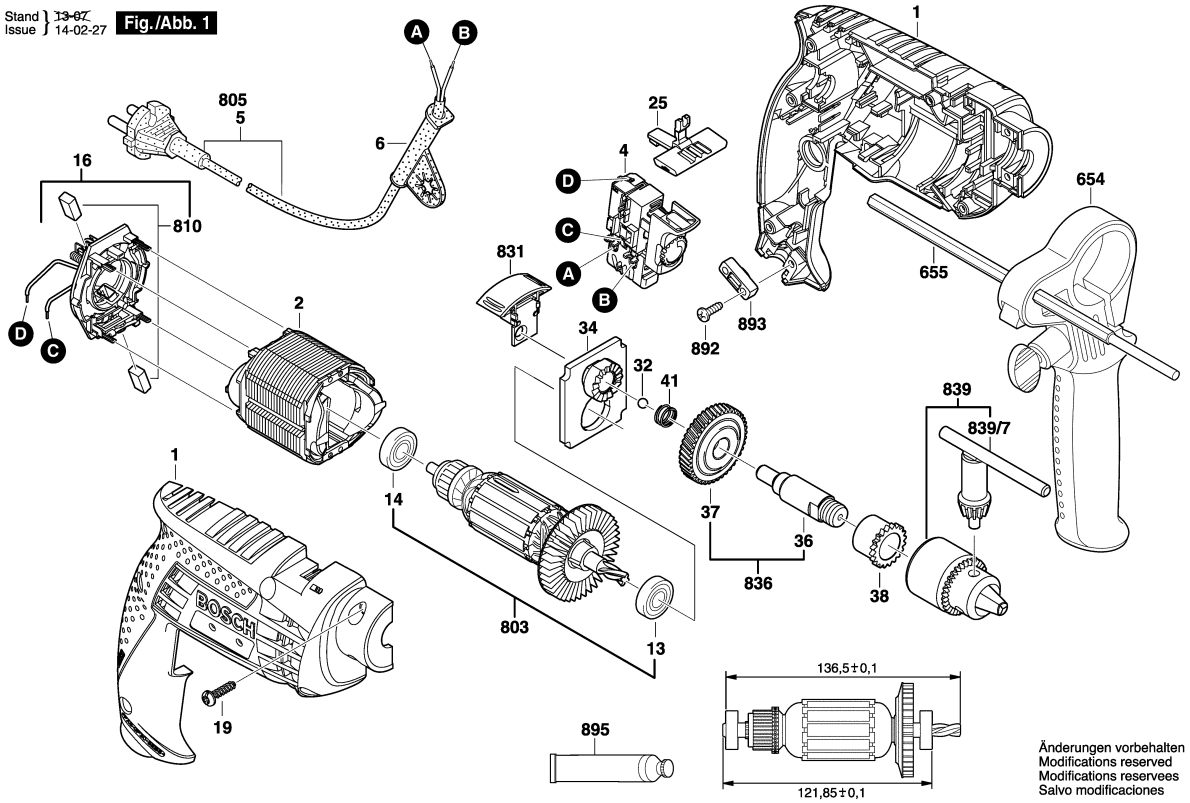

Model: 3 601 B16 1F4 = 230 | Date:

Item	Pc	Order no.	Description	LP IN INR
1	1	2 609 100 427	Motor Housing .	357,00
2	1	2 604 220 718	Field 230V .	381,00
4	1	2 607 200 623	Switch .	366,00
5	1	1 604 460 72V	Power supply cord IND	112,00
6	1	2 600 707 059	Grommet Ø6,9 MM .	67,00
13	1	2 609 110 153	Ball Bearing 8x22x7 .	43,00
14	1	2 609 110 491	Ball Bearing .	39,00
16	1	2 609 120 317	Brush Plate .	225,00
19	7	2 603 490 022	Screw 4x16 .	30,00
25	1	2 609 100 580	Lever .	45,00
32	1	1 903 230 010	Ball DIN 5401-5,5MM-III-ST	31,00
34	1	2 609 199 073	Bearing Bracket .	103,00
36	1	2 609 110 440	Spindle .	153,00
37	1	2 606 320 092	Conversion Gear .	128,00
38	1	2 609 110 442	Sintered-Metal Bushing .	45,00
41	1	2 604 616 006	Compression Spring .	50,00
655	1	2 603 001 009	Depth-Gauge .	215,00
803	1	2 609 120 232	Armature 220-240V .	571,00
810	1	2 610 391 290	Carbon-Brush Set .	43,00
831	1	2 609 160 127	Change-Over Switch .	71,00
836	1	2 609 160 122	Drilling Spindle .	291,00
839	1	1 608 571 079	Chuck Ø1,0-10 MM, 3/8" .	217,00
839/7	1	2 607 950 007	Chuck Wrench SG2 .	81,00
892	2	2 603 490 022	Screw 4x16 .	30,00
893	1	2 601 035 001	Cable Clip .	44,00
895	1	3 605 430 003	Grease Tube Albida .	1.473,00

Please observe: Repairing, modifying and testing of electro-tools are to be performed professionally.The safety regulations according to IEC, EN, VDE, AFNOR and other regulations of the individual countries are to be observed. Subject to change.
This price list supersedes all previous edition. Prices are subjected to change without any prior notice.

BOSCH Power Tools	Impact drill SB1	Model GSB 13RE 3 601 B17 1F3 | BO

3 601 B17 1K0
Stand ~~13-07~~
Issue 14-02-27

Fig./Abb. 1

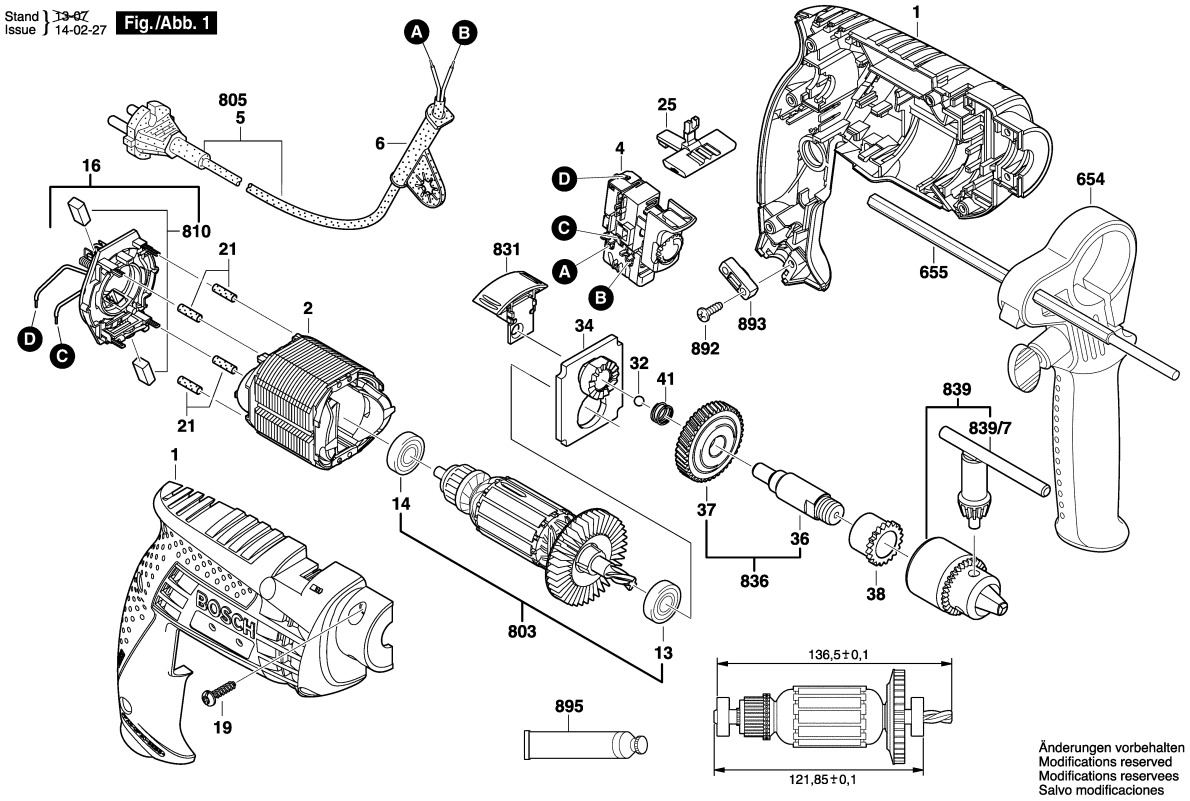

Model: 3 601 B17 1F3 = 230 / IND | Date:

Item	Pc	Order no.	Description	LP IN INR
1	1	2 605 105 105	Housing Section .	975,00
2	1	2 604 220 718	Field 230V .	381,00
4	1	2 607 200 623	Switch .	366,00
5	1	1 604 460 72V	Power supply cord IND	112,00
6	1	2 600 707 059	Grommet Ø6,9 MM .	67,00
13	1	2 609 110 153	Ball Bearing 8x22x7 .	43,00
14	1	2 609 110 491	Ball Bearing .	39,00
16	1	2 609 120 317	Brush Plate .	225,00
19	9	2 603 490 022	Screw 4x16 .	30,00
21	4	2 600 409 021	Shrinkable Tube .	30,00
25	1	2 609 100 580	Lever .	45,00
32	1	1 903 230 010	Ball DIN 5401-5,5MM-III-ST	31,00
34	1	2 609 199 073	Bearing Bracket .	103,00
36	1	2 609 110 441	Drilling Spindle .	285,00
37	1	2 606 320 092	Conversion Gear .	128,00
38	1	2 609 110 442	Sintered-Metal Bushing .	45,00
41	1	2 604 616 006	Compression Spring .	50,00
654	1	2 602 025 094	Auxiliary Handle .	158,00
655	1	2 603 001 009	Depth-Gauge .	215,00
803	1	2 609 120 232	Armature 220-240V .	571,00
810	1	2 610 391 290	Carbon-Brush Set .	43,00
831	1	2 609 160 127	Change-Over Switch .	71,00
836	1	2 609 160 123	Drilling Spindle .	662,00
839	1	2 608 571 076	Chuck .	239,00
839/7	1	2 607 950 007	Chuck Wrench SG2 .	81,00
892	2	2 603 490 022	Screw 4x16 .	30,00
893	1	2 601 035 001	Cable Clip .	44,00

Please observe: Repairing, modifying and testing of electro-tools are to be performed professionally.The safety regulations according to IEC, EN, VDE, AFNOR and other regulations of the individual countries are to be observed. Subject to change.
This price list supersedes all previous edition. Prices are subjected to change without any prior notice.

BOSCH Power Tools	Impact drill SB1	Model GSB 450 3 601 B16 1FA | BO

3 601 B16 1B0

Stand ~~13-07~~
Issue 14-02-27

Fig./Abb. 1

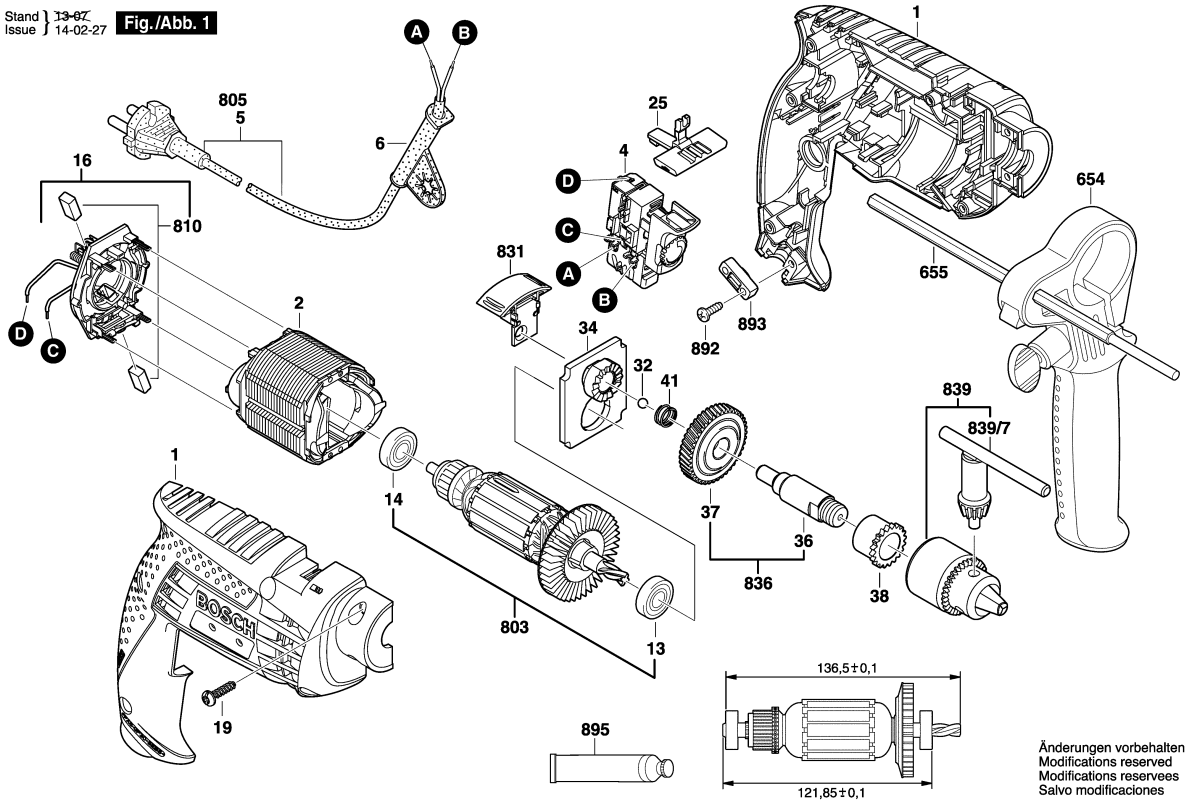

Model: 3 601 B16 1FA = 230 | Date:

Item	Pc	Order no.	Description	LP IN INR
1	1	2 609 100 427	Motor Housing .	357,00
2	1	2 604 220 718	Field 230V .	381,00
4	1	2 607 200 623	Switch .	366,00
5	1	1 604 460 72V	Power supply cord IND	112,00
6	1	2 600 707 059	Grommet Ø6,9 MM .	67,00
13	1	2 609 110 153	Ball Bearing 8x22x7 .	43,00
14	1	2 609 110 491	Ball Bearing .	39,00
16	1	2 609 120 375	Brush Plate .	243,00
19	7	2 603 490 022	Screw 4x16 .	30,00
25	1	2 609 100 580	Lever .	45,00
32	1	1 903 230 010	Ball DIN 5401-5,5MM-III-ST	31,00
34	1	2 609 199 073	Bearing Bracket .	103,00
36	1	2 609 110 440	Spindle .	153,00
37	1	2 606 320 092	Conversion Gear .	128,00
38	1	2 609 110 442	Sintered-Metal Bushing .	45,00
41	1	2 604 616 006	Compression Spring .	50,00
654	1	2 602 025 094	Auxiliary Handle .	158,00
655	1	2 609 005 615	Depth-Gauge .	92,00
655	1	2 603 001 009	Depth-Gauge .	215,00
803	1	2 609 120 232	Armature 220-240V .	571,00
808	1	2 609 134 631	Label .	
810	1	2 610 391 290	Carbon-Brush Set .	43,00
831	1	2 609 160 127	Change-Over Switch .	71,00
836	1	2 609 160 122	Drilling Spindle .	291,00

Item	Pc	Order no.	Description	LP IN INR
839	1	1 608 571 079	Chuck Ø1,0-10 MM, 3/8" .	217,00
839/7	1	2 607 950 007	Chuck Wrench SG2 .	81,00
892	2	2 603 490 022	Screw 4x16 .	30,00
893	1	2 601 035 001	Cable Clip .	44,00
895	1	3 605 430 003	Grease Tube Albida .	1.473,00

Please observe: Repairing, modifying and testing of electro-tools are to be performed professionally.The safety regulations according to IEC, EN, VDE, AFNOR and other regulations of the individual countries are to be observed. Subject to change.
This price list supersedes all previous edition. Prices are subjected to change without any prior notice.

BOSCH Power Tools	Impact drill SB1	Model GSB 500 RE 3 601 B16 1F6 | BO

3 601 B16 1B0
Stand ~~13-07~~
Issue 14-02-27
Fig./Abb. 1

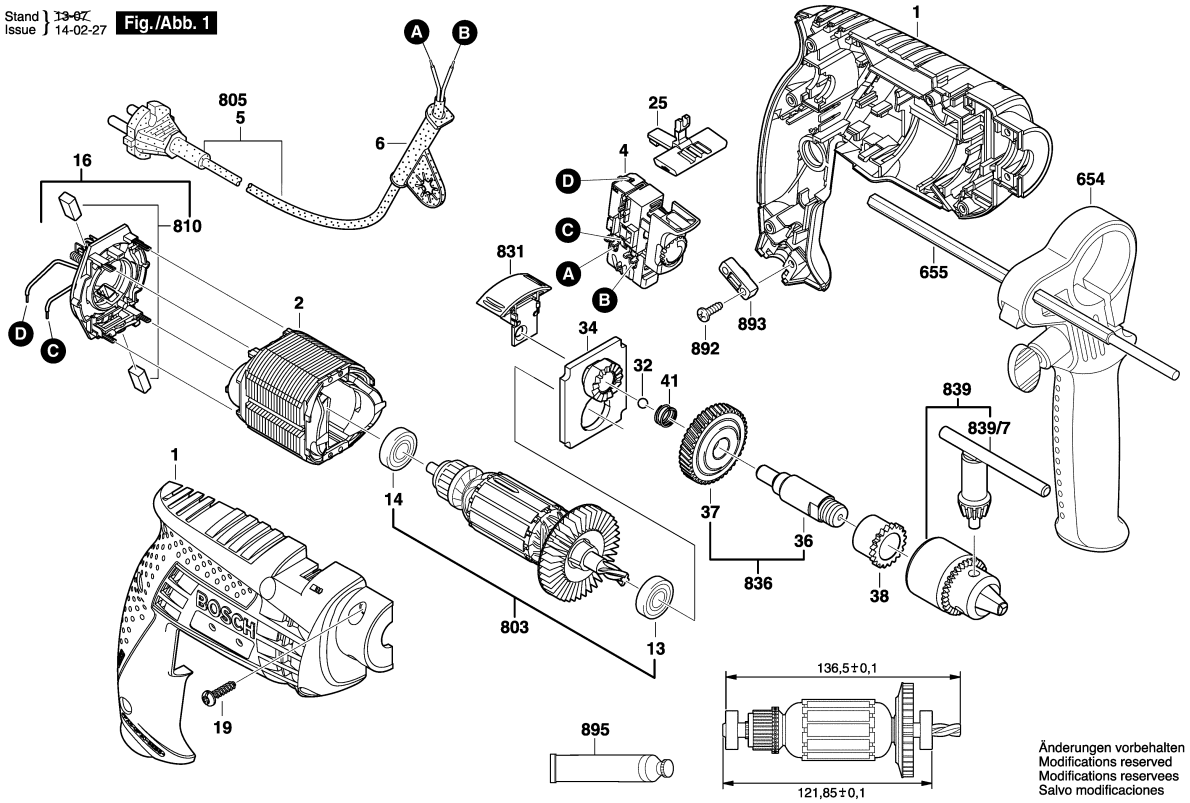

Model: 3 601 B16 1F6 = 230 | Date:

Item	Pc	Order no.	Description	LP IN INR
1	1	2 609 100 427	Motor Housing .	357,00
2	1	2 604 220 718	Field 230V .	381,00
4	1	2 607 200 623	Switch .	366,00
5	1	1 604 460 72V	Power supply cord IND	112,00
6	1	2 600 707 059	Grommet Ø6,9 MM .	67,00
13	1	2 609 110 153	Ball Bearing 8x22x7 .	43,00
14	1	2 609 110 491	Ball Bearing .	39,00
16	1	2 609 120 317	Brush Plate .	225,00
19	7	2 603 490 022	Screw 4x16 .	30,00
25	1	2 609 100 580	Lever .	45,00
32	1	1 903 230 010	Ball DIN 5401-5,5MM-III-ST	31,00
34	1	2 609 199 073	Bearing Bracket .	103,00
36	1	2 609 110 440	Spindle .	153,00
37	1	2 606 320 092	Conversion Gear .	128,00
38	1	2 609 110 442	Sintered-Metal Bushing .	45,00
41	1	2 604 616 006	Compression Spring .	50,00
655	1	2 603 001 009	Depth-Gauge .	215,00
803	1	2 609 120 232	Armature 220-240V .	571,00
810	1	2 610 391 290	Carbon-Brush Set .	43,00
831	1	2 609 160 127	Change-Over Switch .	71,00
836	1	2 609 160 122	Drilling Spindle .	291,00
839	1	1 608 571 079	Chuck Ø1,0-10 MM, 3/8" .	217,00
839/7	1	2 607 950 007	Chuck Wrench SG2 .	81,00
892	2	2 603 490 022	Screw 4x16 .	30,00

Item	Pc	Order no.	Description	LP IN INR
893	1	2 601 035 001	Cable Clip .	44,00

Please observe: Repairing, modifying and testing of electro-tools are to be performed professionally.The safety regulations according to IEC, EN, VDE, AFNOR and other regulations of the individual countries are to be observed. Subject to change.
This price list supersedes all previous edition. Prices are subjected to change without any prior notice.

BOSCH Power Tools	Impact drill SB1	Model GSB 501 3 601 B16 1F8 | BO

3 601 B16 1F8

Stand / Issue } 15-11-18 **Fig./Abb. 1**

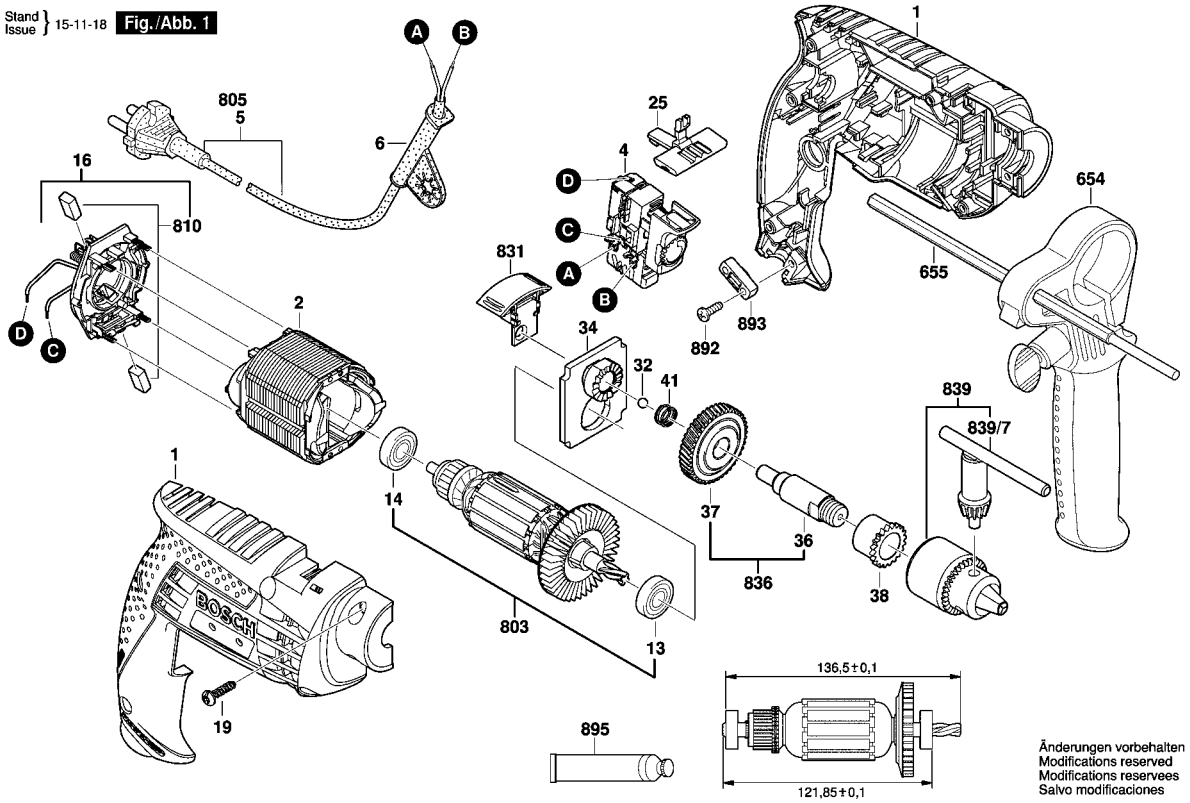

Model: 3 601 B16 1F8 = 230 | Date:

Item	Pc	Order no.	Description	LP in INR
1	1	2 609 100 427	Motor Housing .	357,00
2	1	2 604 220 718	Field 230V .	381,00
4	1	2 607 200 623	Switch .	366,00
5	1	1 604 460 72V	Power supply cord IND	112,00
6	1	2 600 707 059	Grommet Ø6,9 MM .	67,00
13	1	2 609 110 153	Ball Bearing 8x22x7 .	43,00
14	1	2 609 110 491	Ball Bearing .	39,00
16	1	2 609 120 317	Brush Plate .	225,00
19	7	2 603 490 022	Screw 4x16 .	30,00
25	1	2 609 100 580	Lever .	45,00
32	1	1 903 230 010	Ball DIN 5401-5,5MM-III-ST	31,00
34	1	2 609 199 073	Bearing Bracket .	153,00
36	1	2 609 110 440	Spindle .	153,00
37	1	2 606 320 092	Conversion Gear .	128,00
38	1	2 609 110 442	Sintered-Metal Bushing .	45,00
41	1	2 604 616 006	Compression Spring .	50,00
654	1	2 602 025 094	Auxiliary Handle .	158,00
655	1	2 609 005 615	Depth-Gauge .	92,00
803	1	2 609 120 232	Armature 220-240V .	571,00
810	1	2 610 391 290	Carbon-Brush Set .	43,00
831	1	2 609 160 127	Change Over Switch	43,00
836	1	2 609 160 122	Drilling Spindle .	291,00
839	1	2 608 571 076	Chuck .	239,00
839/7	1	2 607 950 007	Chuck Wrench SG2 .	81,00

Item	Pc	Order no.	Description	LP in INR
892	2	2 603 490 022	Screw 4x16 .	30,00
893	1	2 601 035 001	Cable Clip .	44,00
895	1	3 605 430 003	Grease Tube Albida .	1.473,00

Please observe: Repairing, modifying and testing of electro-tools are to be performed professionally.The safety regulations according to IEC, EN, VDE, AFNOR and other regulations of the individual countries are to be observed. Subject to change.
This price list supersedes all previous edition. Prices are subjected to change without any prior notice.

BOSCH Power Tools	Percussion Drill	Model GSB 550 3 601 AA1 5L1 | BO

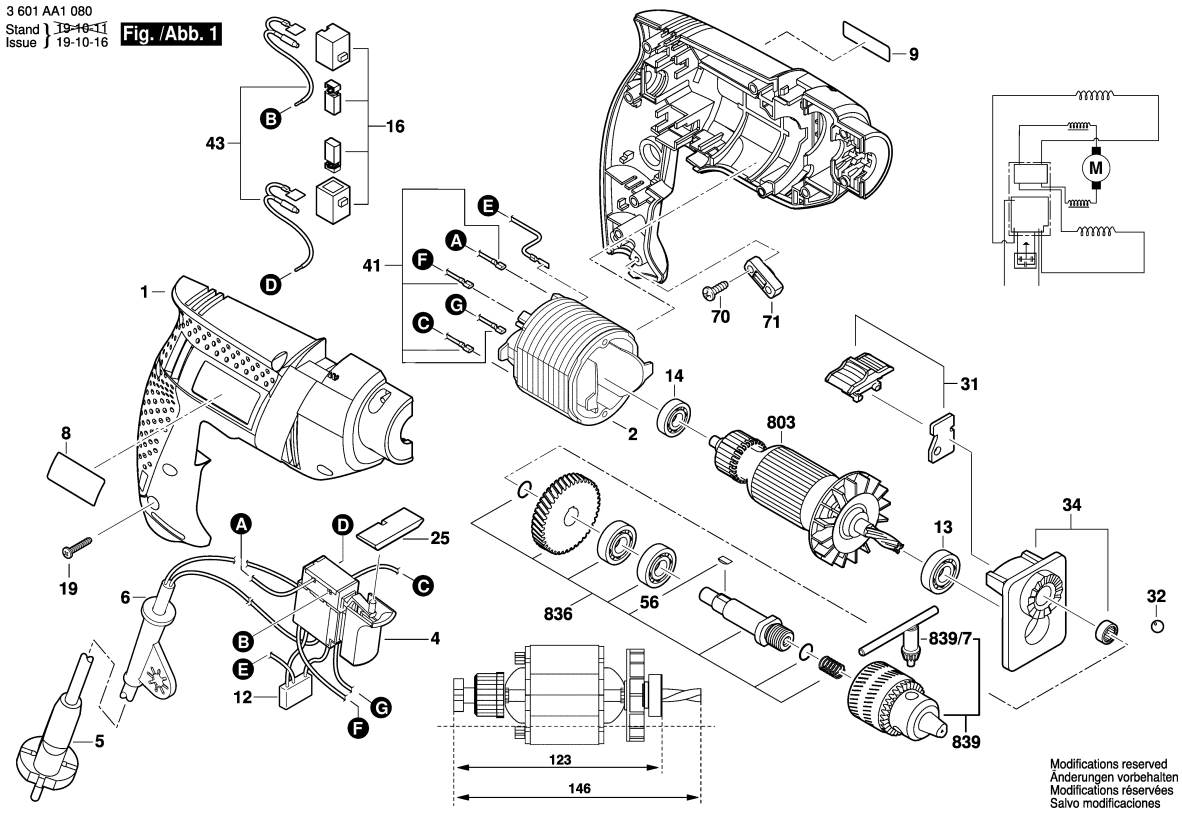

1 / 2

Model: 3 601 AA1 5L1 = 230 | Date:

Item	Pc	Order no.	Description	LP IN INR
1	1	1 619 PB4 746	Housing .	618,00
2	1	1 619 PA0 678	Field 220-240V .	469,00
4	1	1 619 PA0 679	On-Off Switch .	394,00
5	1	1 619 PA0 877	Power supply cord .	
6	1	1 619 PB2 058	Grommet Ø 9 mm .	29,00
12	1	1 619 PA0 702	Suppression Capacitor .	110,00
13	1	1 619 PA0 681	groove ball bearing .	86,00
14	1	1 619 PA0 680	groove ball bearing .	60,00
16	1	1 619 PA1 407	Carbon-Brush Set .	100,00
19	9	1 619 PA0 683	Torx Oval-Head Screw .	29,00
25	1	1 619 PA0 684	Lever .	29,00
31	1	1 619 PA0 701	Change-Over Switch .	29,00
32	1	F 000 615 033	Ball .	29,00
34	1	1 619 PA0 685	Bearing Bracket .	149,00
41	1	1 619 PA6 599	Cable .	47,00
43	1	1 619 PA0 703	Suppressor Box .	118,00
56	1	1 619 PA0 690	Woodruff Key .	29,00
70	2	F 000 616 083	Tapping Screw .	29,00
71	1	F 000 616 084	Fastening Clamp .	29,00
651	1	1 619 PB4 323	Auxiliary Handle .	327,00
698	1	2 603 001 009	Depth-Gauge .	215,00
803	1	1 619 PA0 697	Armature 220-240V .	728,00
836	1	1 619 PA1 858	Drilling Spindle .	439,00
839	1	1 619 PA1 689	Key Chuck .	269,00
839/7	1	1 619 PA0 694	Chuck Wrench .	49,00

Please observe: Repairing, modifying and testing of electro-tools are to be performed professionally.The safety regulations according to IEC, EN, VDE, AFNOR and other regulations of the individual countries are to be observed. Subject to change.
This price list supersedes all previous edition. Prices are subjected to change without any prior notice.

3 601 AA1 080
Stand / Issue } 10-12-07 **Fig. /Abb. 2**

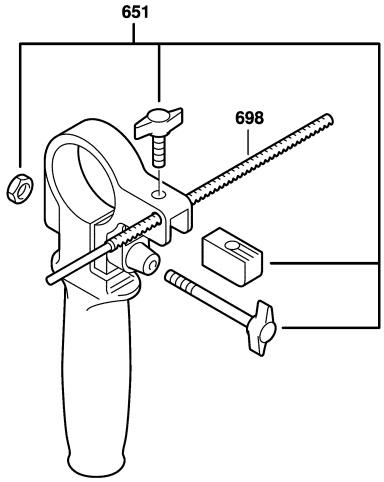

Modifications reserved
Änderungen vorbehalten
Modifications réservées
Salvo modificaciones

Model: 3 601 AA1 5L1 = 230	Date:

Item	Pc	Order no.	Description	LP IN INR	Item	Pc	Order no.	Description	LP IN INR

Please observe: Repairing, modifying and testing of electro-tools are to be performed professionally.The safety regulations according to IEC, EN, VDE, AFNOR and other regulations of the individual countries are to be observed. Subject to change.
This price list supersedes all previous edition. Prices are subjected to change without any prior notice.

BOSCH Power Tools	Drill	Model GSB 600 3 601 AA0 3F0 | BO

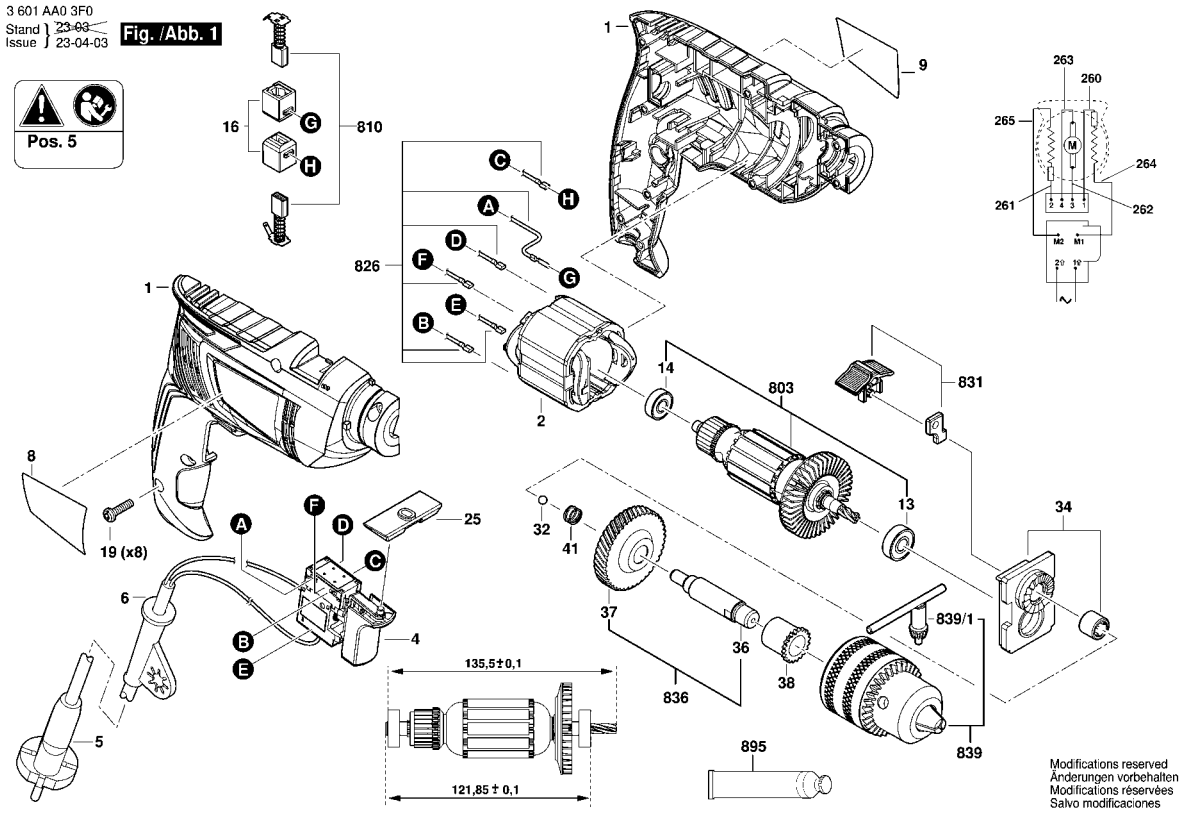

Model: 3 601 AA0 3F0 = 230 | Date:

Item	Pc	Order no.	Description	LP in INR
1	1	1 619 X10 000	Motor Housing .	290,00
2	1	1 616 B10 269	Field 220-230 V .	320,00
4	1	1 607 200 394	Switch .	265,00
5	1	1 604 460 72V	Power supply cord IND	112,00
6	1	2 600 707 059	Grommet Ø6,9 MM .	67,00
8	1	1 619 X10 002	Nameplate .	
9	1	1 619 X10 003	Manufacturer's nameplate .	
13	1	2 609 110 153	Ball Bearing 8x22x7 .	43,00
14	1	2 609 110 491	Ball Bearing .	39,00
16	2	1 619 X04 200	Brush Holder .	50,00
19	8	2 603 490 022	Screw 4x16 .	30,00
25	1	1 619 X10 004	Reversing Switch .	26,00
32	1	1 903 230 010	Ball DIN 5401-5,5MM-III-ST	31,00
34	1	1 600 A02 UH3	Bearing Bracket .	327,00
36	1	1 619 X10 009	Drilling Spindle .	110,00
37	1	2 606 320 092	Conversion Gear .	128,00
38	1	1 619 X10 010	Sintered-Metal Bushing .	37,00
41	1	2 604 616 006	Compression Spring .	50,00
651	1	2 603 001 009	Depth-Gauge .	215,00
652	1	2 609 199 582	Auxiliary Handle .	486,00
803	1	1 604 010 BU4	Armature .	563,00
810	1	2 610 391 290	Carbon-Brush Set .	43,00
826	1	1 600 A02 W6S	Connecting Cable .	97,00
831	1	1 600 A02 UH4	Change-Over Switch .	38,00

Item	Pc	Order no.	Description	LP in INR
836	1	1 600 A02 UH5	Drilling Spindle .	225,00
839	1	2 608 571 076	Chuck .	239,00
839/1	1	2 607 950 007	Chuck Wrench SG2 .	81,00
895	1	3 605 430 003	Grease Tube Albida .	1.473,00

Please observe: Repairing, modifying and testing of electro-tools are to be performed professionally.The safety regulations according to IEC, EN, VDE, AFNOR and other regulations of the individual countries are to be observed. Subject to change.
This price list supersedes all previous edition. Prices are subjected to change without any prior notice.

3 601 AA0 3F0
Stand / Issue } 23-03-16 **Fig. /Abb. 2**

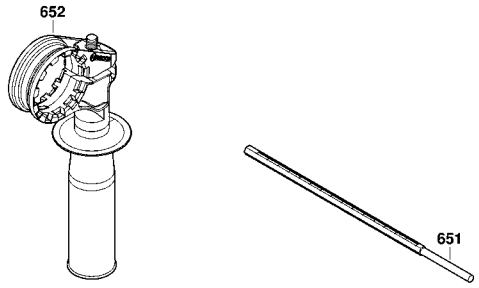

Modifications reserved
Änderungen vorbehalten
Modifications réservées
Salvo modificaciones

Model: 3 601 AA0 3F0 = 230 | Date:

Item	Pc	Order no.	Description	LP in INR	Item	Pc	Order no.	Description	LP in INR

Please observe: Repairing, modifying and testing of electro-tools are to be performed professionally.The safety regulations according to IEC, EN, VDE, AFNOR and other regulations of the individual countries are to be observed. Subject to change.
This price list supersedes all previous edition. Prices are subjected to change without any prior notice.

BOSCH Power Tools	Rotary Hammer	Model GBH 200 3 611 B58 3F3 | BO

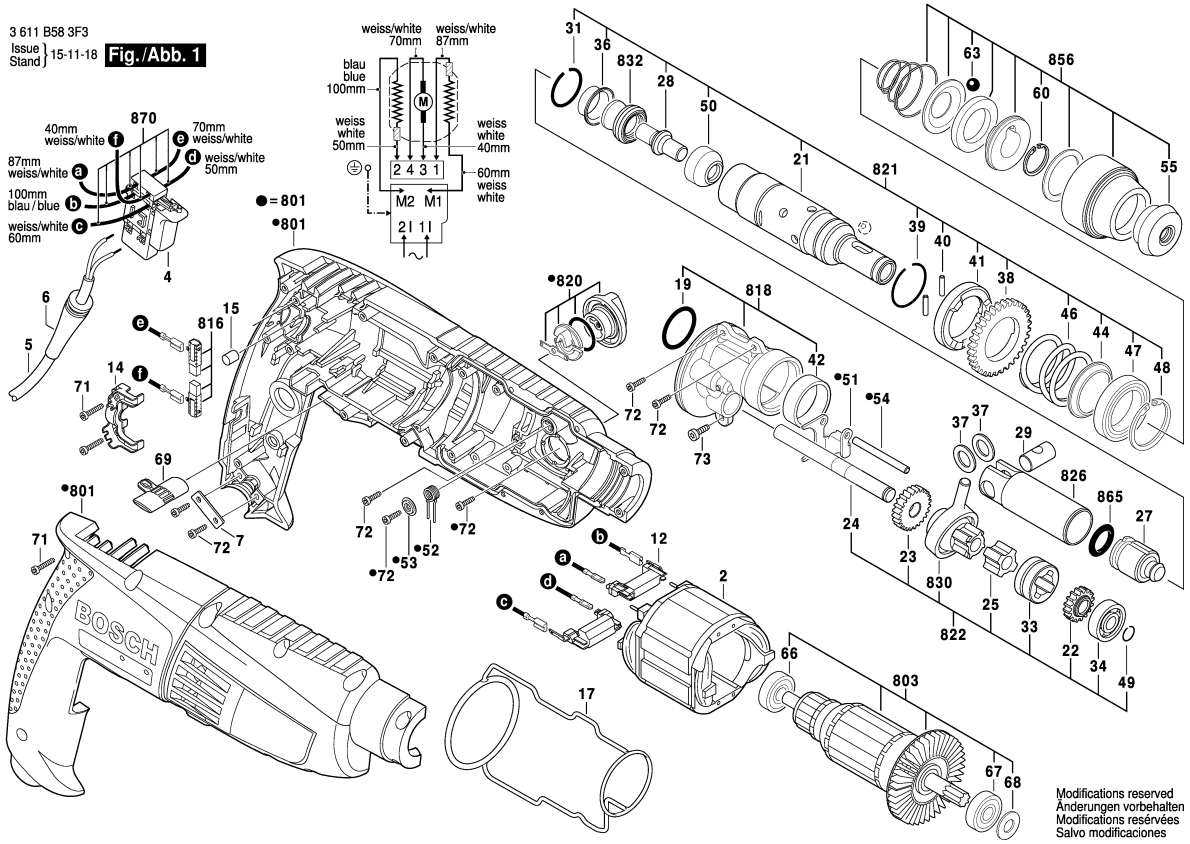

1 / 2

Model: 3 611 B58 3F3 = 220	Date:

Item	Pc	Order no.	Description	LP IN INR
2	1	1 614 220 182	Field 230V .	289,00
4	1	1 617 200 515	On-Off Switch .	269,00
5	1	1 604 460 72W	Power supply cord .	302,00
6	1	2 600 703 018	Grommet Ø7,3-Ø8,6x76	28,00
7	1	1 611 035 007	Cable Clip .	28,00
12	2	1 600 A00 32J	Adapter module .	85,00
14	1	1 615 806 187	Bearing Bracket .	28,00
15	2	2 603 100 056	Damping rubber .	52,00
17	1	1 611 015 055	Sealing Frame .	55,00
19	1	1 610 210 184	O-Ring 22,0x2,5 MM .	30,00
21	1	1 615 806 188	Hammer Pipe .	435,00
22	1	1 616 317 069	Pinion .	144,00
23	1	1 616 317 070	Cylindrical Gear .	72,00
24	1	1 613 101 011	Transmission Shaft .	41,00
25	1	1 616 409 023	Coupling hub .	28,00
27	1	1 618 710 085	Striker .	98,00
28	1	1 613 124 084	Striker Pin .	32,00
29	1	1 613 100 034	Piston Pin .	30,00
31	1	1 614 601 053	Retaining ring .	28,00
33	1	1 610 322 014	Switching Element .	61,00
34	1	1 610 905 034	Ball Bearing 8x22x6 .	38,00
36	1	1 610 551 008	Holding Plate .	45,00
37	2	1 610 100 016	Guide Disc .	45,00
38	1	1 616 317 072	Cylindrical Gear .	91,00

Item	Pc	Order no.	Description	LP IN INR
39	1	1 614 601 055	Retaining ring .	30,00
40	2	1 613 100 032	Straight Pin .	30,00
41	1	1 610 102 072	Ratchet Disc .	111,00
42	1	1 610 301 004	Plain bearing .	56,00
44	1	1 610 190 054	Support Disc .	42,00
46	1	1 614 630 002	Compression Spring .	28,00
47	1	1 610 905 035	Ball Bearing .	70,00
48	1	1 614 601 054	Retaining ring .	42,00
49	1	1 619 P00 829	Retaining ring .	30,00
50	1	1 600 A00 FL3	Thrust Ring .	123,00
51	1	1 613 231 014	Shift Plate .	29,00
52	1	1 614 690 005	Coiled Spring .	42,00
53	3	1 619 P00 828	Pressure Disc .	28,00
54	1	1 613 100 033	Guide Rod .	42,00
55	1	1 610 508 052	Protective Cap .	45,00
60	1	1 614 601 077	Spring retaining ring .	56,00
63	1	1 903 230 013	Ball DIN 5401-Ø7MM-III-ST	70,00
66	1	1 900 905 029	Ball Bearing 8x22x7 .	39,00
67	1	1 610 905 033	Ball Bearing .	61,00
68	1	1 614 601 052	Plain Washer .	28,00
69	1	1 613 231 016	Change-Over Switch .	28,00
71	15	1 619 P00 219	Tapping Screw .	45,00
72	6	1 619 P00 220	Torx Oval-Head Screw	30,00
73	3	2 914 201 483	Torx Oval-Head Screw .	30,00

Please observe: Repairing, modifying and testing of electro-tools are to be performed professionally.The safety regulations according to IEC, EN, VDE, AFNOR and other regulations of the individual countries are to be observed. Subject to change.
This price list supersedes all previous edition. Prices are subjected to change without any prior notice.

3 611 B58 3F3
Issue Stand 15-11-11 **Fig./Abb. 2**

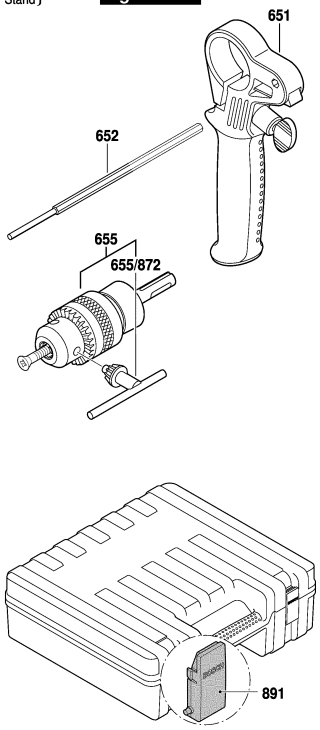

Modifications reserved
Änderungen vorbehalten
Modifications resérvées
Salvo modificaciones

Model: 3 611 B58 3F3 = 220 | Date:

Item	Pc	Order no.	Description	LP IN INR	Item	Pc	Order no.	Description	LP IN INR
651	1	2 602 025 149	Auxiliary Handle .	88,00					
652	1	1 613 001 009	Depth-Gauge SW 6x210	167,00					
655	1	1 608 571 069	Chuck Ø1,5-13 MM, 1/2" .	411,00					
655/872	1	2 607 950 007	Chuck Wrench SG2 .	81,00					
801	1	1 619 P01 769	Housing Set .	487,00					
803	1	1 619 P01 771	Armature 220-240V .	547,00					
816	1	1 619 P01 777	Carbon-Brush Set .	114,00					
818	1	1 619 P01 772	Intermediate Flange .	217,00					
820	1	1 619 P01 783	Switch Button .	40,00					
821	1	1 619 P01 773	Hammer Pipe .	866,00					
822	1	1 619 P01 767	Transmission Shaft .	616,00					
826	1	1 618 700 083	Hammer Piston .	158,00					
830	1	1 619 P01 775	Drive bearing .	509,00					
832	1	1 619 P07 426	Rubber Bushing .	93,00					
856	1	1 619 P02 182	Protection Sleeve .	118,00					
865	1	1 610 210 186	O-Ring 13,0x3,0 MM .	32,00					
870	1	1 619 P01 776	Connecting Cable .	284,00					
891	1	1 619 P01 717	Lock .	61,00					

Please observe: Repairing, modifying and testing of electro-tools are to be performed professionally.The safety regulations according to IEC, EN, VDE, AFNOR and other regulations of the individual countries are to be observed. Subject to change.
This price list supersedes all previous edition. Prices are subjected to change without any prior notice.

BOSCH Power Tools	Rotary Hammer	Model GBH 220 3 611 BA6 0F0 | BO

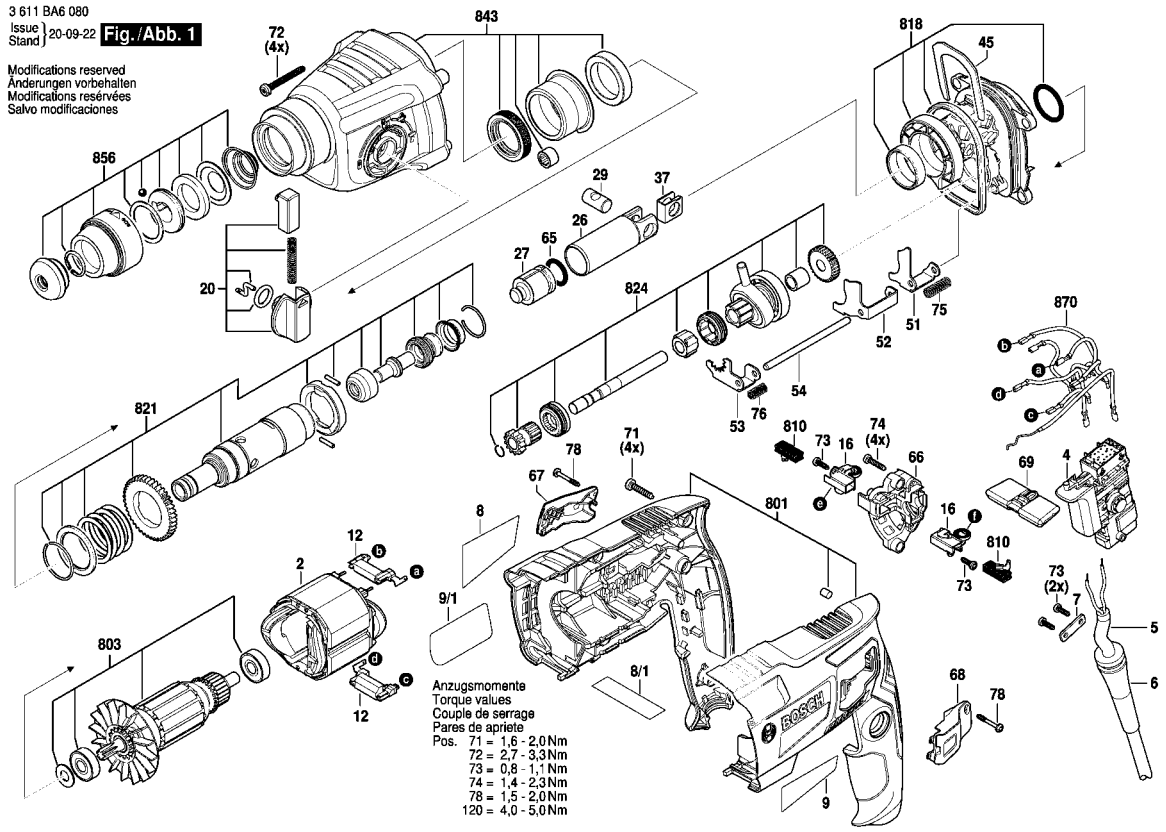

Model: 3 611 BA6 0F0 = 230 | Date:

Item	Pc	Order no.	Description	LP in INR
2	1	1 616 B10 269	Field 220-230 V .	320,00
4	1	1 607 200 372	Switch .	337,00
5	1	1 604 460 72W	Power supply cord .	302,00
6	1	2 600 703 018	Grommet Ø7,3-Ø8,6x76	28,00
7	1	1 611 035 007	Cable Clip .	28,00
12	1	1 600 A00 32J	Adapter module .	85,00
16	2	1 619 P20 535	Brush Holder .	87,00
20	1	1 612 026 151	Clamp Handle BLACK	68,00
26	1	1 619 P20 540	Hammer Piston .	160,00
27	1	1 619 P20 541	Striker .	101,00
29	1	1 613 100 034	Piston Pin .	30,00
37	2	1 610 100 016	Guide Disc .	45,00
45	1	1 611 016 003	Holding Plate .	57,00
51	1	1 610 021 004	Shift Plate .	37,00
52	1	1 610 021 006	Shift Plate .	43,00
53	1	1 610 021 005	Shift Plate .	37,00
54	1	1 613 023 005	Guide Rod .	44,00
65	1	1 610 210 070	O-Ring 14,0x3,0 MM .	73,00
66	1	1 619 P20 537	Bracket .	46,00
67	1	1 619 P20 547	Insulating Cap .	43,00
68	1	1 619 P20 548	Insulating Cap .	43,00
69	1	1 619 P20 702	Change-Over Switch .	65,00
71	5	2 603 490 023	Torx Oval-Head Screw	30,00
72	4	1 619 P09 645	Torx Oval-Head Screw .	30,00

Item	Pc	Order no.	Description	LP in INR
73	4	1 619 P00 220	Torx Oval-Head Screw	30,00
74	4	1 619 P00 219	Tapping Screw .	45,00
75	1	1 614 643 025	Compression Spring .	30,00
76	1	1 614 643 023	Compression Spring .	30,00
78	2	1 619 P20 563	Tapping Screw .	107,00
651	1	2 603 001 009	Depth-Gauge .	215,00
691	1	1 615 438 409	Lock for 1 615 438	75,00
691	1	1 615 438 426	Lock for 1 615 438 395	151,00
691	1	1 615 438 431	Lock for 1 615 438 429 + 1	30,00
700	1	1 617 000 154	Drill Chuck Shank 1/2"	235,00
700/1	1	2 603 421 207	Countersunk-Head Screw	123,00
701	1	1 608 571 088	Chuck .	261,00
701/1	1	2 607 950 007	Chuck Wrench SG2 .	81,00
801	1	1 619 P16 274	Motor Housing .	405,00
803	1	1 619 P16 276	Armature .	654,00
810	1	1 617 000 525	Carbon-Brush Set 220 V /	156,00
818	1	1 619 P16 278	Intermediate Flange .	448,00
821	1	1 619 P16 280	Hammer Pipe .	963,00
822	1	1 602 025 08X	Auxiliary Handle .	578,00
822/120	1	1 602 025 07H	Auxiliary Handle .	491,00
822/124	1	1 611 316 021	Clamping Band Ø50 MM .	70,00
822/125	1	1 613 490 002	T-Head Bolt M8x40 MM .	73,00
822/802	1	1 617 000 475	Support clamp .	81,00
824	1	1 619 P16 282	Jack Shaft .	909,00

Please observe: Repairing, modifying and testing of electro-tools are to be performed professionally.The safety regulations according to IEC, EN, VDE, AFNOR and other regulations of the individual countries are to be observed. Subject to change.
This price list supersedes all previous edition. Prices are subjected to change without any prior notice.

3 611 BA6 080
Issue / Stand 20-09-16 **Fig./Abb. 2**

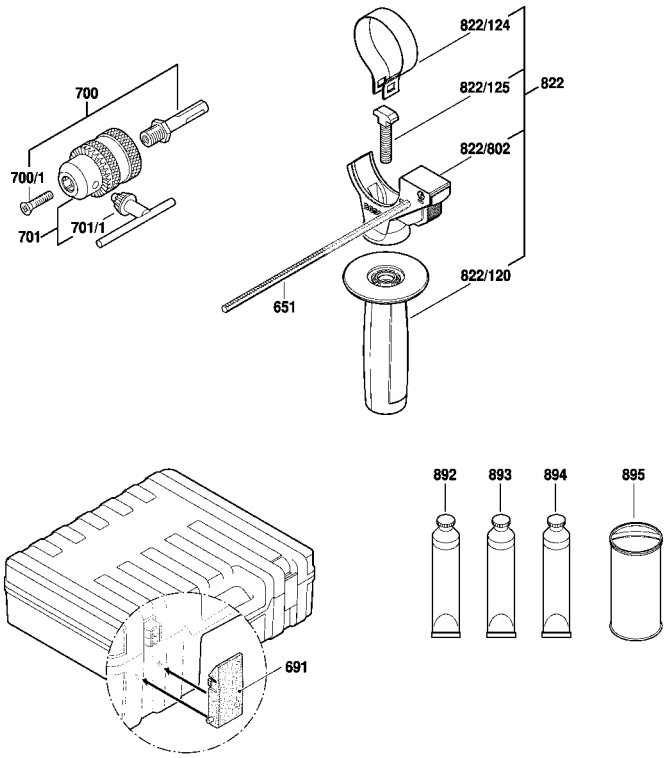

Modifications reserved
Änderungen vorbehalten
Modifications reservées
Salvo modificaciones

Model: 3 611 BA6 0F0 = 230 | Date:

Item	Pc	Order no.	Description	LP in INR
843	1	1 619 P16 284	Gear Housing .	482,00
856	1	1 617 000 6D3	Protection Sleeve .	249,00
870	1	1 619 P16 327	Connecting Cable .	200,00
892	1	1 615 430 001	Grease Tube 225 ML .	546,00
893	1	1 615 430 002	Grease Tube 225 ML .	2.780,00
894	1	1 615 430 020	Grease Tube 225 ML .	1.467,00
895	1	1 615 430 019	Oil Reservoir 1000 ML .	2.629,00

Item	Pc	Order no.	Description	LP in INR

Please observe: Repairing, modifying and testing of electro-tools are to be performed professionally.The safety regulations according to IEC, EN, VDE, AFNOR and other regulations of the individual countries are to be observed. Subject to change.
This price list supersedes all previous edition. Prices are subjected to change without any prior notice.

BOSCH Power Tools	Rotary Hammer	Model GBH 2-22 RE 0 611 250 7X0 | BO

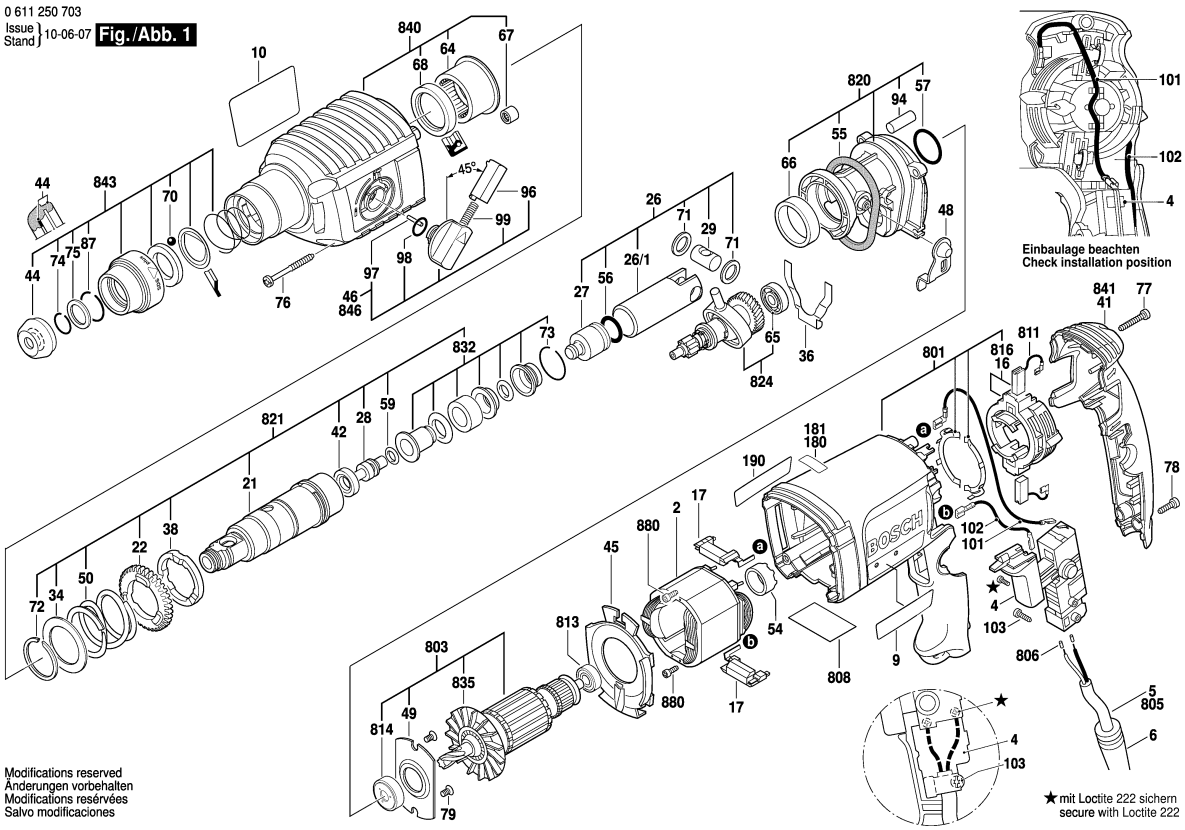

Model: 0 611 250 7X0 = 230 | Date:

Item	Pc	Order no.	Description	LP IN INR
2	1	2 604 220 683	Field 220-230V .	429,00
4	1	1 617 200 532	Switch .	628,00
5	1	1 614 460 095	Power supply cord BR	
6	1	2 600 703 018	Grommet Ø7,3-Ø8,6x76	28,00
17	1	1 600 A00 32J	Adapter module .	85,00
21	1	2 608 670 730	Ratchet Sleeve .	540,00
22	1	1 616 312 003	Cylindrical Gear .	168,00
26	1	1 617 000 534	Hammer Piston .	372,00
26/1	1	1 618 700 075	Hammer Piston .	228,00
27	1	1 618 710 080	Striker .	95,00
28	1	1 613 124 077	Striker Pin Ø7,5 MM .	134,00
29	1	1 613 105 012	Piston Pin .	55,00
34	1	1 610 190 067	Supporting Disc .	30,00
36	1	1 601 329 040	Tensioning Bracket .	44,00
38	1	1 610 190 045	Catch Disk .	133,00
41	1	1 615 500 334	Housing Cover BLUE	104,00
42	1	1 610 422 017	Backup ring .	45,00
44	1	1 610 508 047	Protective Cap .	60,00
45	1	1 610 522 012	Air-Deflector Ring .	40,00
46	1	1 612 026 097	Clamp Handle BLACK	91,00
48	1	1 601 021 005	Shift Plate .	44,00
49	1	1 615 700 044	End Shield .	57,00
50	1	1 604 611 037	Compression Spring .	77,00
54	1	1 610 502 012	Rubber Bushing .	28,00

Item	Pc	Order no.	Description	LP IN INR
55	1	1 610 290 226	Seal Ring 53,0x7,0 MM .	99,00
56	1	1 610 210 187	O-Ring .	65,00
57	1	1 610 210 068	O-Ring 24,0x2,5 MM .	49,00
59	1	1 610 210 177	O-Ring 9,0x2,0 MM .	55,00
60	1	1 610 210 176	O-Ring 9,0x3,5 MM .	30,00
64	1	1 610 202 026	Plain bearing .	89,00
65	1	1 600 900 037	groove ball bearing .	43,00
66	1	1 610 202 020	Plain bearing .	55,00
67	1	1 610 913 019	Needle bearing Ø7 MM .	74,00
68	1	1 610 283 017	Rotary shaft lip seal .	89,00
70	1	1 903 230 013	Ball DIN 5401-Ø7MM-III-ST	70,00
71	2	1 610 101 011	Shim washer 1,2 MM	49,00
72	1	1 604 601 027	Retaining ring .	30,00
73	1	1 614 601 057	Retaining ring .	28,00
74	1	1 614 601 027	Retaining ring .	30,00
75	1	1 610 101 629	Retaining Washer .	30,00
76	1	1 613 435 022	Thread-forming tap. Screw	30,00
77	1	2 603 490 024	Torx Oval-Head Screw	48,00
78	2	2 603 490 022	Screw 4x16 .	30,00
79	2	1 613 435 023	Thread-forming tap. Screw	30,00
87	1	2 916 540 012	Retaining ring DIN	30,00
94	1	1 610 205 010	Felt Seal .	31,00
96	1	1 612 026 035	Switch Button RED	48,00
97	1	1 903 201 118	Needle Roller .	28,00

Please observe: Repairing, modifying and testing of electro-tools are to be performed professionally.The safety regulations according to IEC, EN, VDE, AFNOR and other regulations of the individual countries are to be observed. Subject to change.
This price list supersedes all previous edition. Prices are subjected to change without any prior notice.

0 611 250 703
Issue Stand 10-06-07 **Fig./Abb. 2**

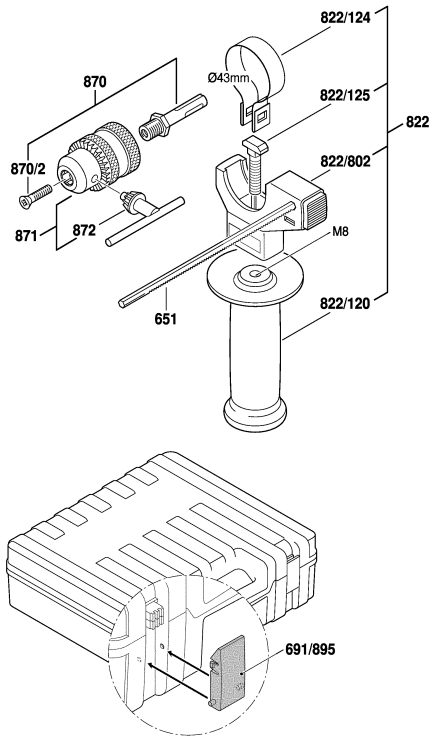

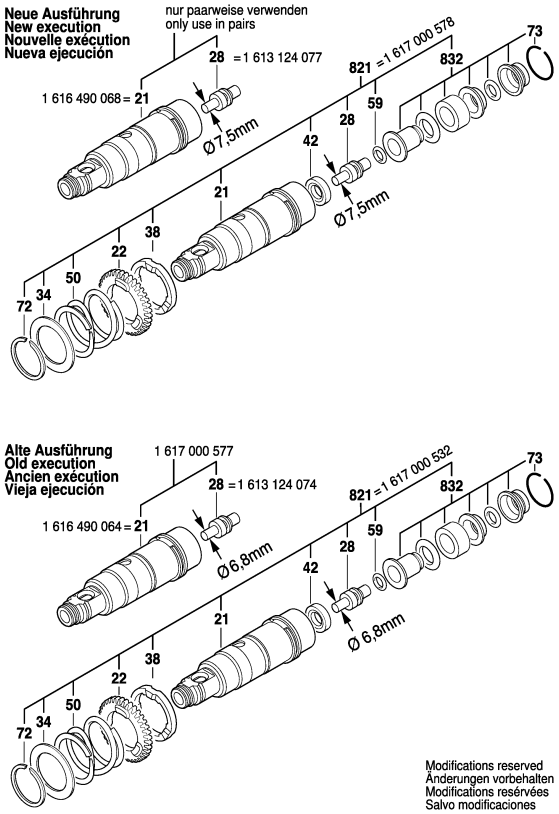

Model: 0 611 250 7X0 = 230 | Date:

Item	Pc	Order no.	Description	LP IN INR
98	1	1 610 210 046	O-Ring 10,5x2,7 MM .	51,00
99	1	1 614 611 006	Compression Spring .	70,00
101	1	1 614 449 014	Connecting Cable .	30,00
102	1	1 614 449 015	Connecting Cable .	30,00
103	1	1 619 P00 220	Torx Oval-Head Screw	30,00
651	1	2 603 001 009	Depth-Gauge .	215,00
691/895	2	1 615 438 409	Lock for 1 615 438	75,00
691/895	2	1 615 438 431	Lock for 1 615 438 429 + 1	30,00
801	1	1 619 P01 026	Motor Housing .	
803	1	1 617 000 524	Armature With Fan	1.734,00
811	1	1 617 000 525	Carbon-Brush Set 220 V /	156,00
813	1	1 610 905 025	groove ball bearing 7x19x6	183,00
814	1	1 610 905 048	groove ball bearing 9x24x7	186,00
820	1	1 617 000 526	Intermediate Flange .	375,00
821	1	1 617 000 V81	Ratchet Sleeve .	3.061,00
822	1	2 602 025 118	Auxiliary Handle Ø43 MM .	161,00
822/120	1	1 612 025 019	Auxiliary Handle M8 .	84,00
822/124	1	1 611 316 006	Clamping Band Ø43 MM .	28,00
822/125	1	1 613 490 002	T-Head Bolt M8x40 MM .	73,00
822/802	1	2 608 040 176	Support clamp Ø43 MM .	
824	1	1 617 000 892	Toothed Shaft .	1.799,00
832	1	1 617 000 529	Guide Sleeve .	218,00
835	1	1 616 610 093	Fan .	28,00
840	1	1 617 000 530	Gear Housing BLACK	964,00

Item	Pc	Order no.	Description	LP IN INR
843	1	1 617 000 531	Protection Sleeve BLACK	176,00
870	1	1 617 000 154	Drill Chuck Shank 1/2"	235,00
870/2	1	2 603 421 207	Countersunk-Head Screw	123,00
871	1	1 608 571 088	Chuck .	261,00
872	1	2 607 950 007	Chuck Wrench SG2 .	81,00
880	2	2 603 435 015	Cross Recessed-Head	44,00

Please observe: Repairing, modifying and testing of electro-tools are to be performed professionally.The safety regulations according to IEC, EN, VDE, AFNOR and other regulations of the individual countries are to be observed. Subject to change.
This price list supersedes all previous edition. Prices are subjected to change without any prior notice.

BOSCH Power Tools	Rotary Hammer	Model GBH 2-26 E 0 611 251 6X0 | BO

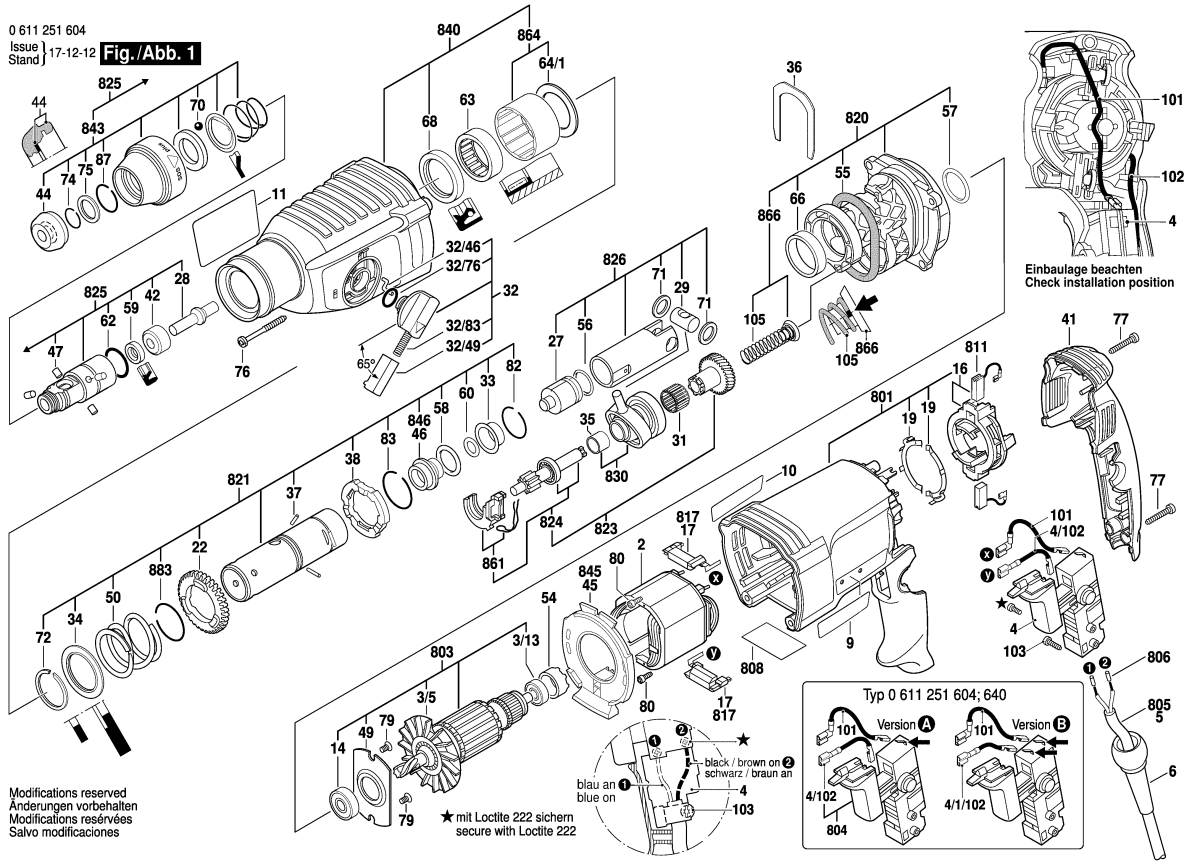

Model: 0 611 251 6X0 = 230	Date:

Item	Pc	Order no.	Description	LP IN INR
2	1	1 619 P02 428	Field 1619P02428 .	650,00
3/5	1	1 616 610 094	Fan .	68,00
3/13	1	1 610 905 025	groove ball bearing 7x19x6	183,00
4	1	1 617 200 532	Switch .	628,00
4/102	1	1 614 449 015	Connecting Cable .	30,00
5	1	1 614 460 090	Power supply cord CN	
6	1	1 600 703 034	Grommet Ø7,3-Ø8,6x66	75,00
14	1	1 619 P15 694	Ball Bearing .	
16	1	1 614 336 058	Brush Plate .	387,00
19	2	1 611 329 024	Switch Contact .	40,00
22	1	1 616 312 004	Cylindrical Gear .	279,00
27	1	1 610 311 018	Striker .	274,00
28	1	1 613 124 081	Striker Pin .	228,00
29	1	1 613 105 012	Piston Pin .	55,00
31	1	1 610 913 016	Needle-Roller Assembly .	100,00
32	1	1 612 026 157	Clamp Handle BLACK	48,00
32/46	1	1 614 690 002	Driver Pin .	48,00
32/49	1	1 612 026 035	Switch Button RED	48,00
32/76	1	1 610 210 046	O-Ring 10,5x2,7 MM .	51,00
32/83	1	1 614 611 006	Compression Spring .	70,00
33	1	1 610 590 014	Holding Jacket .	61,00
34	1	1 610 190 067	Supporting Disc .	30,00
35	1	1 610 202 024	Plain bearing .	37,00
36	1	1 611 016 003	Holding Plate .	57,00

Item	Pc	Order no.	Description	LP IN INR
37	3	1 613 100 019	Straight Pin	48,00
38	1	1 610 190 048	Catch Disk .	53,00
41	1	1 615 500 344	Housing Cover .	147,00
44	1	1 610 508 047	Protective Cap .	60,00
47	4	1 613 100 030	Needle Roller .	53,00
49	1	1 615 700 044	End Shield .	57,00
50	1	1 614 611 020	Compression Spring .	112,00
54	1	1 610 502 016	Rubber Bushing .	37,00
55	1	1 610 290 226	Seal Ring 53,0x7,0 MM .	99,00
56	1	1 616 B00 086	O-Ring .	67,00
57	1	1 610 210 068	O-Ring 24,0x2,5 MM .	49,00
58	1	1 610 210 178	O-Ring .	45,00
59	1	1 610 283 035	Rotary shaft lip seal .	74,00
60	1	1 610 210 176	O-Ring 9,0x3,5 MM .	30,00
62	1	1 610 210 179	O-Ring .	49,00
63	1	1 610 910 063	Needle bearing	158,00
64/1	1	1 610 190 060	Supporting Disc .	89,00
66	1	1 610 202 021	Plain bearing .	70,00
68	1	1 610 283 036	Rotary shaft lip seal .	152,00
70	1	1 903 230 013	Ball DIN 5401-Ø7MM-III-ST	70,00
71	2	1 610 101 011	Shim washer 1,2 MM	49,00
72	1	1 604 601 027	Retaining ring .	30,00
74	1	1 614 601 027	Retaining ring .	30,00
75	1	1 610 101 629	Retaining Washer .	30,00

Please observe: Repairing, modifying and testing of electro-tools are to be performed professionally.The safety regulations according to IEC, EN, VDE, AFNOR and other regulations of the individual countries are to be observed. Subject to change.
This price list supersedes all previous edition. Prices are subjected to change without any prior notice.

0 611 251 604
Issue / Stand 14-10-29 **Fig./Abb. 2**

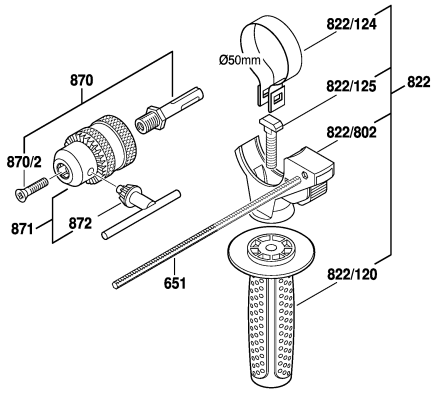

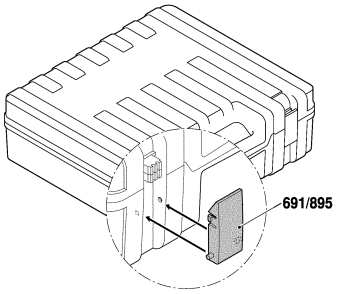

Modifications reserved
Änderungen vorbehalten
Modifications reservées
Salvo modificaciones

Model: 0 611 251 6X0 = 230 | Date:

Item	Pc	Order no.	Description	LP IN INR
76	1	1 613 435 022	Thread-forming tap. Screw	30,00
77	3	2 603 490 024	Torx Oval-Head Screw	48,00
79	2	1 613 435 023	Thread-forming tap. Screw	30,00
80	2	1 613 435 043	Screw .	37,00
82	1	1 614 601 034	Retaining ring .	30,00
83	1	1 604 601 028	Retaining ring A22 DIN	30,00
87	1	2 916 540 012	Retaining ring DIN	30,00
101	1	1 614 449 014	Connecting Cable .	30,00
105	1	1 614 611 021	Compression Spring .	45,00
651	1	2 603 001 009	Depth-Gauge .	215,00
801	1	1 617 000 V67	Motor Housing BLUE	595,00
803	1	1 619 P00 349	Armature set 1619P02709 .	2.057,00
811	1	1 617 000 525	Carbon-Brush Set 220 V /	156,00
820	1	1 617 000 6DX	Intermediate Flange .	979,00
821	1	1 617 000 564	Pipe .	1.407,00
822/124	1	1 611 316 021	Clamping Band Ø50 MM .	70,00
822/125	1	1 613 490 002	T-Head Bolt M8x40 MM .	73,00
822/802	1	1 617 000 475	Support clamp .	81,00
823	1	1 617 000 597	Toothed Shaft .	746,00
824	1	1 617 000 589	Toothed Shaft .	338,00
825	1	1 617 000 598	Tool Holding Fixture .	2.172,00
826	1	1 600 A01 U34	Hammer Piston .	
830	1	1 600 A01 U33	Drive bearing .	
840	1	1 617 000 599	Gear Housing .	826,00

Item	Pc	Order no.	Description	LP IN INR
843	1	1 617 000 582	Protection Sleeve .	278,00
861	1	1 615 820 097	Switching Element .	30,00
864	1	1 617 000 A07	Supporting Disc .	141,00
866	1	1 614 611 022	Plain bearing .	70,00
870	1	1 613 523 011	Drill Chuck Shank 1/2",	378,00
870/2	1	2 603 421 207	Countersunk-Head Screw	123,00
871	1	1 608 571 088	Chuck .	261,00
872	1	2 607 950 007	Chuck Wrench SG2 .	81,00
883	1	1 604 601 028	Retaining ring A22 DIN	30,00

Please observe: Repairing, modifying and testing of electro-tools are to be performed professionally.The safety regulations according to IEC, EN, VDE, AFNOR and other regulations of the individual countries are to be observed. Subject to change.
This price list supersedes all previous edition. Prices are subjected to change without any prior notice.

BOSCH Power Tools	Rotary Hammer	Model GBH2-26DRE 0 611 253 7X0 | BO

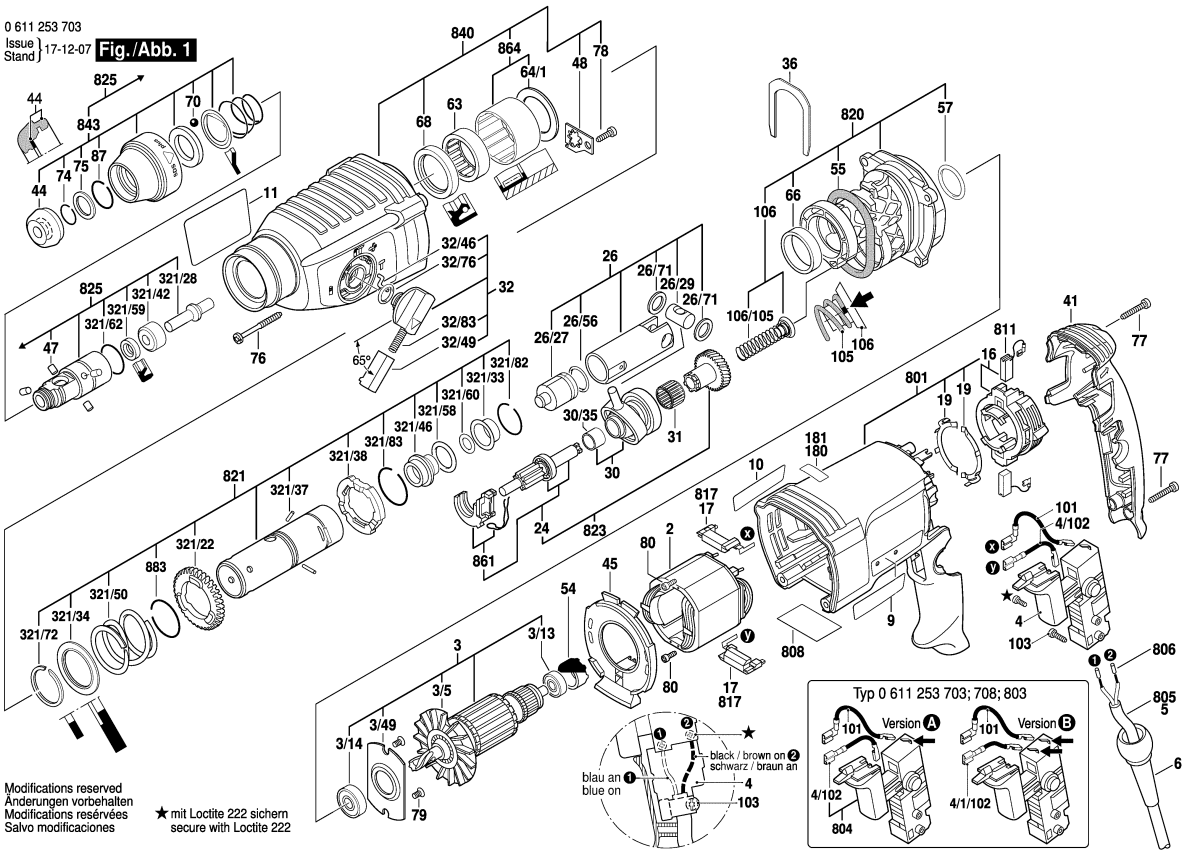

1 / 2

Model: 0 611 253 7X0 = 230 | Date:

Item	Pc	Order no.	Description	LP IN INR
2	1	1 614 220 117	Field 230V .	628,00
3	1	1 614 010 709	Armature 230V .	2.237,00
3/5	1	1 616 610 094	Fan .	68,00
3/13	1	1 610 905 025	groove ball bearing 7x19x6	183,00
3/14	1	1 610 905 048	groove ball bearing 9x24x7	186,00
3/49	1	1 615 700 044	End Shield .	57,00
4	1	1 617 200 532	Switch .	628,00
4/102	1	1 614 449 015	Connecting Cable .	30,00
5	1	1 614 460 095	Power supply cord BR	
6	1	1 600 703 034	Grommet Ø7,3-Ø8,6x66	75,00
16	1	1 614 336 061	Brush Plate .	485,00
19	2	1 611 329 024	Switch Contact .	40,00
24	1	1 617 000 6EJ	Toothed Shaft .	533,00
26	1	1 600 A01 U34	Hammer Piston .	
26/27	1	1 610 311 018	Striker .	274,00
26/29	1	1 613 105 012	Piston Pin .	55,00
26/56	1	1 610 210 187	O-Ring .	65,00
26/71	2	1 610 101 011	Shim washer 1,2 MM	49,00
30	1	1 600 A01 U33	Drive bearing .	
30/35	1	1 610 202 024	Plain bearing .	37,00
31	1	1 610 913 016	Needle-Roller Assembly .	100,00
32	1	1 612 026 037	Clamp Handle BLACK	253,00
32/46	1	1 614 690 002	Driver Pin .	48,00
32/49	1	1 612 026 035	Switch Button RED	48,00

Item	Pc	Order no.	Description	LP IN INR
32/76	1	1 610 210 046	O-Ring 10,5x2,7 MM .	51,00
32/83	1	1 614 611 006	Compression Spring .	70,00
36	1	1 611 016 003	Holding Plate .	57,00
41	1	1 615 500 343	Housing Cover BLUE	246,00
44	1	1 610 508 047	Protective Cap .	60,00
45	1	1 610 522 013	Air-Deflector Ring .	58,00
47	4	1 613 100 030	Needle Roller .	53,00
48	1	1 611 098 008	Tab Washer .	61,00
54	1	1 610 502 016	Rubber Bushing .	37,00
55	1	1 610 290 226	Seal Ring 53,0x7,0 MM .	99,00
57	1	1 610 210 068	O-Ring 24,0x2,5 MM .	49,00
63	1	1 610 910 063	Needle bearing	158,00
64/1	1	1 610 190 060	Supporting Disc .	89,00
66	1	1 610 202 021	Plain bearing .	70,00
68	1	1 610 283 036	Rotary shaft lip seal .	152,00
70	1	1 903 230 013	Ball DIN 5401-Ø7MM-III-ST	70,00
74	1	1 614 601 027	Retaining ring .	30,00
75	2	1 610 101 629	Retaining Washer .	30,00
76	1	1 613 435 022	Thread-forming tap. Screw	30,00
77	3	2 603 490 024	Torx Oval-Head Screw	48,00
78	1	2 603 490 022	Screw 4x16 .	30,00
79	2	1 613 435 023	Thread-forming tap. Screw	30,00
80	2	1 613 435 043	Screw .	37,00
87	1	2 916 540 012	Retaining ring DIN	30,00

Please observe: Repairing, modifying and testing of electro-tools are to be performed professionally.The safety regulations according to IEC, EN, VDE, AFNOR and other regulations of the individual countries are to be observed. Subject to change.
This price list supersedes all previous edition. Prices are subjected to change without any prior notice.

0 611 253 703
Issue / Stand 14-10-29 **Fig./Abb. 2**

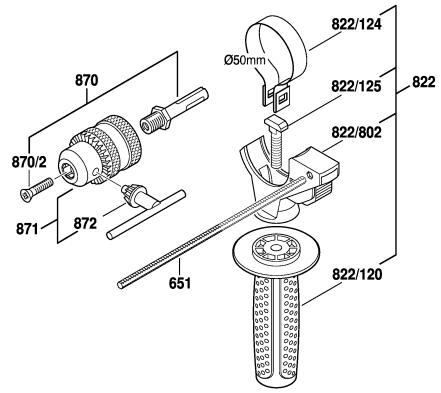

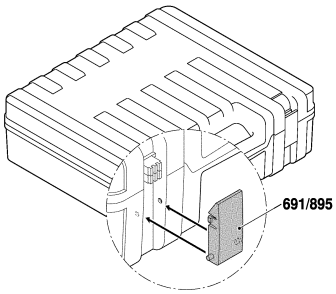

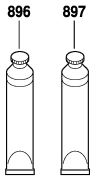

Modifications reserved
Änderungen vorbehalten
Modifications reservées
Salvo modificaciones

Model: 0 611 253 7X0 = 230 | Date:

Item	Pc	Order no.	Description	LP IN INR
101	1	1 614 449 014	Connecting Cable .	30,00
103	1	1 619 P00 220	Torx Oval-Head Screw	30,00
106	1	1 614 611 022	Plain bearing .	70,00
106/105	1	1 614 611 021	Compression Spring .	45,00
321/22	1	1 616 312 004	Cylindrical Gear .	279,00
321/28	1	1 613 124 081	Striker Pin .	228,00
321/33	1	1 610 590 014	Holding Jacket .	61,00
321/34	1	1 610 190 067	Supporting Disc .	30,00
321/37	3	1 613 100 019	Straight Pin	48,00
321/38	1	1 600 A00 8AG	Catch Disk .	94,00
321/42	1	1 610 102 073	Thrust Ring .	113,00
321/46	1	1 610 390 051	Guide Bushing .	184,00
321/50	1	1 614 611 020	Compression Spring .	112,00
321/58	1	1 610 210 178	O-Ring .	45,00
321/59	1	1 610 283 035	Rotary shaft lip seal .	74,00
321/60	1	1 610 210 176	O-Ring 9,0x3,5 MM .	30,00
321/62	1	1 610 210 179	O-Ring .	49,00
321/72	1	1 604 601 027	Retaining ring .	30,00
321/82	1	1 614 601 034	Retaining ring .	30,00
321/83	1	1 604 601 028	Retaining ring A22 DIN	30,00
651	1	2 603 001 009	Depth-Gauge .	215,00
801	1	1 617 000 558	Motor Housing BLUE	979,00
811	1	1 617 000 525	Carbon-Brush Set 220 V /	156,00
811	1	1 607 000 485	Carbon-Brush Set 10 x 1	1.529,00

Item	Pc	Order no.	Description	LP IN INR
820	1	1 617 000 6DX	Intermediate Flange .	979,00
821	1	1 617 000 564	Pipe .	1.407,00
822/124	1	1 611 316 021	Clamping Band Ø50 MM .	70,00
822/125	1	1 613 490 002	T-Head Bolt M8x40 MM .	73,00
822/802	1	1 617 000 475	Support clamp .	81,00
823	1	1 617 000 579	Toothed Shaft .	1.469,00
825	1	1 617 000 598	Tool Holding Fixture .	2.172,00
840	1	1 617 000 581	Gear Housing .	861,00
843	1	1 617 000 582	Protection Sleeve .	278,00
861	1	1 615 820 097	Switching Element .	30,00
864	1	1 617 000 A07	Supporting Disc .	141,00
870	1	1 613 523 011	Drill Chuck Shank 1/2",	378,00
870/2	1	2 603 421 207	Countersunk-Head Screw	123,00
871	1	1 608 571 088	Chuck .	261,00
872	1	2 607 950 007	Chuck Wrench SG2 .	81,00
883	1	1 604 601 028	Retaining ring A22 DIN	30,00

Please observe: Repairing, modifying and testing of electro-tools are to be performed professionally.The safety regulations according to IEC, EN, VDE, AFNOR and other regulations of the individual countries are to be observed. Subject to change.
This price list supersedes all previous edition. Prices are subjected to change without any prior notice.

BOSCH Power Tools	Rotary Hammer	Model GBH 2-28 DV 3 611 B67 1F0 | BO

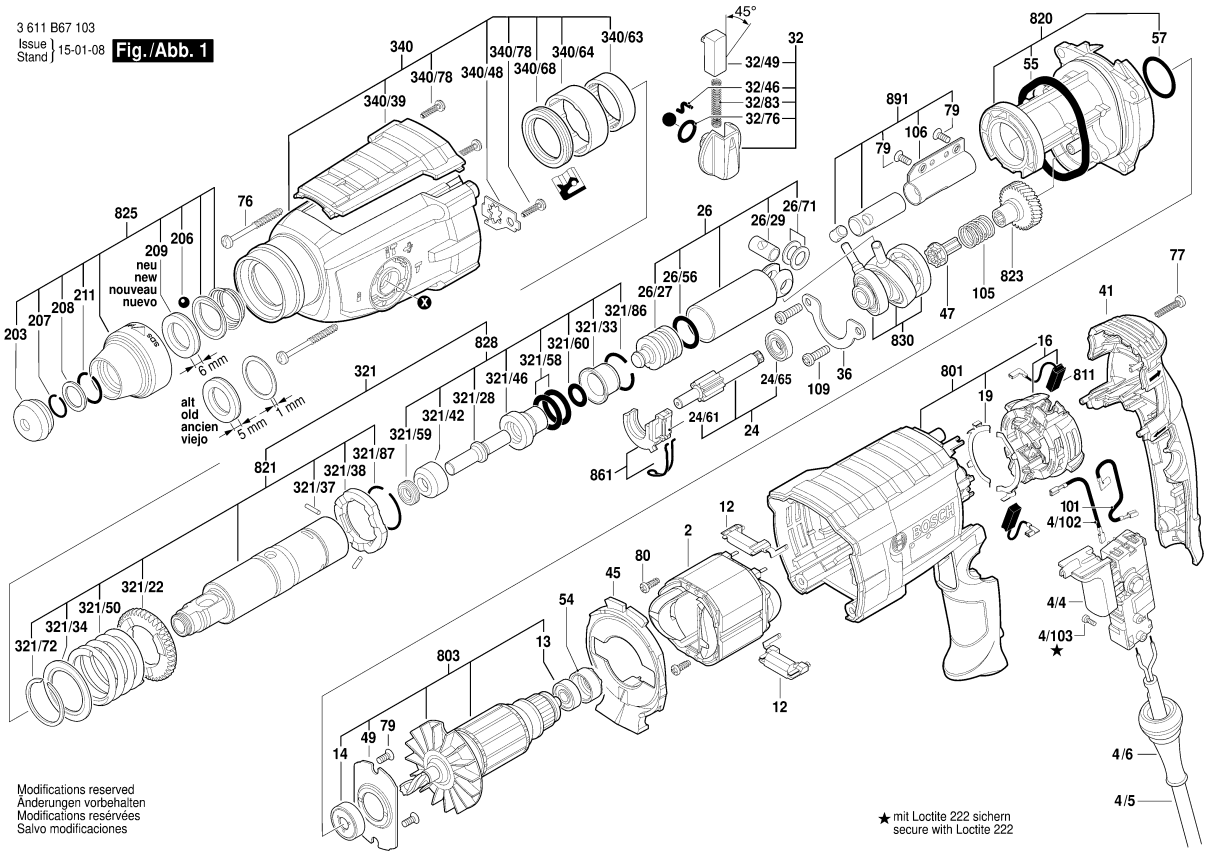

Model: 3 611 B67 1F0 = 230 | Date:

Item	Pc	Order no.	Description	LP IN INR
2	1	1 619 P11 938	Field 230V .	658,00
4/4	1	1 617 200 532	Switch .	628,00
4/5	1	1 619 P15 855	Power supply cord .	
4/6	1	1 600 703 034	Grommet Ø7,3-Ø8,6x66	75,00
4/102	1	1 614 449 015	Connecting Cable .	30,00
4/103	1	1 613 435 034	Lens Head Screw 3x10 ST	143,00
12	2	1 600 A00 32J	Adapter module .	85,00
13	1	1 610 905 032	groove ball bearing 7x19x6	45,00
14	1	1 610 905 048	groove ball bearing 9x24x7	186,00
16	1	1 619 P16 871	Brush Plate .	208,00
19	2	1 616 B10 337	Switch Contact .	50,00
24	1	1 617 000 6EJ	Toothed Shaft .	533,00
24/61	1	1 615 820 097	Switching Element .	30,00
24/65	1	1 610 905 016	groove ball bearing .	141,00
26	1	1 617 000 6A5	Hammer Piston .	1.538,00
26/27	1	1 619 P16 681	Striker .	
26/97	1	1 600 A01 TD0	Piston Pin .	80,00
26/56	1	1 610 210 121	O-Ring 17,0x3,0 MM	30,00
26/71	2	1 610 100 016	Guide Disc .	45,00
32	1	1 619 P12 076	Clamp Handle .	111,00
32/46	1	1 619 P09 571	Driver Pin .	38,00
32/49	1	1 612 026 035	Switch Button RED	48,00
32/76	1	1 610 210 046	O-Ring 10,5x2,7 MM .	51,00
32/83	1	1 614 611 006	Compression Spring .	70,00

Item	Pc	Order no.	Description	LP IN INR
36	1	1 615 808 106	Bearing Holder .	57,00
41	1	1 615 500 428	Housing Cover .	150,00
45	1	1 610 522 015	Air-Deflector Ring .	68,00
47	1	1 616 312 010	Control Element .	109,00
49	1	1 615 700 044	End Shield .	57,00
54	1	1 610 502 016	Rubber Bushing .	37,00
55	1	1 619 P18 144	O-Ring .	
57	1	1 610 210 208	O-Ring 24,0x2,0 MM .	48,00
76	4	1 613 435 022	Thread-forming tap. Screw	30,00
77	3	2 603 490 024	Torx Oval-Head Screw	48,00
79	4	1 619 P07 062	Thread-Forming Screw .	34,00
80	2	2 914 201 483	Torx Oval-Head Screw .	30,00
101	1	1 614 449 014	Connecting Cable .	30,00
105	1	1 614 643 027	Compression Spring .	57,00
106	1	1 610 590 024	Protective Sleeve .	68,00
109	2	1 613 435 014	Torx Oval-Head Screw	48,00
120	1	1 602 025 07H	Auxiliary Handle .	491,00
121	1	1 617 000 475	Support clamp .	81,00
124	1	1 611 316 021	Clamping Band Ø50 MM .	70,00
125	1	1 613 490 002	T-Head Bolt M8x40 MM .	73,00
203	1	1 610 508 047	Protective Cap .	60,00
206	1	1 613 230 003	Ball Ø7,3 MM .	53,00
207	1	1 614 601 027	Retaining ring .	30,00
208	1	1 610 101 629	Retaining Washer .	30,00

Please observe: Repairing, modifying and testing of electro-tools are to be performed professionally.The safety regulations according to IEC, EN, VDE, AFNOR and other regulations of the individual countries are to be observed. Subject to change.
This price list supersedes all previous edition. Prices are subjected to change without any prior notice.

3 611 B67 103
Issue / Stand 15-01-08 **Fig./Abb. 2**

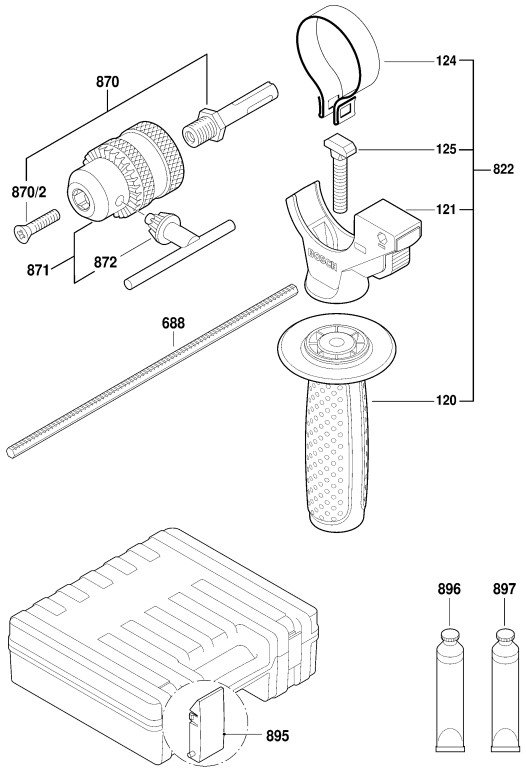

Modifications reserved
Änderungen vorbehalten
Modifications reservées
Salvo modificaciones

Model: 3 611 B67 1F0 = 230 | Date:

Item	Pc	Order no.	Description	LP IN INR
209	1	1 610 102 638	Friction Washer .	89,00
211	1	2 916 540 012	Retaining ring DIN	30,00
321	1	1 617 000 6CA	Toolholder .	3.305,00
321/22	1	1 616 312 004	Cylindrical Gear .	279,00
321/28	1	1 613 124 098	Striker Pin .	491,00
321/33	1	1 610 590 020	Holding Jacket .	87,00
321/34	1	1 610 190 067	Supporting Disc .	30,00
321/37	3	1 613 100 019	Straight Pin	48,00
321/38	1	1 600 A00 8AG	Catch Disk .	94,00
321/42	1	1 610 102 084	Thrust Ring .	93,00
321/46	1	1 610 390 068	Guide Bushing .	536,00
321/50	1	1 614 615 008	Compression Spring .	100,00
321/58	2	1 610 210 105	O-Ring 18,0x3,5 MM .	111,00
321/59	1	1 600 A00 9VC	Shaft Seal .	141,00
321/60	1	1 610 210 209	O-Ring 9,5x3,5 MM .	48,00
321/72	1	1 604 601 027	Retaining ring .	30,00
321/86	1	1 614 601 034	Retaining ring .	30,00
321/87	1	1 604 601 028	Retaining ring A22 DIN	30,00
340	1	1 617 000 6BY	Gear Housing .	912,00
340/39	1	1 605 500 2CF	Cover .	144,00
340/48	1	1 611 098 008	Tab Washer .	61,00
340/63	1	1 610 910 063	Needle bearing	158,00
340/64	1	1 610 390 069	Bushing .	112,00
340/68	1	1 610 283 036	Rotary shaft lip seal .	152,00

Item	Pc	Order no.	Description	LP IN INR
340/78	3	2 603 490 022	Screw 4x16 .	30,00
688	1	1 613 001 009	Depth-Gauge SW 6x210	167,00
801	1	1 617 000 6BS	Motor Housing .	673,00
803	1	1 619 P12 114	Armature set 230V .	1.320,00
811	1	1 617 000 525	Carbon-Brush Set 220 V /	156,00
811	1	1 607 000 485	Carbon-Brush Set 10 x 1	1.529,00
820	1	1 617 000 6BT	Intermediate Flange .	615,00
821	1	1 617 000 6C9	Tool Holding Fixture .	2.322,00
822	1	1 602 025 08X	Auxiliary Handle .	578,00
823	1	1 617 000 6BW	Gear Sleeve .	506,00
825	1	1 617 000 6CB	Tool Holding Fixture .	393,00
828	1	1 617 000 697	Striker Pin .	979,00
830	1	1 617 000 6BX	Drive bearing .	1.538,00
861	1	1 615 820 097	Switching Element .	30,00
870	1	1 613 523 011	Drill Chuck Shank 1/2",	378,00
870/2	1	2 603 421 226	Countersunk-Head Screw	42,00
871	1	1 608 571 069	Chuck Ø1,5-13 MM, 1/2" .	411,00
872	1	2 607 950 007	Chuck Wrench SG2 .	81,00
891	1	1 617 000 6BZ	Weight .	337,00
895	1	1 615 438 431	Lock for 1 615 438 429 + 1	30,00
896	1	1 615 430 001	Grease Tube 225 ML .	546,00
897	1	1 615 430 002	Grease Tube 225 ML .	2.780,00

Please observe: Repairing, modifying and testing of electro-tools are to be performed professionally.The safety regulations according to IEC, EN, VDE, AFNOR and other regulations of the individual countries are to be observed. Subject to change.
This price list supersedes all previous edition. Prices are subjected to change without any prior notice.

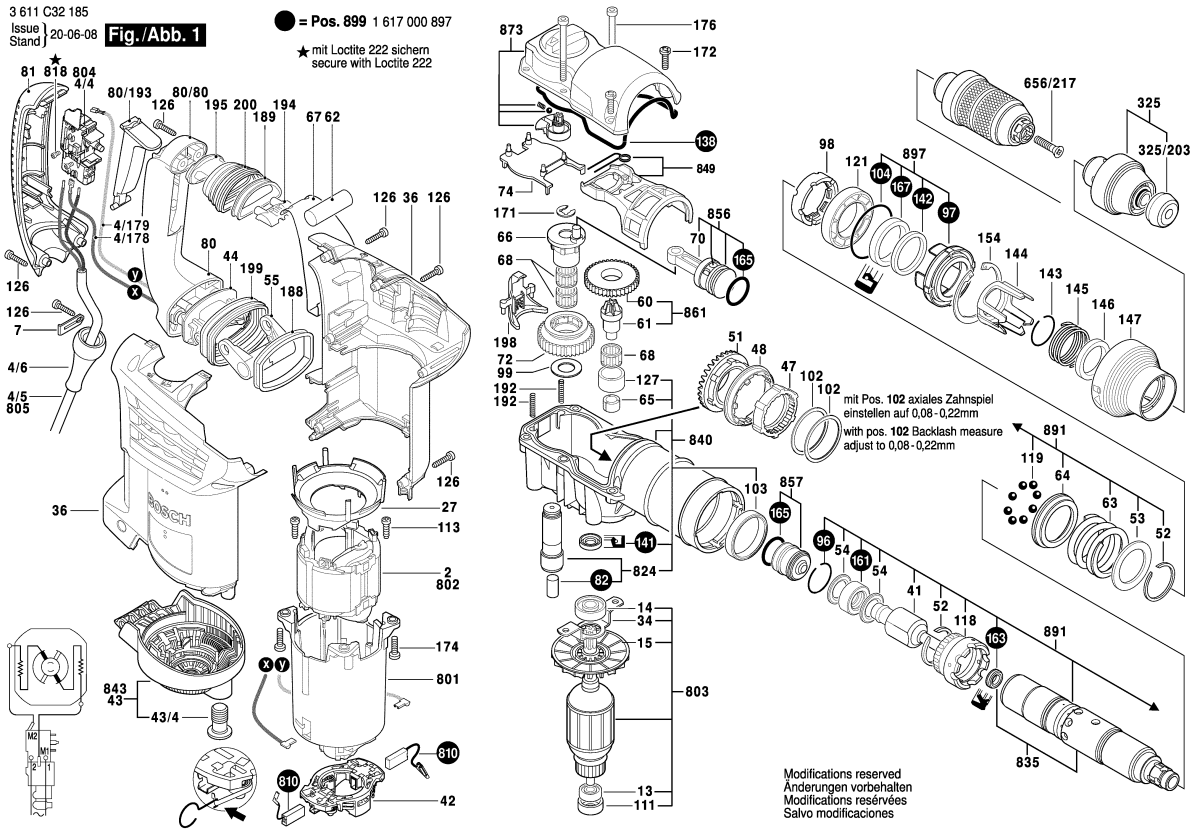

1 / 3

Model: 3 611 C32 1K5 = 230 | Date:

Item	Pc	Order no.	Description	LP IN INR
2	1	1 619 P08 340	Field 230V .	1.263,00
4/4	1	1 617 200 127	Switch .	766,00
4/5	1	1 614 460 026	Power supply cord EU	942,00
4/6	1	1 600 703 034	Grommet Ø7,3-Ø8,6x66	75,00
4/178	1	1 614 412 055	Connecting Cable .	44,00
4/179	1	1 614 412 056	Connecting Cable .	40,00
7	1	1 601 302 017	Fastening Clamp .	30,00
13	1	2 600 905 032	Ball Bearing 7x19x6 .	164,00
14	1	1 610 905 036	groove ball bearing	109,00
15	1	1 616 610 100	Fan .	98,00
27	1	1 610 591 043	Air-Deflector Ring BLACK	31,00
34	1	1 611 322 004	Fixing Plate .	83,00
36	1	1 615 104 049	Housing Section .	1.023,00
41	1	1 619 P11 442	Striker Pin .	802,00
42	1	1 614 336 072	Brush Holder .	653,00
43/4	1	1 613 490 007	Clamp Screw .	47,00
44	1	1 614 611 025	Rocker Foot BLACK	58,00
47	1	1 616 328 049	Gear Sleeve .	299,00
48	1	1 610 290 085	Clutch Sleeve .	982,00
51	1	1 616 333 044	Crown Gear .	1.743,00
52	2	1 614 601 061	Spring retaining ring .	60,00
53	1	1 610 102 634	Supporting Disc .	77,00
54	2	1 610 101 020	Stop Disc .	123,00
55	2	1 612 099 001	Rocker Arm BLACK	58,00

Item	Pc	Order no.	Description	LP IN INR
60	1	1 616 317 076	Cylindrical Gear .	401,00
61	1	1 616 333 046	Pinion .	498,00
62	1	1 610 026 002	Damping rubber .	47,00
63	1	1 614 611 026	Compression Spring .	142,00
64	1	1 616 409 024	Clutch Ring .	268,00
65	1	1 610 301 007	Plain bearing .	31,00
66	1	1 616 455 006	Eccentric .	1.396,00
67	1	1 616 232 006	Leaf Spring .	184,00
68	3	1 610 913 021	Needle-Roller Assembly .	80,00
70	1	1 612 001 041	Connecting Rod .	490,00
72	1	1 619 P11 452	Eccentric Cog Wheel .	1.068,00
74	1	1 614 336 075	Support Plate .	31,00
80/80	1	1 615 133 033	Handle BLUE	386,00
80/193	1	1 612 026 126	Switch-Pawl RED	30,00
81	1	1 617 000 6AE	Handle Cover BLACK	335,00
82	1	1 610 205 010	Felt Seal .	31,00
84	1	1 602 025 07H	Auxiliary Handle .	491,00
85	1	1 618 040 087	Support clamp .	195,00
86	1	1 613 490 002	T-Head Bolt M8x40 MM .	73,00
87	1	1 611 316 019	Clamping Band Ø62 MM .	119,00
96	1	1 614 601 060	Retaining ring .	51,00
97	1	1 610 314 005	Sealing Sleeve .	42,00
98	1	1 610 211 019	Spacer Sleeve .	35,00
99	1	1 610 101 626	Supporting Disc 1,0 MM	31,00

Please observe: Repairing, modifying and testing of electro-tools are to be performed professionally.The safety regulations according to IEC, EN, VDE, AFNOR and other regulations of the individual countries are to be observed. Subject to change.
This price list supersedes all previous edition. Prices are subjected to change without any prior notice.

3 611 C32 185
Issue / Stand 14-05-21 **Fig./Abb. 2**

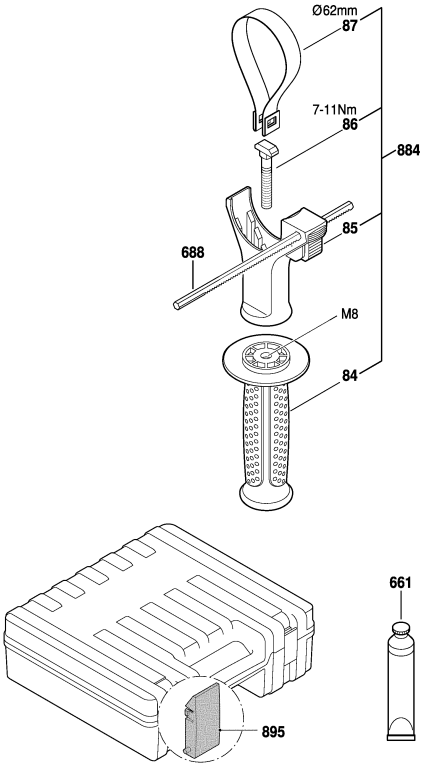

Änderungen vorbehalten
Modifications reserved
Modifications resérvées
Salvo modificaciones

Model: 3 611 C32 1K5 = 230 | Date:

Item	Pc	Order no.	Description	LP IN INR
102	2	1 610 102 079	Shim 0,8 MM THICK	50,00
102	2	1 610 102 080	Shim 0,9 MM THICK	51,00
102	2	1 610 102 081	Shim 1,0 MM THICK	62,00
103	1	1 610 200 027	Plain bearing .	108,00
104	1	1 610 210 196	O-Ring 46,0x3,5 MM .	50,00
111	1	1 600 502 023	Intermediate Ring .	68,00
113	2	1 613 435 038	Lens Head Screw .	51,00
118	1	1 616 455 007	Clutch Sleeve .	1.738,00
119	8	1 903 230 013	Ball DIN 5401-Ø7MM-III-ST	70,00
121	1	1 610 200 028	Plain bearing .	215,00
126	11	2 603 490 023	Torx Oval-Head Screw	30,00
127	1	1 610 422 021	Bushing .	104,00
138	1	1 611 015 058	Sealing Frame .	108,00
141	1	1 600 A00 89A	Rotary shaft lip seal .	213,00
142	1	1 610 205 012	Felt Washer .	51,00
143	1	2 916 540 015	Retaining ring DIN 7993-28	51,00
144	1	1 610 241 001	Collar .	31,00
145	1	1 614 611 023	Compression Spring .	51,00
146	1	1 610 200 029	Backup ring .	79,00
147	1	1 610 390 056	Guide Sleeve BLACK	80,00
154	1	1 614 601 062	Spring retaining ring .	62,00
161	1	1 610 290 092	Damping Ring .	171,00
163	1	1 600 A00 9VC	Shaft Seal .	141,00
165	2	1 610 210 199	O-Ring 21,0x3,5 MM .	51,00

Item	Pc	Order no.	Description	LP IN INR
167	1	1 610 283 030	Rotary shaft lip seal DIN	219,00
171	1	2 916 080 911	Locking Washer .	50,00
172	4	1 613 490 013	Thread-forming tap. Screw	51,00
174	4	1 613 490 014	Thread-forming tap. Screw	50,00
176	2	2 912 738 178	Socket head cap screw .	31,00
188	1	1 610 209 008	Grip-Spring Tensioning E .	30,00
189	1	1 610 209 009	Clamping Piece .	31,00
192	2	1 614 611 016	Compression Spring .	51,00
194	1	1 610 099 008	Screw Plate .	59,00
195	1	1 610 099 009	Clamping Piece .	31,00
198	1	1 612 099 000	Switch Slide .	31,00
199	1	1 610 284 002	Bellows .	146,00
200	1	1 610 284 001	Bellows .	73,00
325	1	1 619 P10 517	Tool Holding Fixture .	1.981,00
325/203	1	1 610 508 047	Protective Cap .	60,00
656/217	1	2 603 421 229	Countersunk-Head Screw	50,00
661	1	1 615 430 010	Grease Tube 30 ML .	116,00
688	1	1 613 001 008	Depth-Gauge SW 6x330	365,00
801	1	1 615 108 150	Motor Housing BLACK	597,00
803	1	1 614 010 252	Armature With Fan 230V .	3.638,00
810	1	1 614 321 079	Carbon-Brush Set .	365,00
818	2	2 603 410 001	Socket head cap screw	50,00
824	1	1 613 123 013	Eccentric Shaft .	512,00
835	1	1 615 806 229	Hammer Pipe .	4.239,00

Please observe: Repairing, modifying and testing of electro-tools are to be performed professionally.The safety regulations according to IEC, EN, VDE, AFNOR and other regulations of the individual countries are to be observed. Subject to change.
This price list supersedes all previous edition. Prices are subjected to change without any prior notice.

3 611 C32 185
Issue / Stand 14-05-21 **Fig./Abb. 2**

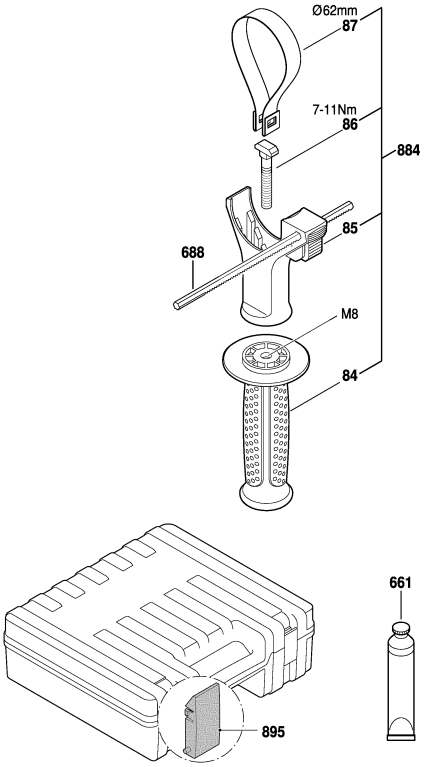

Änderungen vorbehalten
Modifications reserved
Modifications resérvées
Salvo modificaciones

Model: 3 611 C32 1K5 = 230 | Date:

Item	Pc	Order no.	Description	LP IN INR	Item	Pc	Order no.	Description	LP IN INR
840	1	1 615 190 168	Impact Mechanism	3.207,00					
843	1	1 615 500 384	Fan Cover BLACK	253,00					
849	1	1 611 329 030	Control Fork BLACK	193,00					
856	1	1 618 700 093	Hammer Piston .	463,00					
857	1	1 618 710 094	Striker .	709,00					
861	1	1 616 333 048	Pinion .	998,00					
873	1	1 615 500 411	Housing Cover .	1.116,00					
884	1	1 612 025 079	Auxiliary Handle .	767,00					
891	1	1 615 806 230	Hammer Pipe .	5.408,00					
895	1	1 615 438 426	Lock for 1 615 438 395	151,00					
897	1	1 610 314 006	Sealing Sleeve .	453,00					
899	1	1 617 000 897	Wear and Tear Part Set .	961,00					

Please observe: Repairing, modifying and testing of electro-tools are to be performed professionally.The safety regulations according to IEC, EN, VDE, AFNOR and other regulations of the individual countries are to be observed. Subject to change.
This price list supersedes all previous edition. Prices are subjected to change without any prior notice.

BOSCH Power Tools	Rotary Hammer	Model GBH 5-40 D 3 611 B69 0K0 | BO

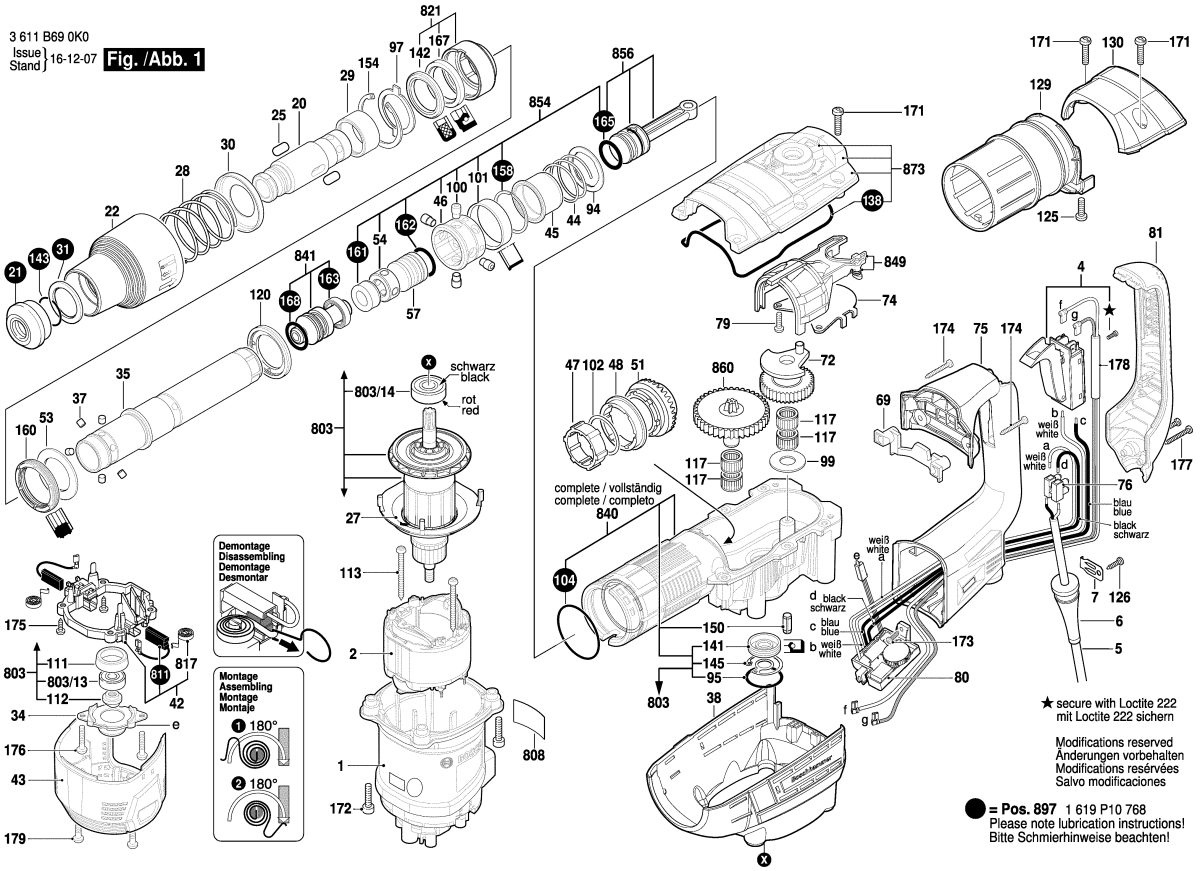

Model: 3 611 B69 0K0 = 220	Date:

Item	Pc	Order no.	Description	LP IN INR
1	1	1 619 P07 704	Motor Housing .	904,00
2	1	1 619 P08 323	Field 220-240V .	1.311,00
4	1	1 619 P10 396	Switch .	1.078,00
5	1	1 607 000 227	Power supply cord EU	2.705,00
6	1	1 619 P07 722	Grommet .	77,00
7	1	1 601 302 019	Fastening Clamp .	63,00
20	1	1 619 P10 164	Toolholder .	2.136,00
21	1	1 619 P07 829	Protective Cap .	140,00
22	1	1 619 P10 160	Protection Sleeve .	991,00
25	2	1 619 P07 742	Stopping Device .	304,00
27	1	1 619 P07 739	Air-Deflector Ring .	92,00
28	1	1 614 621 000	Compression Spring .	70,00
29	1	1 619 P10 163	Bushing .	379,00
30	1	1 619 P10 162	Supporting Disc .	98,00
31	1	1 619 P07 743	Supporting Disc .	219,00
34	1	1 619 P10 165	Flange .	106,00
35	1	1 619 P10 167	Hammer Pipe .	4.414,00
37	6	1 619 P10 377	Cylindrical Roller .	67,00
38	1	1 619 P10 168	Covering hood .	746,00
42	1	1 619 P07 754	Brush Holder .	570,00
43	1	1 619 P10 171	Fan Cover .	573,00
44	1	1 619 P10 381	Compression Spring .	101,00
45	1	1 610 499 070	Control Bushing .	488,00
46	1	1 619 P10 172	Perforated Ring .	97,00

Item	Pc	Order no.	Description	LP IN INR
47	1	1 610 300 064	Gear Sleeve .	123,00
48	1	1 616 334 012	Clutch Sleeve .	90,00
51	1	1 607 000 E7U	Spur Wheel Clutch .	4.642,00
53	1	1 610 290 068	Support Disc .	149,00
54	1	1 619 P11 329	Guide Bushing .	406,00
57	1	1 618 710 091	Striker .	838,00
69	1	1 610 099 004	Retaining Bracket .	114,00
72	1	1 600 A01 4S9	Eccentric Cog Wheel .	3.363,00
74	1	1 611 921 001	Guide Plate .	74,00
75	1	1 619 P10 176	Handle .	2.136,00
76	1	1 619 P11 754	Terminal Block .	74,00
79	2	1 613 435 015	Torx Oval-Head Screw	52,00
80	1	1 619 P09 589	Speed governor .	2.278,00
81	1	1 619 P10 177	Handle Cover .	970,00
84	1	1 612 025 060	Auxiliary Handle M8	220,00
85	1	1 619 P07 774	Support clamp .	292,00
86	1	1 613 490 002	T-Head Bolt M8x40 MM .	73,00
87	1	1 619 P07 776	Clamping Band .	116,00
94	1	1 610 102 056	Friction Washer .	73,00
95	1	1 610 210 173	O-Ring 32,0x1,5 MM .	46,00
97	1	1 610 031 005	Locking Washer .	115,00
99	1	1 610 102 059	Support Disc .	72,00
100	4	1 613 120 022	Driving Pin .	55,00
101	1	1 610 499 073	Retaining snap ring .	192,00

Please observe: Repairing, modifying and testing of electro-tools are to be performed professionally.The safety regulations according to IEC, EN, VDE, AFNOR and other regulations of the individual countries are to be observed. Subject to change.
This price list supersedes all previous edition. Prices are subjected to change without any prior notice.

3 611 B69 0K0
Issue Stand 17-03-29 **Fig./Abb. 2**

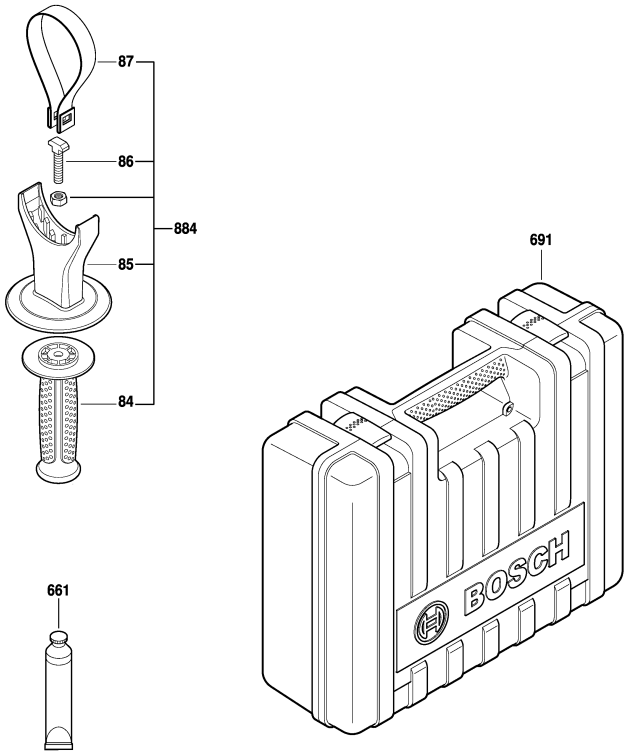

Änderungen vorbehalten
Modifications reserved
Modifications reservées
Salvo modificaciones

2 / 3

Model: 3 611 B69 0K0 = 220 | Date:

Item	Pc	Order no.	Description	LP IN INR
102	1	1 610 102 057	Shim 0,3 MM .	51,00
102	1	1 610 102 058	Shim 0,2 MM .	51,00
104	1	1 610 210 160	O-Ring 52,0x2,0 MM .	50,00
111	1	1 610 290 064	Bushing .	48,00
112	1	1 619 P10 179	Ring Magnet .	225,00
113	2	1 613 435 009	Tapping Screw	50,00
117	4	1 610 913 004	Needle-Roller Assembly	83,00
120	1	1 610 590 019	Stop Sleeve .	324,00
125	2	1 613 435 014	Torx Oval-Head Screw	48,00
126	1	2 910 211 019	Tapping Screw DIN	31,00
129	1	1 619 P10 181	Holding Sleeve .	357,00
130	1	1 619 P10 182	Cover .	175,00
138	1	1 611 015 053	Sealing Frame .	161,00
141	1	1 610 290 066	Rotary shaft lip seal .	249,00
142	1	1 619 P10 106	Rotary shaft lip seal .	143,00
143	1	1 614 601 021	Retaining ring DIN	56,00
145	1	1 610 119 012	Spring retaining ring .	50,00
150	1	2 917 790 174	Slotted Spring Pin .	38,00
154	1	2 916 660 023	Spring retaining ring DIN	65,00
158	1	1 614 601 070	Retaining ring .	64,00
160	1	1 610 290 095	Damping Ring .	328,00
161	1	1 610 290 094	Damping Ring .	310,00
162	1	1 610 210 204	O-Ring 22,5x3,5 MM .	74,00
163	1	1 610 290 065	Seal Ring .	179,00

Item	Pc	Order no.	Description	LP IN INR
165	1	1 610 210 079	O-Ring 22,0x4,0 MM .	86,00
167	1	1 610 283 033	Rotary shaft lip seal .	98,00
168	1	1 610 210 144	O-Ring 22,0x3,0 MM .	48,00
171	4	1 619 P07 816	Torx Oval-Head Screw	35,00
172	4	1 613 435 013	Torx Oval-Head Screw	46,00
173	1	2 910 611 019	Tapping Screw DIN	30,00
174	4	1 613 435 012	Torx Oval-Head Screw	46,00
175	4	1 619 P00 228	Screw .	107,00
176	2	1 613 435 012	Torx Oval-Head Screw	46,00
177	2	2 603 490 024	Torx Oval-Head Screw	48,00
178	1	1 619 P10 286	Connecting Cable .	184,00
179	2	1 619 P07 815	Screw .	35,00
661	1	1 615 430 010	Grease Tube 30 ML .	116,00
691	1	1 605 438 1D1	Carrying Case .	
803	1	1 619 P10 769	Armature 220-240V .	3.131,00
803/13	1	1 610 900 026	groove ball bearing 8x24x8	213,00
803/14	1	1 610 905 041	groove ball bearing	224,00
811	1	1 617 014 138	Carbon-Brush Set .	356,00
817	2	1 614 652 004	Spiral Spring .	285,00
821	1	1 619 P10 749	Bushing .	1.000,00
840	1	1 619 P10 770	Impact Mechanism	5.354,00
841	1	1 619 P10 752	Striker Pin .	1.872,00
849	1	1 617 000 839	Control Fork .	846,00
854	1	1 619 P10 847	Guide Bushing .	2.563,00

Please observe: Repairing, modifying and testing of electro-tools are to be performed professionally.The safety regulations according to IEC, EN, VDE, AFNOR and other regulations of the individual countries are to be observed. Subject to change.
This price list supersedes all previous edition. Prices are subjected to change without any prior notice.

3 611 B69 0K0
Issue Stand 17-03-29 **Fig./Abb. 2**

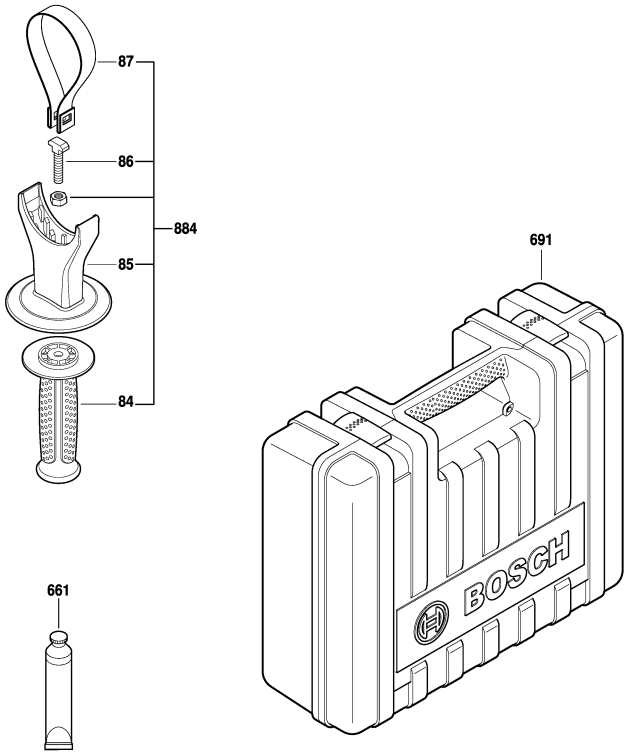

Änderungen vorbehalten
Modifications reserved
Modifications reservées
Salvo modificaciones

Model: 3 611 B69 0K0 = 220 | Date:

Item	Pc	Order no.	Description	LP IN INR
856	1	1 619 P10 765	Hammer Piston .	1.138,00
860	1	1 619 P10 766	Spur Wheel Clutch .	2.991,00
873	1	1 619 P10 767	Housing Cover .	2.012,00
884	1	1 619 P07 778	Auxiliary Handle .	911,00
897	1	1 619 P10 768	Wear and Tear Part Set .	1.380,00

Item	Pc	Order no.	Description	LP IN INR

Please observe: Repairing, modifying and testing of electro-tools are to be performed professionally.The safety regulations according to IEC, EN, VDE, AFNOR and other regulations of the individual countries are to be observed. Subject to change.
This price list supersedes all previous edition. Prices are subjected to change without any prior notice.

BOSCH Power Tools	Rotary Hammer	Model GBH 8-45 DV 3 611 B65 0K0 | BO

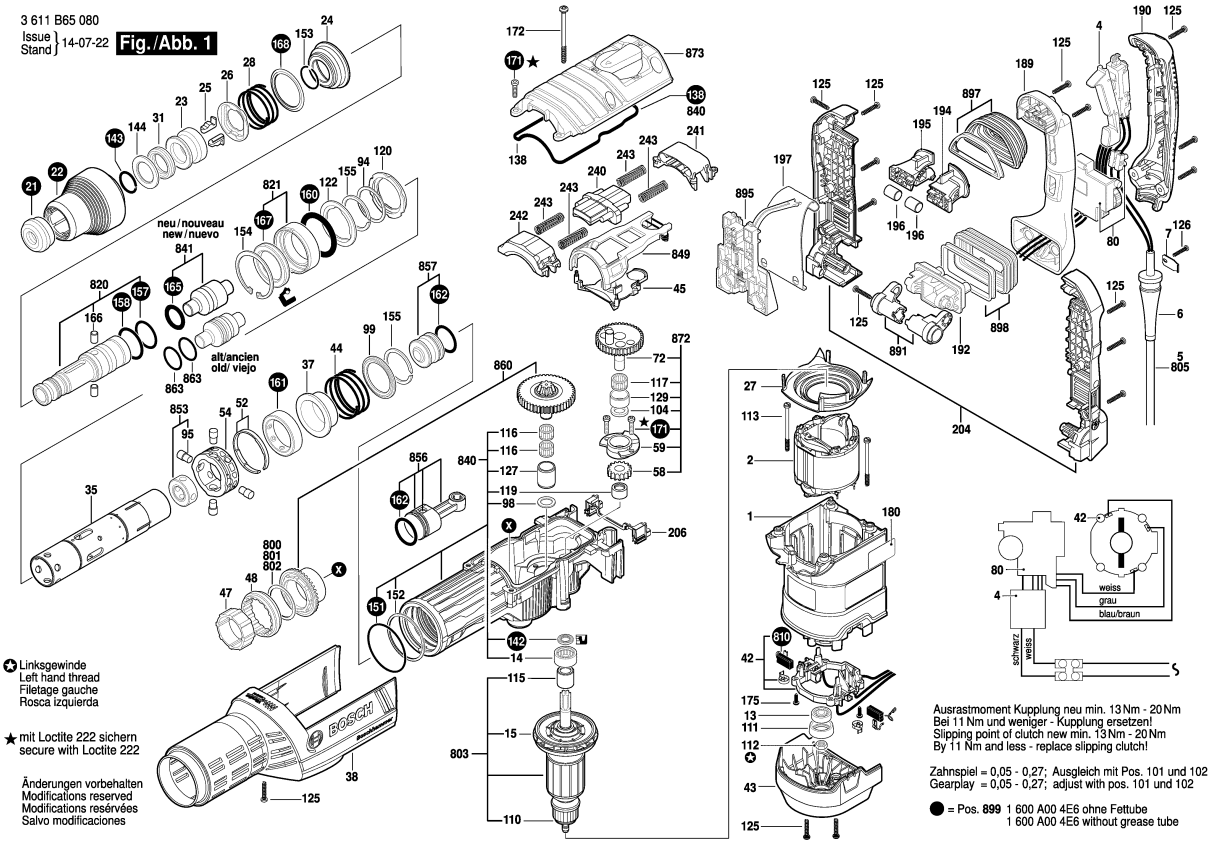

Model: 3 611 B65 0K0 = 230 | Date:

Item	Pc	Order no.	Description	LP IN INR
1	1	1 615 108 165	Motor Housing .	1.471,00
2	1	1 614 220 124	Field 220-240V .	1.660,00
4	1	1 617 200 130	Switch .	1.523,00
5	1	1 614 460 098	Power supply cord .	
6	1	1 610 703 053	Grommet Ø9,7-Ø12x89	65,00
7	1	1 601 302 018	Fastening Clamp .	51,00
9	2	1 601 11C 0U7	Manufacturer's nameplate .	
13	1	1 610 900 026	groove ball bearing 8x24x8	213,00
14	1	1 610 910 096	Needle-Roller Bearing .	679,00
15	1	1 616 610 109	Fan .	514,00
21	1	1 610 508 038	Protective Cap .	99,00
22	1	1 610 591 051	Protection Sleeve .	392,00
23	1	1 610 520 006	Stop Sleeve .	756,00
24	1	1 610 500 025	Headed Bush .	365,00
25	2	1 612 300 027	Stopping Device .	574,00
26	1	1 600 A01 9WL	Indexing Disk .	277,00
27	1	1 600 591 05C	Air-Deflector Ring .	128,00
28	1	1 614 621 010	Compression Spring .	89,00
31	1	1 610 290 129	Damping Ring .	120,00
35	1	1 615 806 249	Hammer Pipe .	5.672,00
37	1	1 610 322 018	Control Bushing .	567,00
38	1	1 615 190 177	Covering hood .	2.234,00
42	1	1 614 336 090	Brush Holder .	1.567,00
43	1	1 615 500 435	Brush-Cover .	410,00

Item	Pc	Order no.	Description	LP IN INR
44	1	1 614 621 020	Compression Spring .	162,00
45	1	1 610 591 052	Holding-Down-Appliance .	94,00
47	1	1 610 300 076	Gear Sleeve .	427,00
48	1	1 619 990 177	Clutch Sleeve .	499,00
52	1	1 610 224 015	Retaining snap ring .	48,00
54	1	1 600 A01 9Z4	Spacer Tube .	220,00
58	1	1 616 317 620	Cylindrical Gear .	570,00
59	1	1 615 805 074	Bearing Pedestal .	821,00
72	1	1 616 317 090	Eccentric Cog Wheel .	3.703,00
80	1	1 607 233 5R2	Speed governor .	3.229,00
84	1	1 602 025 07H	Auxiliary Handle .	491,00
85	1	1 618 040 095	Support clamp .	391,00
94	1	1 610 290 111	Supporting Disc .	143,00
95	4	1 613 120 023	Driving Pin .	275,00
98	1	1 610 101 015	Shim ring 1,0 MM THICK	41,00
99	1	1 600 220 029	Backup ring .	148,00
104	1	1 610 190 027	Stop Disc .	159,00
110	1	1 610 190 073	Seal Ring .	45,00
111	1	1 610 290 046	Bushing .	48,00
112	1	1 613 300 007	Hex Nut .	48,00
113	2	1 613 412 001	Tapping Screw B 4,8x68	42,00
115	1	1 610 300 086	Bushing .	298,00
116	2	1 610 913 029	Needle-Roller Assembly .	141,00
117	1	1 610 913 023	Needle-Roller Assembly .	427,00

Please observe: Repairing, modifying and testing of electro-tools are to be performed professionally.The safety regulations according to IEC, EN, VDE, AFNOR and other regulations of the individual countries are to be observed. Subject to change.
This price list supersedes all previous edition. Prices are subjected to change without any prior notice.

3 611 B65 080
Issue Stand 17-03-29 **Fig./Abb. 2**

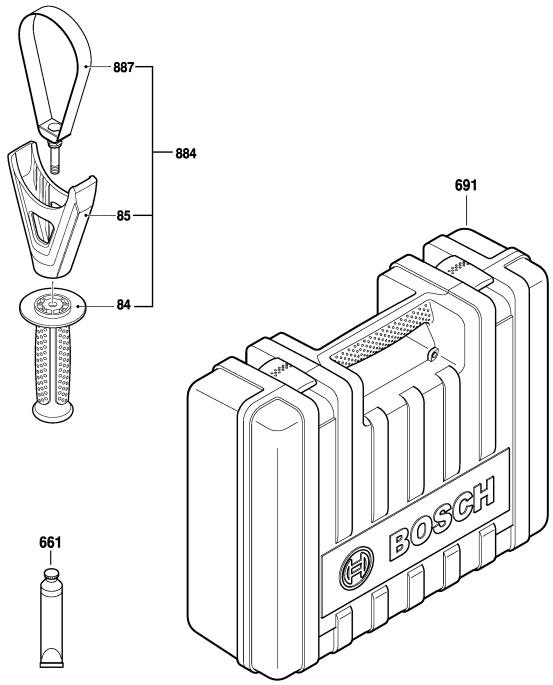

Änderungen vorbehalten
Modifications reserved
Modifications reservées
Salvo modificaciones

2 / 3

Model: 3 611 B65 0K0 = 230 | Date:

Item	Pc	Order no.	Description	LP IN INR
119	1	1 610 910 081	Needle-Roller Bearing .	454,00
120	1	1 610 190 080	Spacer Tube .	853,00
122	1	1 610 290 128	Spacer Ring .	162,00
125	16	1 613 435 040	Torx Oval-Head Screw .	46,00
126	1	2 603 490 023	Torx Oval-Head Screw	30,00
127	1	1 610 300 079	Bushing .	151,00
129	1	1 610 300 080	Bushing .	167,00
138	1	1 611 015 064	Sealing Frame .	285,00
142	1	1 610 290 112	Rotary shaft lip seal .	156,00
143	1	1 614 601 072	Retaining ring .	48,00
144	1	1 610 103 025	Supporting Disc .	180,00
151	1	1 610 210 222	O-Ring .	46,00
152	1	1 614 601 073	Retaining ring .	56,00
153	1	2 916 540 017	Retaining ring DIN 7993 A	30,00
154	1	2 916 660 027	Spring retaining ring DIN	154,00
155	2	1 614 601 074	Retaining ring .	61,00
157	1	1 610 210 103	O-Ring 33,0x2,0 MM .	109,00
158	1	1 610 210 224	O-Ring .	48,00
160	1	1 610 210 246	O-Ring .	101,00
161	1	1 610 210 227	Damping Ring .	491,00
162	2	1 600 210 080	O-Ring .	161,00
165	1	1 610 290 125	Seal Ring .	682,00
166	6	1 613 200 020	Cylindrical Roller .	106,00
167	1	1 610 290 12A	Rotary shaft lip seal .	139,00

Item	Pc	Order no.	Description	LP IN INR
168	1	1 610 206 027	Packing Washer .	56,00
171	4	1 613 414 026	Torx socket button screw .	48,00
172	4	1 613 435 041	Torx Oval-Head Screw .	55,00
175	4	2 603 490 021	Torx Oval-Head Screw	30,00
189	1	1 615 133 038	Handle .	1.138,00
190	1	1 615 500 438	Handle Cover .	595,00
192	1	1 614 611 028	Rocker Foot .	197,00
194	1	1 610 099 018	Screw Plate .	125,00
195	1	1 610 099 019	Screw Plate .	125,00
196	2	1 610 026 004	Damping rubber .	44,00
197	1	1 616 232 000	Leaf Spring .	441,00
204	1	1 615 102 162	Rear Housing Section .	827,00
206	1	1 612 386 006	Holding strip .	45,00
240	1	1 600 A00 0K3	Counterweight .	414,00
241	1	1 615 190 181	Guide Piece .	83,00
242	1	1 615 190 182	Guide Piece .	83,00
243	4	1 614 621 013	Compression Spring .	43,00
661	1	1 615 430 010	Grease Tube 30 ML .	116,00
691	1	1 615 438 51A	Carrying Case .	
801	1	1 610 102 096	Shim 0,45 MM .	58,00
802	1	1 610 102 095	Shim 0,30 MM .	45,00
803	1	1 614 010 267	Armature 230V .	7.546,00
810	1	1 617 014 145	Carbon-Brush Set .	711,00
820	1	1 618 597 102	Toolholder .	7.199,00

Please observe: Repairing, modifying and testing of electro-tools are to be performed professionally.The safety regulations according to IEC, EN, VDE, AFNOR and other regulations of the individual countries are to be observed. Subject to change.
This price list supersedes all previous edition. Prices are subjected to change without any prior notice.

3 611 B65 080
Issue Stand 17-03-29 **Fig./Abb. 2**

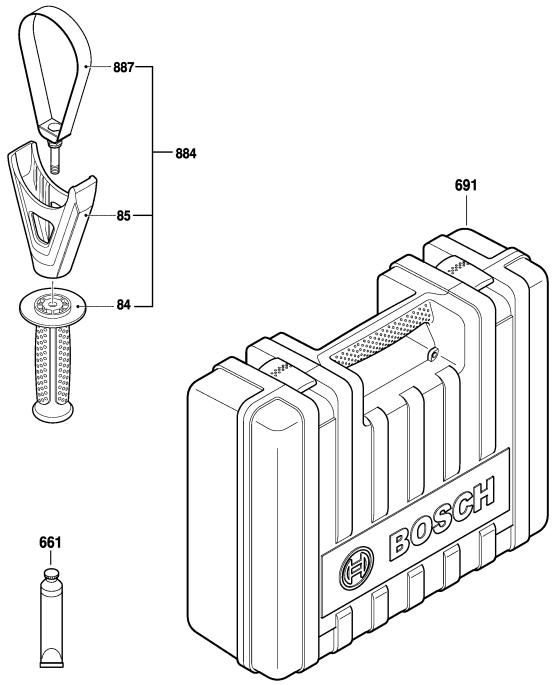

Änderungen vorbehalten
Modifications reserved
Modifications reservées
Salvo modificaciones

Model: 3 611 B65 0K0 = 230 | Date:

Item	Pc	Order no.	Description	LP IN INR	Item	Pc	Order no.	Description	LP IN INR
821	1	1 610 508 058	Plain bearing .	1.138,00					
840	1	1 617 000 A29	Impact Mechanism	10.162,00					
841	1	1 617 000 A4R	Striker Pin .	2.147,00					
849	1	1 617 000 A31	Control Fork .	974,00					
853	1	1 610 231 004	Guide Bushing .	1.589,00					
856	1	1 617 000 A32	Hammer Piston .	2.020,00					
857	1	1 617 000 A33	Striker .	1.424,00					
860	1	1 607 000 EL4	Spur Wheel Clutch .	8.768,00					
863	1	1 610 210 229	O-Ring .	92,00					
872	1	1 617 000 A35	Eccentric .	5.165,00					
873	1	1 617 000 A36	Housing Cover .	2.420,00					
884	1	1 612 025 004	Auxiliary Handle .	2.492,00					
887	1	1 617 000 807	Clamping Band Ø87 MM .	789,00					
891	1	1 612 099 005	Rocker Arm .	711,00					
895	1	1 613 120 024	Diaphragm .	1.567,00					
897	1	1 610 415 005	Bellows .	2.404,00					
898	1	1 610 415 004	Bellows .	2.424,00					
899	1	1 600 A00 4E6	Service package .	3.215,00					

Please observe: Repairing, modifying and testing of electro-tools are to be performed professionally.The safety regulations according to IEC, EN, VDE, AFNOR and other regulations of the individual countries are to be observed. Subject to change.
This price list supersedes all previous edition. Prices are subjected to change without any prior notice.

BOSCH Power Tools	Demolition Hammer	Model GSH 5 3 611 C37 0F0 | BO

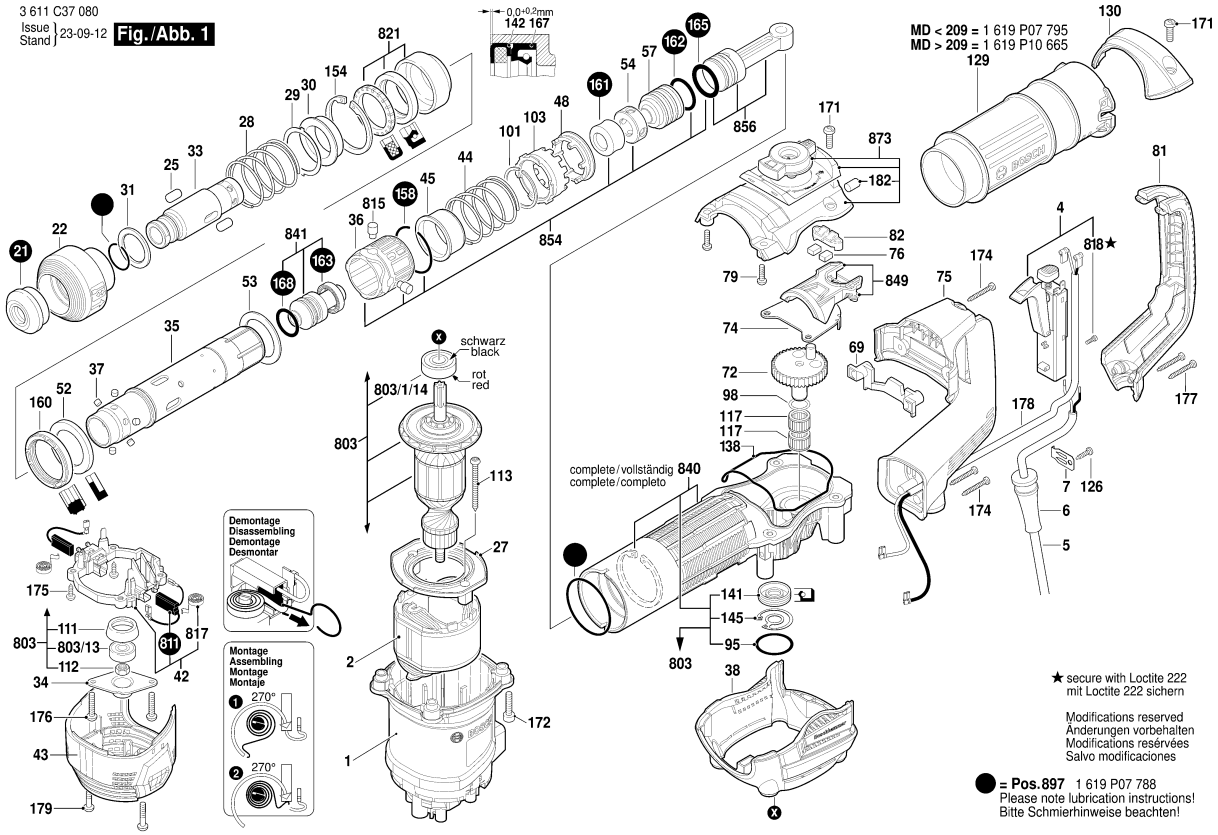

1 / 2

Model: 3 611 C37 0F0 = 230	Date:

Item	Pc	Order no.	Description	LP IN INR
1	1	1 619 P07 704	Motor Housing .	904,00
2	1	1 619 P05 379	Field 220-240V .	1.457,00
4	1	1 619 P07 720	Switch .	1.142,00
5	1	1 619 P15 735	Power supply cord 230V	1.021,00
6	1	1 619 P07 722	Grommet .	77,00
7	1	1 601 302 019	Fastening Clamp .	63,00
21	1	1 619 P07 829	Protective Cap .	140,00
22	1	1 619 P07 724	Protection Sleeve .	842,00
25	2	1 619 P07 742	Stopping Device .	304,00
27	1	1 619 P07 739	Air-Deflector Ring .	92,00
28	1	1 614 621 000	Compression Spring .	70,00
29	1	1 619 P10 522	Washer .	31,00
30	1	1 619 P07 715	Supporting Disc .	358,00
31	1	1 619 P07 743	Supporting Disc .	219,00
33	1	1 619 P07 748	Toolholder .	1.760,00
34	1	1 610 516 013	Flange .	63,00
35	1	1 619 P07 734	Hammer Pipe .	3.589,00
36	1	1 619 P07 702	Intermediate Sleeve .	125,00
37	6	1 619 P07 749	Cylindrical Roller .	59,00
38	1	1 619 P07 710	Covering hood BLUE	499,00
42	1	1 619 P07 754	Brush Holder .	570,00
43	1	1 619 P07 711	Fan Cover BLACK	453,00
45	1	1 619 P07 756	Control Bushing .	416,00
48	1	1 619 P07 780	Clutch Sleeve .	242,00

Item	Pc	Order no.	Description	LP IN INR
52	1	1 619 P07 738	Stop Sleeve .	233,00
53	1	1 619 P07 792	Supporting Disc .	59,00
54	1	1 610 231 001	Guide Bushing .	500,00
57	1	1 619 P07 762	Striker .	1.061,00
69	1	1 610 099 004	Retaining Bracket .	114,00
74	1	1 619 P07 772	Guide Plate .	94,00
75	1	1 619 P07 708	Handle .	579,00
76	2	1 619 P07 789	Magnet .	136,00
79	2	1 613 435 015	Torx Oval-Head Screw	52,00
81	1	1 619 P07 709	Handle Cover .	543,00
82	1	1 619 P07 786	Support bracket .	30,00
84	1	1 612 025 060	Auxiliary Handle M8	220,00
85	1	1 619 P07 774	Support clamp .	292,00
86	1	1 613 490 002	T-Head Bolt M8x40 MM .	73,00
87	1	1 619 P07 776	Clamping Band .	116,00
95	1	1 610 210 173	O-Ring 32,0x1,5 MM .	46,00
98	1	1 610 101 015	Shim ring 1,0 MM THICK	41,00
101	1	1 610 224 009	Retaining ring .	55,00
103	1	1 619 P07 781	Bushing .	423,00
104	1	1 619 P07 740	O-Ring .	111,00
105	4	1 619 P07 746	Driving Pin .	221,00
111	1	1 610 290 064	Bushing .	48,00
112	1	1 613 300 008	Hex Nut DIN 936-M8x1-8 .	47,00
113	2	1 613 435 009	Tapping Screw	50,00

Please observe: Repairing, modifying and testing of electro-tools are to be performed professionally.The safety regulations according to IEC, EN, VDE, AFNOR and other regulations of the individual countries are to be observed. Subject to change.
This price list supersedes all previous edition. Prices are subjected to change without any prior notice.

3 611 C37 080
Issue Stand 19-02-07 **Fig./Abb. 2**

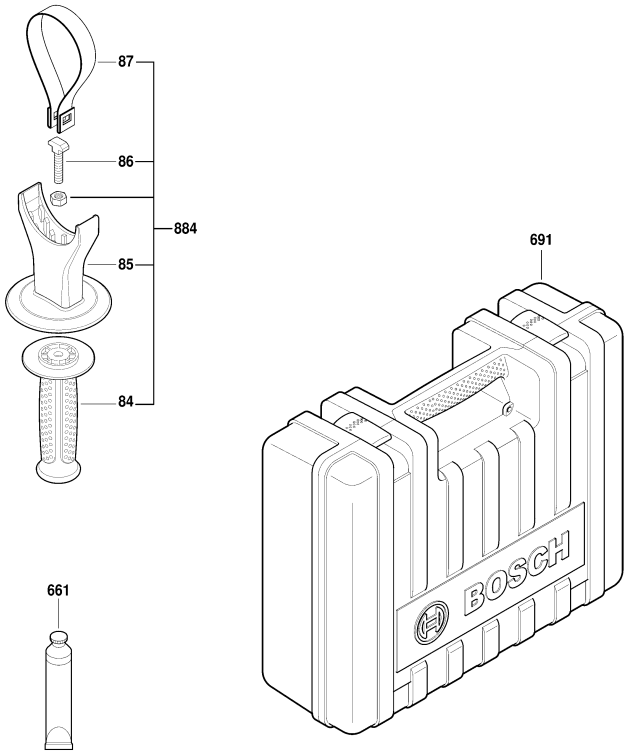

Änderungen vorbehalten
Modifications reserved
Modifications reservées
Salvo modificaciones

Model: 3 611 C37 0F0 = 230 | Date:

Item	Pc	Order no.	Description	LP IN INR
117	2	1 619 P07 713	Needle-Roller Assembly .	71,00
126	1	2 910 211 019	Tapping Screw DIN	31,00
129	1	1 619 P10 665	Holding Sleeve .	446,00
130	1	1 619 P07 796	Cover .	204,00
138	1	1 619 P07 797	Sealing Frame .	158,00
141	1	1 610 290 066	Rotary shaft lip seal .	249,00
143	1	1 614 601 021	Retaining ring DIN	56,00
145	1	1 610 119 012	Spring retaining ring .	50,00
154	1	1 619 P07 801	Clip .	205,00
158	1	1 619 P07 751	Retaining ring .	30,00
160	1	1 619 P07 806	Damping Ring .	270,00
161	1	1 610 290 093	Damping rubber .	55,00
162	1	1 610 210 091	O-Ring 24,0x4,0 MM .	102,00
163	1	1 610 290 065	Seal Ring .	179,00
165	1	1 610 210 153	O-Ring 25,0x4,0 MM .	81,00
168	1	1 610 210 144	O-Ring 22,0x3,0 MM .	48,00
171	4	1 619 P07 816	Torx Oval-Head Screw	35,00
172	4	1 613 435 013	Torx Oval-Head Screw	46,00
174	4	1 613 435 012	Torx Oval-Head Screw	46,00
175	4	1 619 P00 228	Screw .	107,00
176	2	1 613 435 012	Torx Oval-Head Screw	46,00
177	2	2 603 490 024	Torx Oval-Head Screw	48,00
178	1	1 600 A00 ZS0	Connecting Cable .	221,00
179	2	1 619 P07 815	Screw .	35,00

Item	Pc	Order no.	Description	LP IN INR
182	1	1 619 P09 862	Felt Seal .	36,00
661	1	1 615 430 010	Grease Tube 30 ML .	116,00
691	1	1 605 438 1D1	Carrying Case .	
803	1	1 619 P07 761	Armature 220-240V .	4.346,00
803/13	1	1 610 900 026	groove ball bearing 8x24x8	213,00
803/1/14	1	1 610 905 041	groove ball bearing	224,00
811	1	1 617 014 138	Carbon-Brush Set .	356,00
815	1	1 619 P18 732	Driving Pin .	
817	2	1 614 652 004	Spiral Spring .	285,00
818	2	2 910 011 082	Socket head cap screw	72,00
821	1	1 619 P07 768	Bushing .	1.004,00
840	1	1 619 P10 667	Impact Mechanism	5.797,00
841	1	1 619 P07 839	Striker .	1.117,00
849	1	1 619 P07 798	Control Fork .	170,00
854	1	1 619 P07 773	Guide Bushing .	733,00
856	1	1 619 P07 775	Hammer Piston .	760,00
873	1	1 619 P07 799	Housing Cover .	1.236,00
884	1	1 619 P07 778	Auxiliary Handle .	911,00
897	1	1 619 P07 788	Wear and Tear Part Set .	1.378,00

Please observe: Repairing, modifying and testing of electro-tools are to be performed professionally.The safety regulations according to IEC, EN, VDE, AFNOR and other regulations of the individual countries are to be observed. Subject to change.
This price list supersedes all previous edition. Prices are subjected to change without any prior notice.

BOSCH Power Tools	Demolition Hammer	Model GSH 500 3 611 C38 6F0 | BO

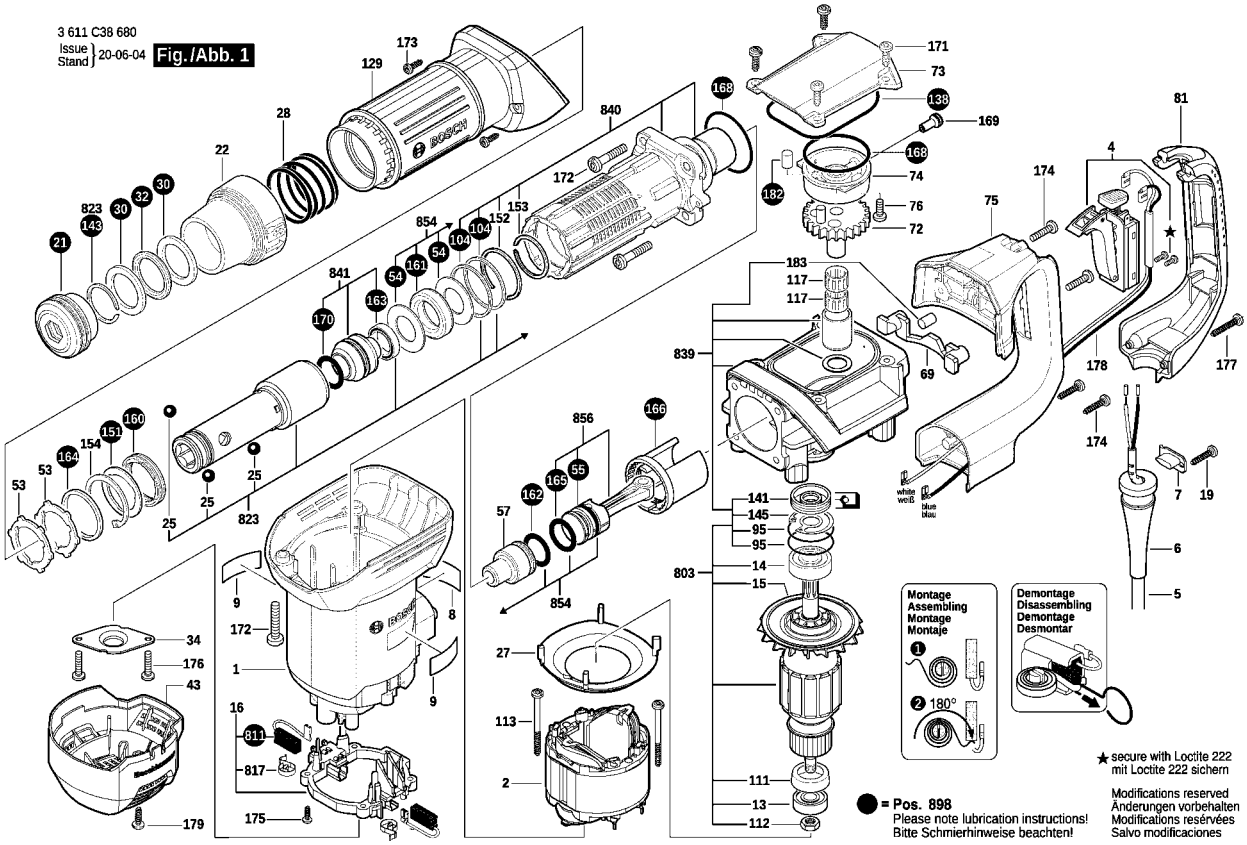

Model: 3 611 C38 6F0 = 220 | Date:

Item	Pc	Order no.	Description	LP in INR
1	1	1 619 P10 301	Motor Housing .	661,00
2	1	1 619 P14 777	Field 220V .	1.155,00
4	1	1 619 P08 754	Switch .	474,00
5	1	1 619 P15 735	Power supply cord 230V	1.021,00
6	1	1 610 703 053	Grommet Ø9,7-Ø12x89	65,00
7	1	1 601 302 019	Fastening Clamp .	63,00
8	1	1 619 P15 116	Nameplate .	
9	2	1 619 P13 299	Manufacturer's nameplate	
13	1	1 610 900 026	groove ball bearing 8x24x8	213,00
14	1	1 610 905 041	groove ball bearing	224,00
15	1	1 616 610 085	Fan .	139,00
16	1	1 619 P14 465	Brush Holder .	636,00
19	1	2 910 211 019	Tapping Screw DIN	31,00
21	1	1 619 P14 480	Dust Cap .	142,00
22	1	1 619 P08 758	Protection Sleeve .	396,00
25	3	1 903 230 016	Ball 10 MM III DIN 5401ST	120,00
27	1	1 619 P09 017	Air-Deflector Ring .	65,00
28	1	1 619 P08 759	Compression Spring .	56,00
30	2	1 619 P08 760	Supporting Disc .	56,00
32	1	1 619 P08 761	Damping Ring .	36,00
34	1	1 610 516 013	Flange .	63,00
43	1	1 619 P08 767	Fan Cover .	277,00
53	2	1 619 P14 688	Washer .	65,00
54	1	1 619 P08 769	Stop Disc .	41,00

Item	Pc	Order no.	Description	LP in INR
55	1	1 610 290 067	Retaining snap ring .	
57	1	1 619 P14 474	Striker .	165,00
69	1	1 610 099 004	Retaining Bracket .	114,00
72	1	1 619 P14 477	Eccentric Cog Wheel .	602,00
73	1	1 619 P14 241	Housing Cover .	296,00
74	1	1 619 P14 481	Holding-Down-Appliance .	70,00
75	1	1 619 P08 778	Handle .	376,00
76	1	1 613 435 015	Torx Oval-Head Screw	52,00
81	1	1 619 P08 780	Handle Cover .	179,00
84	1	1 612 025 060	Auxiliary Handle M8	220,00
85	1	1 618 040 074	Support clamp .	155,00
86	1	1 613 490 002	T-Head Bolt M8x40 MM .	73,00
87	1	1 611 316 019	Clamping Band Ø62 MM .	119,00
95	2	1 610 210 173	O-Ring 32,0x1,5 MM .	46,00
104	2	1 619 P08 783	Seal Ring .	56,00
111	1	1 610 290 064	Bushing .	48,00
112	1	1 613 300 008	Hex Nut DIN 936-M8x1-8 .	47,00
113	2	1 613 435 009	Tapping Screw	50,00
117	2	1 610 913 004	Needle-Roller Assembly	83,00
129	1	1 619 P10 302	Cover Sleeve .	276,00
138	1	1 619 P08 785	Sealing Frame .	56,00
141	1	1 610 290 066	Rotary shaft lip seal .	249,00
143	1	1 619 P08 752	Retainer .	56,00
145	1	1 610 119 012	Spring retaining ring .	50,00

Please observe: Repairing, modifying and testing of electro-tools are to be performed professionally.The safety regulations according to IEC, EN, VDE, AFNOR and other regulations of the individual countries are to be observed. Subject to change.
This price list supersedes all previous edition. Prices are subjected to change without any prior notice.

3 611 C38 680
Issue / Stand 19-12-11 **Fig./Abb. 2**

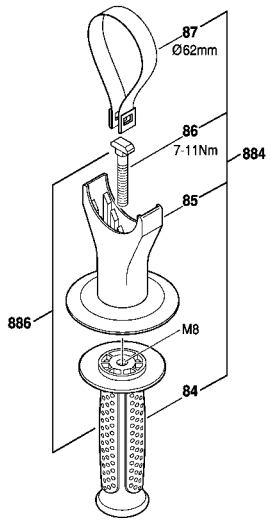

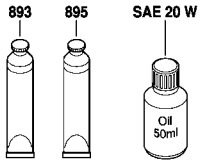

Modifications reserved
Änderungen vorbehalten
Modifications resérvées
Salvo modificaciones

Model: 3 611 C38 6F0 = 220 | Date:

Item	Pc	Order no.	Description	LP in INR
151	1	1 619 P14 464	Stop Disc .	70,00
152	1	1 619 P14 463	Retaining ring .	65,00
153	1	1 614 601 030	Retaining ring .	69,00
154	1	2 916 660 019	Spring retaining ring DIN	77,00
160	1	1 619 P08 787	Damping Ring .	33,00
161	1	1 619 P14 753	Damping Ring .	47,00
162	1	1 610 210 163	O-Ring 22,0x3,5 MM .	68,00
163	1	1 610 290 125	Seal Ring .	682,00
164	1	1 619 P14 689	Damping Ring .	30,00
165	1	1 610 210 079	O-Ring 22,0x4,0 MM .	86,00
166	1	1 619 P14 462	Sealing Ring .	47,00
168	2	1 619 P08 792	O-Ring .	36,00
169	1	1 619 P14 461	Rubber Plug .	30,00
170	1	1 619 P14 472	O-Ring .	47,00
171	4	1 613 435 014	Torx Oval-Head Screw	48,00
172	8	1 613 435 013	Torx Oval-Head Screw	46,00
173	2	1 619 P01 380	Screw 4x14 .	28,00
174	4	1 613 435 012	Torx Oval-Head Screw	46,00
175	4	1 619 P00 228	Screw .	107,00
176	2	1 613 435 012	Torx Oval-Head Screw	46,00
177	2	1 603 435 051	Tapping Screw ST3,9x32	45,00
178	1	1 619 P10 286	Connecting Cable .	184,00
179	2	1 619 P07 815	Screw .	35,00
182	1	1 619 P00 831	Felt Seal .	30,00

Item	Pc	Order no.	Description	LP in INR
183	1	1 619 P09 862	Felt Seal .	36,00
803	1	1 619 P15 112	Armature 220V .	2.628,00
811	1	1 617 014 138	Carbon-Brush Set .	356,00
817	2	1 614 652 004	Spiral Spring .	285,00
823	1	1 619 P14 923	Toolholder .	1.508,00
839	1	1 619 P14 924	Gear Housing .	1.272,00
840	1	1 619 P14 926	Impact Mechanism	1.544,00
841	1	1 619 P14 928	Striker Pin .	719,00
854	1	1 619 P14 929	Stop Disc .	271,00
856	1	1 619 P14 930	Hammer Piston .	377,00
884	1	1 619 P14 935	Auxiliary Handle .	377,00
886	1	1 617 000 459	Auxiliary Handle M8	418,00
893	1	1 615 430 002	Grease Tube 225 ML .	2.780,00
895	1	1 615 430 015	Grease Tube 225 ML .	1.043,00
898	1	1 619 P14 932	Wear and Tear Part Set .	1.989,00

Please observe: Repairing, modifying and testing of electro-tools are to be performed professionally.The safety regulations according to IEC, EN, VDE, AFNOR and other regulations of the individual countries are to be observed. Subject to change.
This price list supersedes all previous edition. Prices are subjected to change without any prior notice.

BOSCH Power Tools	Demolition Hammer	Model GSH 500 3 611 C38 7F0 | BO

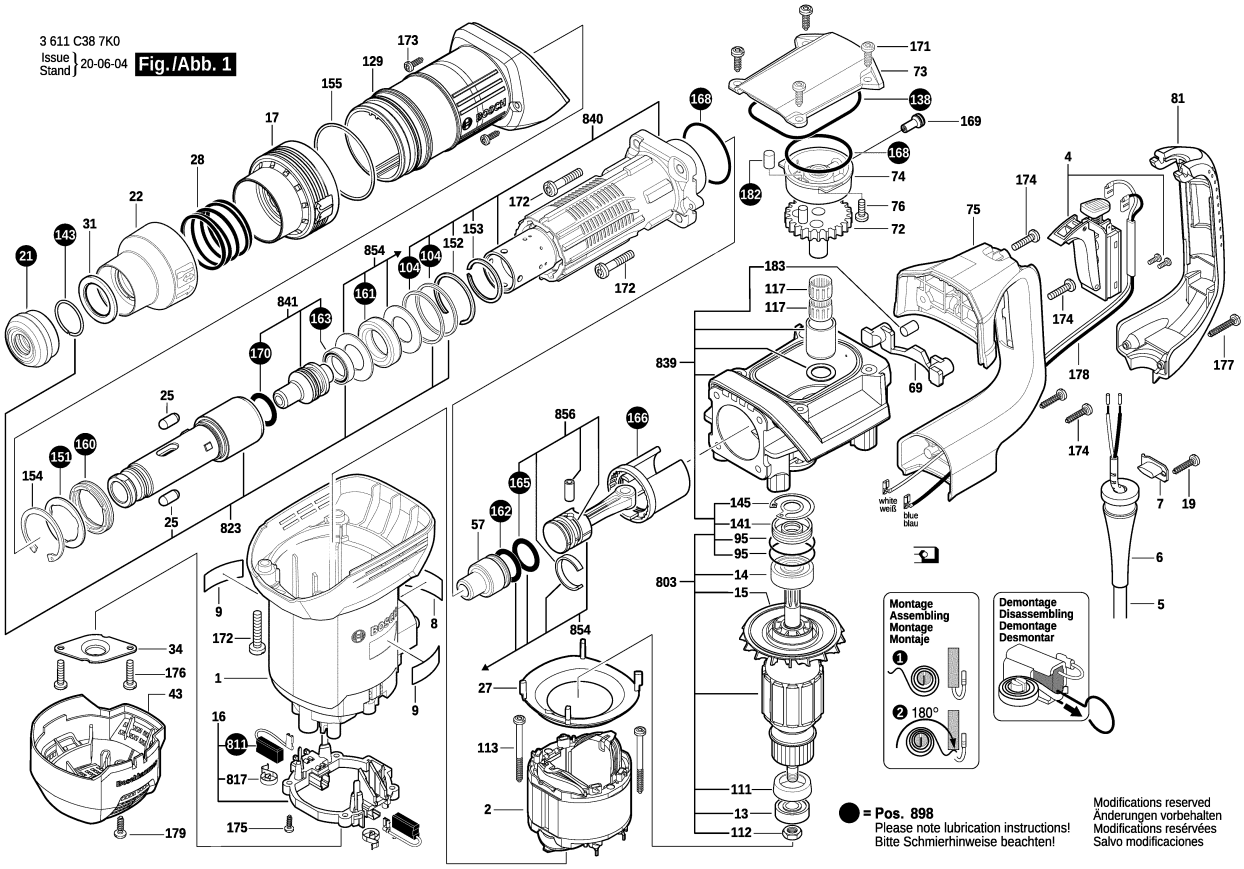

Model: 3 611 C38 7F0 = 230 | Date:

Item	Pc	Order no.	Description	LP IN INR
1	1	1 619 P10 301	Motor Housing .	661,00
2	1	1 619 P14 777	Field 220V .	1.155,00
4	1	1 619 P08 754	Switch .	474,00
5	1	1 604 460 7AA	Power supply cord .	
5	1	1 619 P15 735	Power supply cord 230V	1.021,00
6	1	1 610 703 053	Grommet Ø9,7-Ø12x89	65,00
7	1	1 601 302 019	Fastening Clamp .	63,00
8	1	1 619 P15 620	Nameplate .	
9	2	1 619 P13 299	Manufacturer's nameplate	
13	1	1 610 900 026	groove ball bearing 8x24x8	213,00
14	1	1 610 905 041	groove ball bearing	224,00
15	1	1 616 610 085	Fan .	139,00
16	1	1 619 P14 465	Brush Holder .	636,00
17	1	1 619 P15 392	Ratchet Sleeve .	424,00
19	1	2 910 211 019	Tapping Screw DIN	31,00
21	1	1 610 508 038	Protective Cap .	99,00
22	1	1 619 P15 321	Protection Sleeve .	396,00
25	2	1 612 300 034	Stopping Device .	79,00
27	1	1 619 P09 017	Air-Deflector Ring .	65,00
28	1	1 619 P15 323	Compression Spring .	56,00
31	1	1 610 251 006	Supporting Disc .	156,00
34	1	1 610 516 013	Flange .	63,00
43	1	1 619 P08 767	Fan Cover .	277,00
57	1	1 619 P17 992	Striker .	

Item	Pc	Order no.	Description	LP IN INR
69	1	1 610 099 004	Retaining Bracket .	114,00
72	1	1 619 P14 477	Eccentric Cog Wheel .	602,00
73	1	1 619 P14 241	Housing Cover .	296,00
74	1	1 619 P14 481	Holding-Down-Appliance .	70,00
75	1	1 619 P08 778	Handle .	376,00
76	1	1 613 435 015	Torx Oval-Head Screw	52,00
81	1	1 619 P08 780	Handle Cover .	179,00
84	1	1 612 025 060	Auxiliary Handle M8	220,00
86	1	1 613 490 002	T-Head Bolt M8x40 MM .	73,00
87	1	1 611 316 019	Clamping Band Ø62 MM .	119,00
95	2	1 610 210 173	O-Ring 32,0x1,5 MM .	46,00
104	2	1 619 P08 783	Seal Ring .	56,00
111	1	1 610 290 064	Bushing .	48,00
112	1	1 613 300 008	Hex Nut DIN 936-M8x1-8 .	47,00
113	2	1 613 435 009	Tapping Screw	50,00
117	2	1 619 P07 713	Needle-Roller Assembly .	71,00
129	1	1 619 P15 396	Cover Sleeve .	276,00
138	1	1 619 P08 785	Sealing Frame .	56,00
141	1	1 610 290 066	Rotary shaft lip seal .	249,00
143	1	1 614 601 021	Retaining ring DIN	56,00
145	1	1 610 119 012	Spring retaining ring .	50,00
151	1	1 619 P14 464	Stop Disc .	70,00
152	1	1 619 P14 463	Retaining ring .	65,00
153	1	1 614 601 030	Retaining ring .	69,00

Please observe: Repairing, modifying and testing of electro-tools are to be performed professionally.The safety regulations according to IEC, EN, VDE, AFNOR and other regulations of the individual countries are to be observed. Subject to change.
This price list supersedes all previous edition. Prices are subjected to change without any prior notice.

3 611 C38 7K0
Issue / Stand 19-11-14 **Fig./Abb. 2**

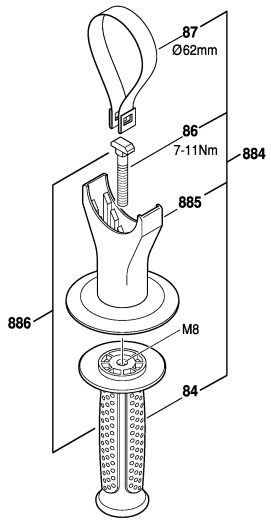

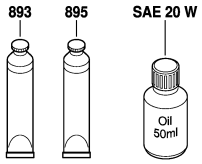

Modifications reserved
Änderungen vorbehalten
Modifications resérvées
Salvo modificaciones

Model: 3 611 C38 7F0 = 230 | Date:

Item	Pc	Order no.	Description	LP IN INR
154	1	2 916 660 019	Spring retaining ring DIN	77,00
155	1	1 619 P15 397	Retaining ring .	56,00
160	1	1 619 P08 787	Damping Ring .	33,00
161	1	1 619 P14 753	Damping Ring .	47,00
162	1	1 610 210 163	O-Ring 22,0x3,5 MM .	68,00
163	1	1 610 290 065	Seal Ring .	179,00
165	1	1 610 210 079	O-Ring 22,0x4,0 MM .	86,00
166	1	1 619 P14 462	Sealing Ring .	47,00
168	2	1 619 P08 792	O-Ring .	36,00
169	1	1 619 P14 461	Rubber Plug .	30,00
170	1	1 610 210 144	O-Ring 22,0x3,0 MM .	48,00
171	4	1 613 435 014	Torx Oval-Head Screw	48,00
172	8	1 613 435 013	Torx Oval-Head Screw	46,00
173	2	1 619 P01 380	Screw 4x14 .	28,00
174	4	1 613 435 012	Torx Oval-Head Screw	46,00
175	4	1 619 P00 228	Screw .	107,00
176	2	1 613 435 012	Torx Oval-Head Screw	46,00
177	2	1 603 435 051	Tapping Screw ST3,9x32	45,00
178	1	1 619 P15 164	Connecting Cable .	179,00
179	2	1 619 P07 815	Screw .	35,00
182	1	1 619 P09 862	Felt Seal .	36,00
183	1	1 619 P09 862	Felt Seal .	36,00
803	1	1 619 P15 112	Armature 220V .	2.628,00
811	1	1 617 014 138	Carbon-Brush Set .	356,00

Item	Pc	Order no.	Description	LP IN INR
817	2	1 614 652 004	Spiral Spring .	285,00
823	1	1 619 P15 816	Toolholder .	1.508,00
839	1	1 619 P14 924	Gear Housing .	1.272,00
840	1	1 619 P15 817	Impact Mechanism	2.753,00
841	1	1 619 P15 818	Striker Pin .	801,00
854	1	1 619 P14 929	Stop Disc .	271,00
856	1	1 619 P14 930	Hammer Piston .	377,00
884	1	1 619 P14 935	Auxiliary Handle .	377,00
885	1	1 618 040 074	Support clamp .	155,00
886	1	1 617 000 459	Auxiliary Handle M8	418,00
893	1	1 615 430 002	Grease Tube 225 ML .	2.780,00
895	1	1 615 430 015	Grease Tube 225 ML .	1.043,00
898	1	1 619 P15 819	Wear and Tear Part Set .	2.071,00

Please observe: Repairing, modifying and testing of electro-tools are to be performed professionally.The safety regulations according to IEC, EN, VDE, AFNOR and other regulations of the individual countries are to be observed. Subject to change.
This price list supersedes all previous edition. Prices are subjected to change without any prior notice.

BOSCH Power Tools	Demolition Hammer	Model GSH 11 E 3 611 C16 8F0 | BO

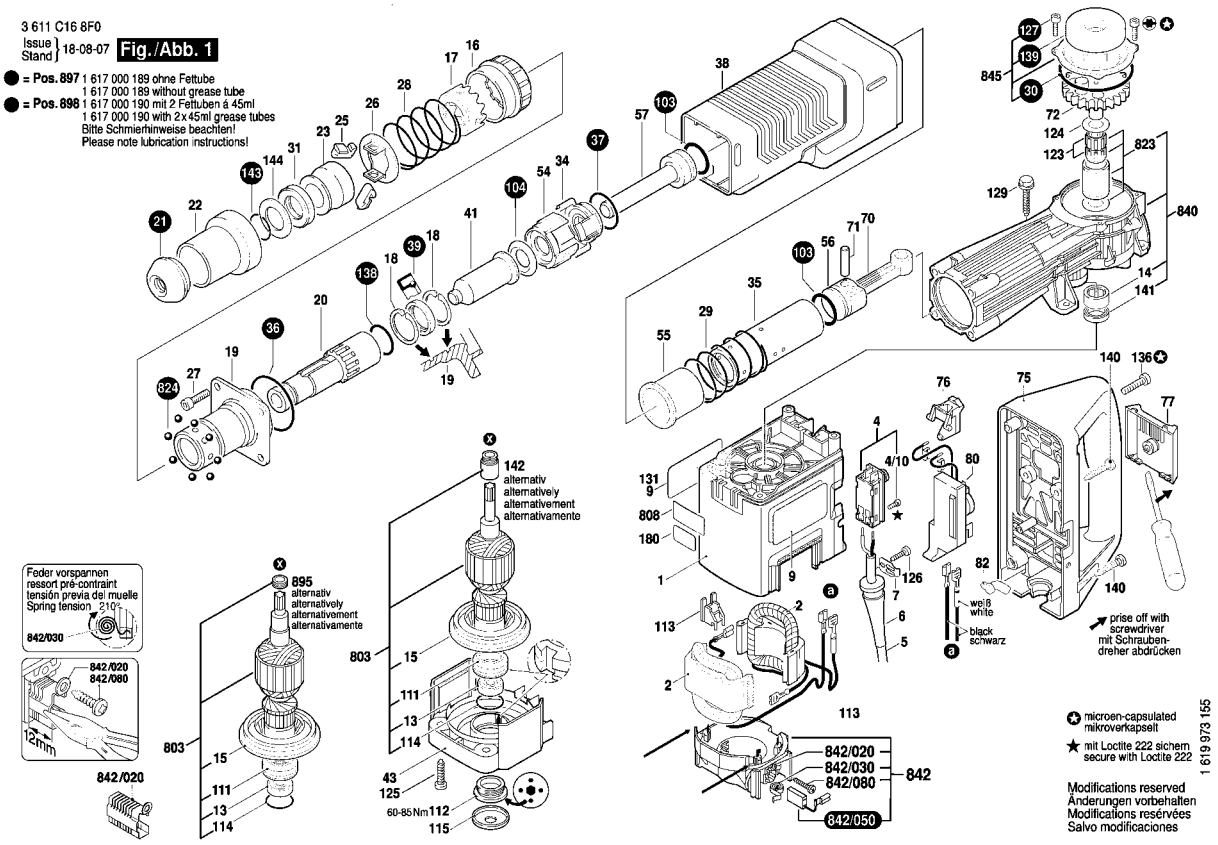

1 / 2

Model: 3 611 C16 8F0 = 220	Date:

Item	Pc	Order no.	Description	LP in INR
1	1	1 615 108 091	Motor Housing BLUE	1.241,00
2	1	1 619 P12 250	Field .	2.732,00
4	1	1 617 200 048	Switch .	565,00
4/10	1	2 910 011 088	Socket head cap screw	30,00
5	1	1 619 P15 856	Power supply cord .	
6	1	1 610 703 053	Grommet Ø9,7-Ø12x89	65,00
7	1	1 601 302 019	Fastening Clamp .	63,00
9	1	1 619 P15 073	Manufacturer's nameplate .	
13	1	2 610 909 310	groove ball bearing .	427,00
14	1	1 610 910 096	Needle-Roller Bearing .	679,00
15	1	1 616 610 083	Fan .	619,00
16	1	1 610 499 022	Ratchet Sleeve .	85,00
17	1	1 610 590 004	Retaining snap ring .	389,00
18	2	1 610 119 010	Spring retaining ring .	99,00
19	1	1 619 P13 963	Clamping-Flange .	3.249,00
20	1	1 619 P13 964	Toolholder .	3.721,00
21	1	1 610 508 025	Protective Cap .	126,00
22	1	1 610 499 023	Protection Sleeve .	130,00
23	1	1 610 521 011	Stop Sleeve .	581,00
25	2	1 612 300 025	Stopping Device .	372,00
26	1	1 619 P16 141	Indexing Disk .	132,00
27	4	2 910 151 246	Hex Socket Head Cap	30,00
28	1	1 614 621 002	Compression Spring .	73,00
29	1	1 614 621 003	Compression Spring .	77,00

Item	Pc	Order no.	Description	LP in INR
30	1	1 610 210 147	O-Ring 79,5x2,65 MM .	30,00
31	1	1 610 290 026	Damping Ring .	83,00
34	1	1 610 390 029	Spacer Tube .	383,00
35	1	1 619 P13 967	Hammer Pipe .	3.122,00
36	1	1 610 210 127	O-Ring 64,0x2,5 MM .	49,00
37	1	1 610 210 128	O-Ring 35,0x3,0 MM .	49,00
38	1	1 615 190 093	Covering hood .	778,00
39	1	1 610 283 030	Rotary shaft lip seal DIN	219,00
41	1	1 618 710 071	Striker Pin .	565,00
43	1	1 615 808 083	Bearing cover BLUE	495,00
54	1	1 610 190 019	Control Disc .	96,00
55	1	1 610 420 005	Control Bushing .	445,00
56	1	1 618 700 064	Hammer Piston .	146,00
57	1	1 618 710 062	Striker .	1.188,00
70	1	1 612 001 033	Connecting Rod .	211,00
71	1	1 613 101 006	Straight Pin .	70,00
72	1	1 600 A02 7H7	Eccentric Cog Wheel .	2.616,00
75	1	1 615 132 082	Handle BLACK	1.765,00
76	1	1 612 026 049	Control Lever .	63,00
77	1	1 612 026 048	Shift Plate GRAY	184,00
80	1	1 607 233 5CV	Speed governor 220-240V .	1.335,00
82	1	1 615 510 000	Light Conductor .	30,00
84	1	1 602 025 08D	Auxiliary Handle .	2.117,00
86	1	2 911 021 267	Hex Screw .	47,00

Please observe: Repairing, modifying and testing of electro-tools are to be performed professionally.The safety regulations according to IEC, EN, VDE, AFNOR and other regulations of the individual countries are to be observed. Subject to change.
This price list supersedes all previous edition. Prices are subjected to change without any prior notice.

3 611 C16 8F0
Issue Stand 18-08-08 **Fig./Abb. 2**

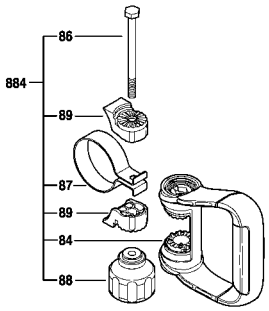

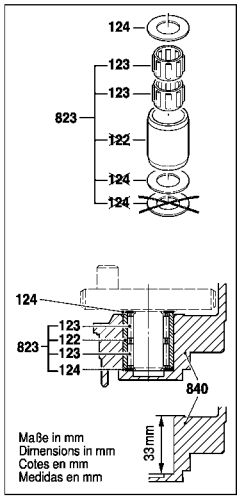

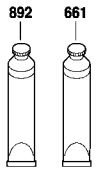

Änderungen vorbehalten
Modifications reserved
Modifications reservées
Salvo modificaciones

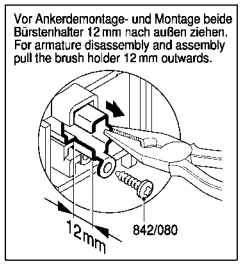

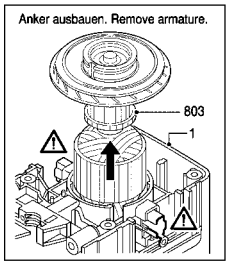

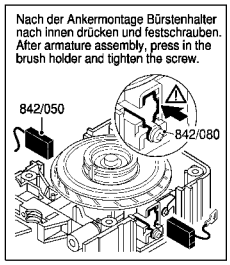

Model: 3 611 C16 8F0 = 220 | Date:

Item	Pc	Order no.	Description	LP in INR
87	1	1 611 316 010	Clamping Band .	122,00
88	1	1 619 P16 922	Star Knob .	283,00
89	2	1 600 A00 748	Clamping Piece .	38,00
103	2	1 610 210 122	O-Ring 30,0x5,0 MM .	114,00
104	1	1 610 210 123	O-Ring 22,0x11,0 MM .	83,00
111	1	3 610 501 500	Bushing .	647,00
112	1	3 613 461 500	Threaded Ring .	154,00
113	2	1 610 009 007	Spacer .	48,00
114	1	1 610 210 139	O-Ring 30,0x2,5 MM .	46,00
115	1	1 610 508 027	Protective Cap BLACK	30,00
123	2	1 610 913 013	Needle-Roller Assembly .	158,00
124	1	1 610 101 608	Thrust Bearing Disc .	48,00
125	4	1 613 435 010	Torx Oval-Head Screw	46,00
126	1	2 603 490 022	Screw 4x16 .	30,00
127	4	2 914 551 117	Microencapsulated Screw	48,00
129	4	1 613 433 001	Screw and washer	30,00
131	1	1 619 P15 106	Manufacturer's nameplate	
136	2	1 613 490 029	Torx Oval-Head Screw	31,00
138	1	1 610 210 130	O-Ring 32,0x2,5 MM .	113,00
139	1	1 610 108 020	Felt Washer .	258,00
140	4	1 613 435 010	Torx Oval-Head Screw	46,00
141	1	1 610 290 028	Rotary shaft lip seal .	80,00
142	1	1 610 300 063	Bushing .	353,00
143	1	2 916 540 017	Retaining ring DIN 7993 A	30,00

Item	Pc	Order no.	Description	LP in INR
144	1	1 610 102 029	Supporting Disc .	102,00
180	1	1 611 110 855	Sticker .	
661	1	1 615 430 010	Grease Tube 30 ML .	116,00
803	1	1 619 P15 184	Armature 220-240V .	5.712,00
808	1	1 619 P14 242	Nameplate .	
823	1	1 617 000 403	Needle-Roller Assembly .	955,00
824	1	1 617 000 240	Ball DIN 5401-6,5MM-III-ST	141,00
840	1	1 617 000 969	Impact Mechanism	6.762,00
842	1	1 600 A00 5AF	Brush Holder .	1.545,00
842/020	2	1 614 336 017	Brush Guide .	190,00
842/030	2	1 614 652 004	Spiral Spring .	285,00
842/050	1	1 617 014 126	Carbon-Brush Set .	349,00
842/050	1	1 607 000 481	Carbon-Brush Set 10 x 1	3.484,00
842/080	2	2 910 611 012	Tapping Screw DIN	30,00
845	1	1 617 000 418	Housing Cover .	364,00
884	1	1 602 025 08E	Auxiliary Handle .	2.399,00
892	1	1 615 430 014	Grease Tube 45 ML .	193,00
895	1	3 613 344 500	Oil Return Ring .	565,00
897	1	1 617 000 189	Wear and Tear Part Set .	1.396,00
898	1	1 617 000 190	Wear and Tear Part Set .	1.914,00

Please observe: Repairing, modifying and testing of electro-tools are to be performed professionally.The safety regulations according to IEC, EN, VDE, AFNOR and other regulations of the individual countries are to be observed. Subject to change.
This price list supersedes all previous edition. Prices are subjected to change without any prior notice.

BOSCH Power Tools	Demolition Hammer	Model GSH 11 VC 3 611 C36 0K0 | BO

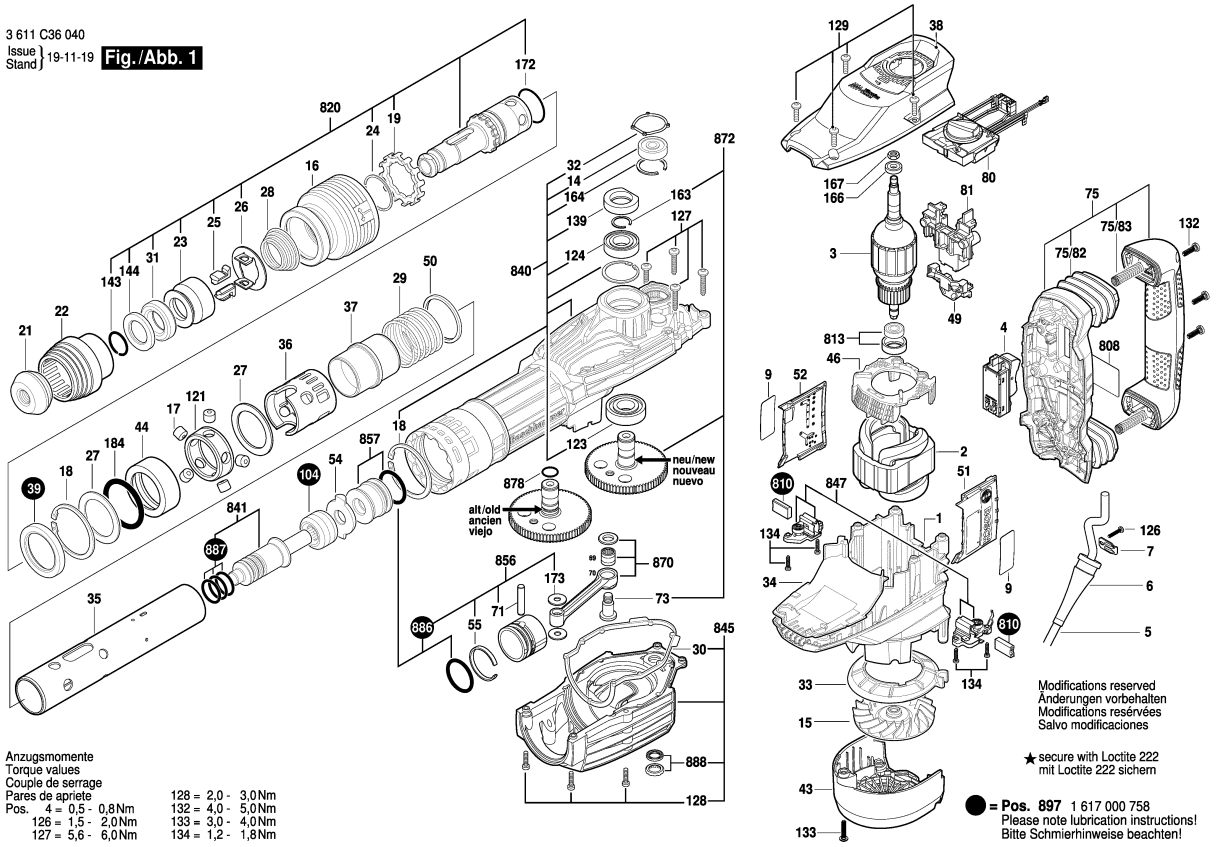

Model: 3 611 C36 0K0 = 220 | Date:

Item	Pc	Order no.	Description	LP IN INR
1	1	1 615 108 157	Motor Housing .	1.830,00
2	1	1 604 220 52F	Field 230V .	4.302,00
3	1	1 614 011 120	Armature 230V .	8.703,00
4	1	1 607 200 244	Switch .	1.068,00
5	1	1 614 460 098	Power supply cord .	
6	1	1 610 703 053	Grommet Ø9,7-Ø12x89	65,00
7	1	1 601 302 018	Fastening Clamp .	51,00
9	1	1 601 11C 0U4	Manufacturer's nameplate .	
14	1	1 600 905 028	groove ball bearing .	228,00
15	1	1 616 610 106	Fan .	672,00
16	1	1 610 499 076	Guide Sleeve .	762,00
17	5	1 613 103 012	Locking Bolt .	93,00
18	2	1 610 224 011	Spring retaining ring .	89,00
19	1	1 616 490 071	Carrier .	305,00
21	1	1 610 508 025	Protective Cap .	126,00
22	1	1 610 499 078	Protection Sleeve .	169,00
23	1	1 610 520 005	Stop Sleeve .	628,00
24	1	1 614 601 020	Retaining ring .	52,00
25	2	1 612 300 025	Stopping Device .	372,00
26	1	1 610 290 105	Indexing Disk .	93,00
27	2	1 610 101 024	Stop Disc .	92,00
28	1	1 614 621 014	Conical helical spring .	93,00
29	1	1 614 621 015	Compression Spring .	163,00
30	1	1 611 015 063	Sealing Frame .	231,00

Item	Pc	Order no.	Description	LP IN INR
31	1	1 610 290 106	Damping Ring .	82,00
32	1	1 610 210 214	Sealing Frame .	62,00
33	1	1 610 591 047	Air-Deflector Ring .	172,00
34	1	1 610 591 048	Air Path .	93,00
35	1	1 615 806 243	Hammer Pipe .	6.798,00
36	1	1 610 190 066	Perforated Ring .	169,00
37	1	1 610 420 006	Control Bushing .	1.380,00
38	1	1 615 190 173	Covering hood .	828,00
39	1	1 610 283 052	Rotary shaft lip seal .	328,00
43	1	1 615 500 426	Brush-Cover .	628,00
44	1	1 610 322 017	Guide Sleeve .	982,00
46	1	1 615 500 427	Holding-Down-Appliance .	171,00
49	1	1 604 477 020	Plug Holder .	82,00
50	1	1 610 206 028	Stop Ring .	163,00
51	1	1 615 500 424	Housing Cover .	169,00
52	1	1 615 500 425	Housing Cover .	169,00
54	1	1 610 190 069	Control Disc .	1.048,00
55	1	1 610 500 024	Retaining snap ring .	49,00
71	1	1 613 101 014	Straight Pin .	105,00
73	1	1 610 320 015	Eccentric Bolt .	428,00
75	1	1 615 132 132	Handle .	3.050,00
75/82	2	1 610 415 003	Bellows .	817,00
75/83	2	1 614 621 009	Compression Spring .	347,00
80	1	1 617 233 052	Speed governor .	3.354,00

Please observe: Repairing, modifying and testing of electro-tools are to be performed professionally.The safety regulations according to IEC, EN, VDE, AFNOR and other regulations of the individual countries are to be observed. Subject to change.
This price list supersedes all previous edition. Prices are subjected to change without any prior notice.

3 611 C36 040
Issue / Stand 17-03-29 **Fig./Abb. 2**

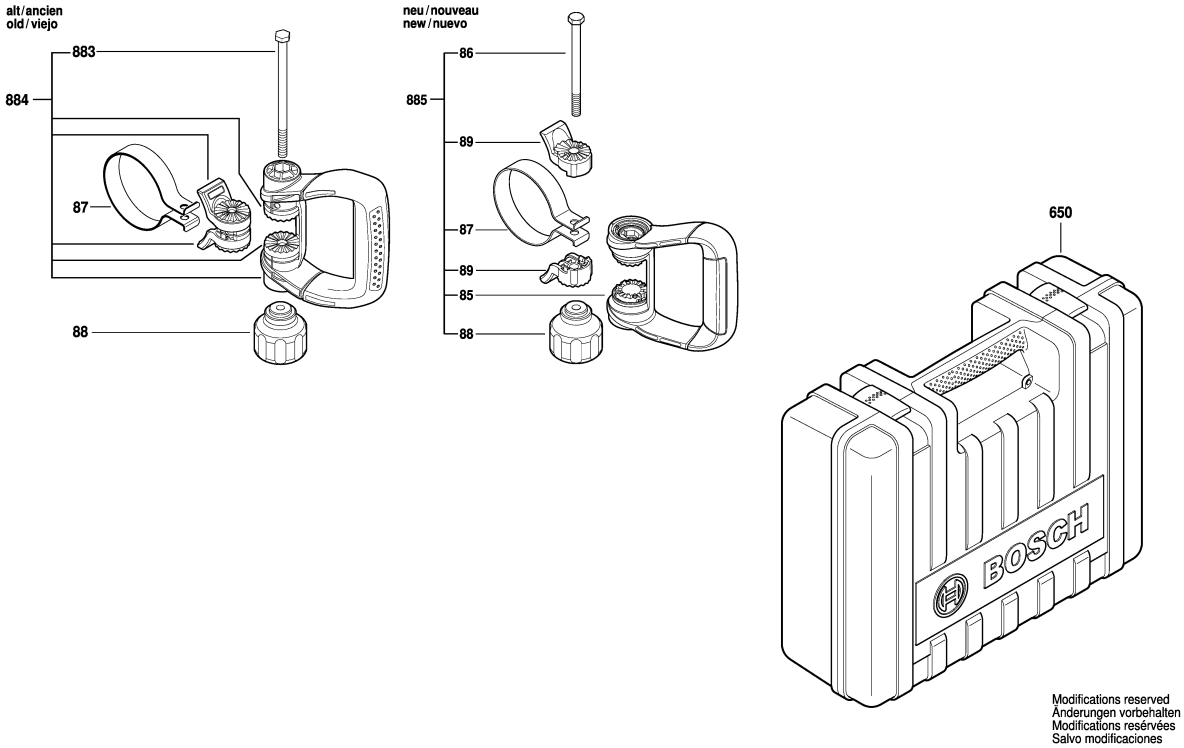

Modifications reserved
Änderungen vorbehalten
Modifications reservées
Salvo modificaciones

Model: 3 611 C36 0K0 = 220 | Date:

Item	Pc	Order no.	Description	LP IN INR
81	1	1 611 038 018	Inserted Part .	169,00
85	1	1 602 025 081	Auxiliary Handle .	2.495,00
86	1	2 911 021 267	Hex Screw .	47,00
87	1	1 600 A01 BH0	Clamping Band .	264,00
88	1	1 619 P16 922	Star Knob .	283,00
89	2	1 600 A00 8BL	Clamping Piece .	44,00
104	1	1 610 210 219	Damper .	1.706,00
121	1	1 610 200 032	Retaining snap ring .	1.146,00
123	1	1 610 900 033	groove ball bearing	762,00
124	1	1 610 900 034	groove ball bearing	534,00
126	1	2 603 490 023	Torx Oval-Head Screw	30,00
127	4	1 613 490 022	Torx Oval-Head Screw	48,00
128	6	1 613 414 026	Torx socket button screw .	48,00
129	6	1 613 490 024	Torx Oval-Head Screw	44,00
132	6	1 613 490 025	Torx Oval-Head Screw	48,00
133	3	1 613 490 026	Torx Oval-Head Screw	48,00
134	4	1 613 490 027	Torx Oval-Head Screw	48,00
139	1	1 610 209 017	Felt Washer .	105,00
143	1	1 614 601 071	Retaining ring .	45,00
144	1	1 610 101 023	Supporting Disc .	222,00
163	1	1 610 224 012	Spring retaining ring .	47,00
164	1	1 610 224 013	Spring retaining ring .	48,00
166	1	1 610 209 011	Solenoid Ring .	213,00
167	1	2 915 050 107	Hex Nut DIN 439-BM8-04 .	48,00

Item	Pc	Order no.	Description	LP IN INR
172	1	1 610 210 216	O-Ring .	54,00
173	2	1 610 100 021	Disc .	47,00
184	1	1 610 210 218	Damping Ring .	262,00
650	1	1 615 438 492	Carrying Case .	
810	1	1 617 000 750	Carbon Brush .	506,00
813	1	1 617 000 744	groove ball bearing .	711,00
820	1	1 617 000 745	Toolholder .	5.795,00
840	1	1 617 000 746	Impact Mechanism	12.197,00
841	1	1 617 000 747	Striker Pin .	2.697,00
845	1	1 617 000 748	Gear Cover .	3.050,00
847	1	1 617 000 749	Brush Holder .	1.787,00
856	1	1 617 000 751	Hammer Piston .	1.296,00
857	1	1 617 000 752	Striker .	1.524,00
870	1	1 617 000 753	Connecting Rod .	1.405,00
872	1	1 600 A00 5A4	Eccentric Cog Wheel .	4.144,00
878	1	1 610 210 215	O-Ring .	48,00
883	1	1 613 490 019	Hex Screw .	93,00
884	1	1 602 025 08T	Auxiliary Handle .	3.354,00
885	1	1 602 025 08J	Auxiliary Handle .	3.811,00
886	1	1 617 000 755	O-Ring .	352,00
887	1	1 617 000 756	O-Ring .	395,00
888	1	1 617 000 757	Parts Set .	368,00
897	1	1 617 000 758	Wear and Tear Part Set .	2.657,00

Please observe: Repairing, modifying and testing of electro-tools are to be performed professionally.The safety regulations according to IEC, EN, VDE, AFNOR and other regulations of the individual countries are to be observed. Subject to change.
This price list supersedes all previous edition. Prices are subjected to change without any prior notice.

BOSCH Power Tools	Demolition Hammer	Model GSH 14 C 3 611 C44 0F0 | BO

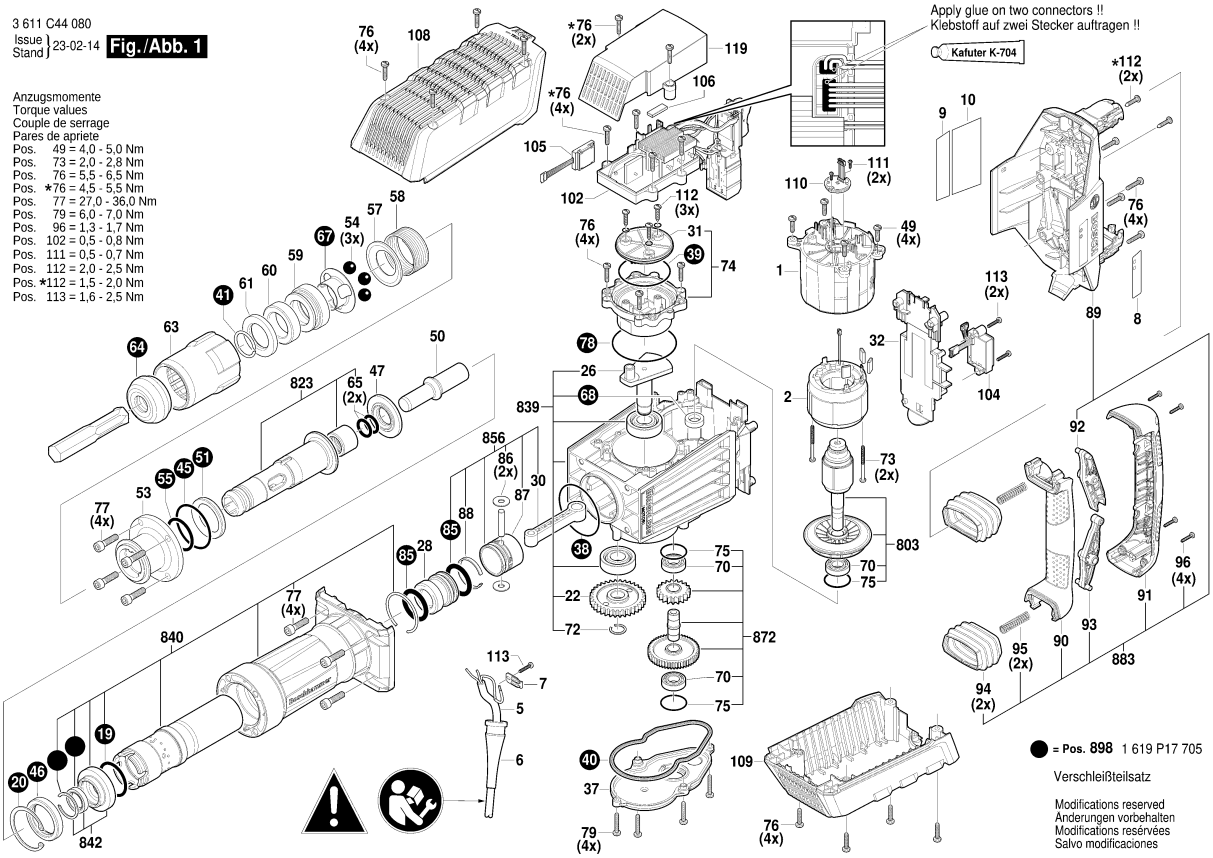

1 / 3

Model: 3 611 C44 0F0 = 230	Date:

Item	Pc	Order no.	Description	LP IN INR
1	1	1 619 P16 776	Motor Housing .	468,00
2	1	1 600 A02 1VS	Stator 220-240V .	3.440,00
5	1	1 619 P15 856	Power supply cord .	
6	1	1 610 703 053	Grommet Ø9,7-Ø12x89	65,00
7	1	1 601 302 018	Fastening Clamp .	51,00
8	1	1 619 P17 604	Nameplate .	
9	1	1 619 P16 778	Manufacturer's nameplate .	
10	1	1 619 P17 563	Sticker .	
19	1	1 619 P16 779	O-Ring .	123,00
20	1	1 619 P17 054	Retaining ring .	106,00
22	1	1 619 P16 781	Cylindrical Gear .	716,00
26	1	1 619 P16 785	Eccentric Shaft .	1.159,00
28	1	1 619 P16 786	Striker .	1.414,00
30	1	1 619 P16 788	Connecting Rod .	283,00
31	1	1 619 P16 789	Housing Cover .	153,00
32	1	1 619 P16 790	Switch Set .	246,00
37	1	1 619 P16 793	Bearing cover .	792,00
38	1	1 619 P16 794	O-Ring .	90,00
39	1	1 619 P16 795	O-Ring .	128,00
40	1	1 619 P16 796	Sealing Frame .	140,00
41	1	1 619 P17 056	Retaining ring .	78,00
45	1	1 619 P16 799	O-Ring .	83,00
46	1	1 619 P17 426	Damping Ring .	470,00
47	1	1 619 P16 801	Disc .	319,00

Item	Pc	Order no.	Description	LP IN INR
49	4	1 613 435 016	Torx Oval-Head Screw	49,00
50	1	1 619 P16 802	Striker Pin .	1.881,00
51	1	1 619 P16 803	Damping Ring .	353,00
53	1	1 619 P16 804	Flange .	2.832,00
54	3	1 619 P16 805	Ball .	82,00
55	1	1 619 P16 806	O-Ring .	97,00
57	1	1 619 P16 807	Holding Plate .	284,00
58	1	1 614 621 002	Compression Spring .	73,00
59	1	1 619 P16 808	Stop Sleeve .	1.057,00
60	1	1 619 P16 809	Damping Ring .	154,00
61	1	1 619 P16 810	Supporting Disc .	336,00
63	1	1 619 P16 812	Protection Sleeve .	284,00
64	1	1 619 P16 813	Protective Cap .	292,00
65	2	1 619 P16 814	O-Ring .	295,00
67	1	1 619 P16 815	Indexing Disk .	214,00
68	1	1 610 290 119	Shaft Seal .	199,00
70	3	1 619 P10 533	groove ball bearing .	236,00
72	1	3 600 224 001	Retaining ring .	47,00
73	2	1 613 435 009	Tapping Screw	50,00
74	1	1 619 P16 816	Grease Cartridge .	196,00
75	3	1 610 210 130	O-Ring 32,0x2,5 MM .	113,00
76	20	1 619 P07 816	Torx Oval-Head Screw	35,00
77	8	2 910 151 246	Hex Socket Head Cap	30,00
78	1	1 619 P16 817	O-Ring .	102,00

Please observe: Repairing, modifying and testing of electro-tools are to be performed professionally.The safety regulations according to IEC, EN, VDE, AFNOR and other regulations of the individual countries are to be observed. Subject to change.
This price list supersedes all previous edition. Prices are subjected to change without any prior notice.

3 611 C44 080
Issue / Stand 22-11-29 **Fig./Abb. 2**

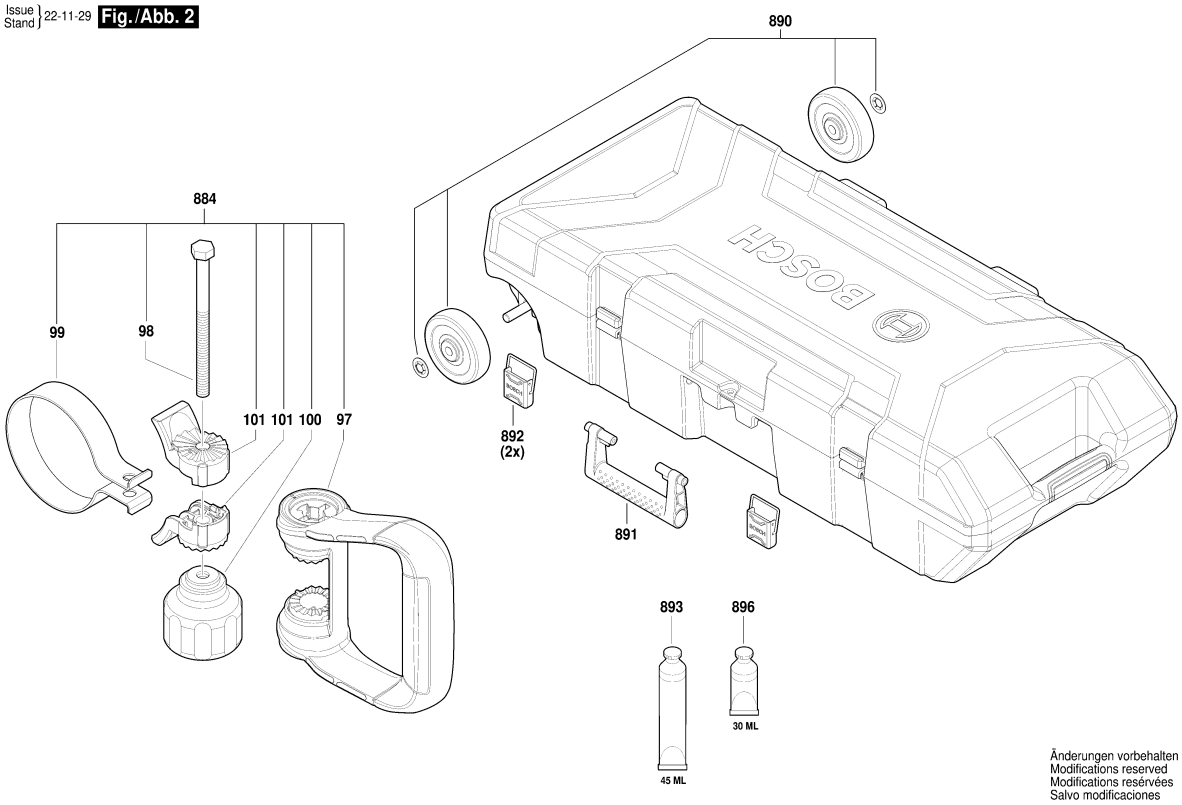

Model: 3 611 C44 0F0 = 230 | Date:

Item	Pc	Order no.	Description	LP IN INR
79	4	3 603 435 003	Thread-forming tap. Screw	63,00
85	2	1 610 210 217	O-Ring .	276,00
86	2	1 610 100 021	Disc .	47,00
87	1	1 613 101 014	Straight Pin .	105,00
88	1	1 610 500 024	Retaining snap ring .	49,00
89	1	1 619 P16 818	Rear Housing Section .	978,00
90	1	1 615 132 133	Handle Cover .	362,00
91	1	1 615 132 134	Handle Cover .	695,00
92	1	1 612 026 159	Reverse-Transfer Lever .	154,00
93	1	1 612 026 160	Reverse-Transfer Lever .	148,00
94	1	1 619 P17 119	Bellows .	156,00
95	2	1 619 P17 120	Compression Spring .	73,00
96	4	1 619 P00 105	Torx Oval-Head Screw	30,00
97	1	1 602 025 08D	Auxiliary Handle .	2.117,00
98	1	2 911 021 267	Hex Screw .	47,00
99	1	1 611 316 028	Clamping Band .	309,00
100	1	1 619 P16 922	Star Knob .	283,00
101	2	1 600 A00 8BL	Clamping Piece .	44,00
102	1	1 619 P17 148	Electronic Module .	11.750,00
104	1	1 619 P16 865	Electronic Module .	1.665,00
105	1	1 619 P17 197	Electronics Module .	1.281,00
106	1	1 619 P17 108	Damper .	71,00
108	1	1 619 P16 826	Cover .	1.087,00
109	1	1 619 P16 827	Cover .	977,00

Item	Pc	Order no.	Description	LP IN INR
110	1	1 619 P16 864	Electronic Module .	607,00
111	2	1 619 P00 220	Torx Oval-Head Screw	30,00
112	5	1 613 435 012	Torx Oval-Head Screw	46,00
113	3	2 603 490 023	Torx Oval-Head Screw	30,00
119	1	1 619 P16 829	Cover .	317,00
803	1	1 619 P17 697	Rotor .	5.661,00
823	1	1 619 P17 701	Toolholder .	6.639,00
824	1	1 619 P17 797	Disc .	1.693,00
839	1	1 619 P17 700	Gear Housing .	8.301,00
840	1	1 619 P17 699	Impact Mechanism	8.664,00
842	1	1 619 P17 797	Disc .	1.693,00
856	1	1 619 P17 702	Hammer Piston .	2.194,00
872	1	1 619 P17 698	Cylindrical Gear .	3.251,00
883	1	1 619 P17 703	Handle .	3.118,00
884	1	1 619 P17 704	Auxiliary Handle .	2.261,00
890	1	1 619 P17 891	Wheel Set .	1.863,00
891	1	1 619 P17 892	Handle .	242,00
892	2	1 619 P17 893	Lock .	208,00
893	1	1 615 430 014	Grease Tube 45 ML .	193,00
896	1	1 615 430 010	Grease Tube 30 ML .	116,00
898	1	1 619 P17 705	Wear and Tear Part Set .	2.516,00

Please observe: Repairing, modifying and testing of electro-tools are to be performed professionally.The safety regulations according to IEC, EN, VDE, AFNOR and other regulations of the individual countries are to be observed. Subject to change.
This price list supersedes all previous edition. Prices are subjected to change without any prior notice.

3 611 C44 080
Issue Stand 23-05-10 **Fig./Abb. 3**

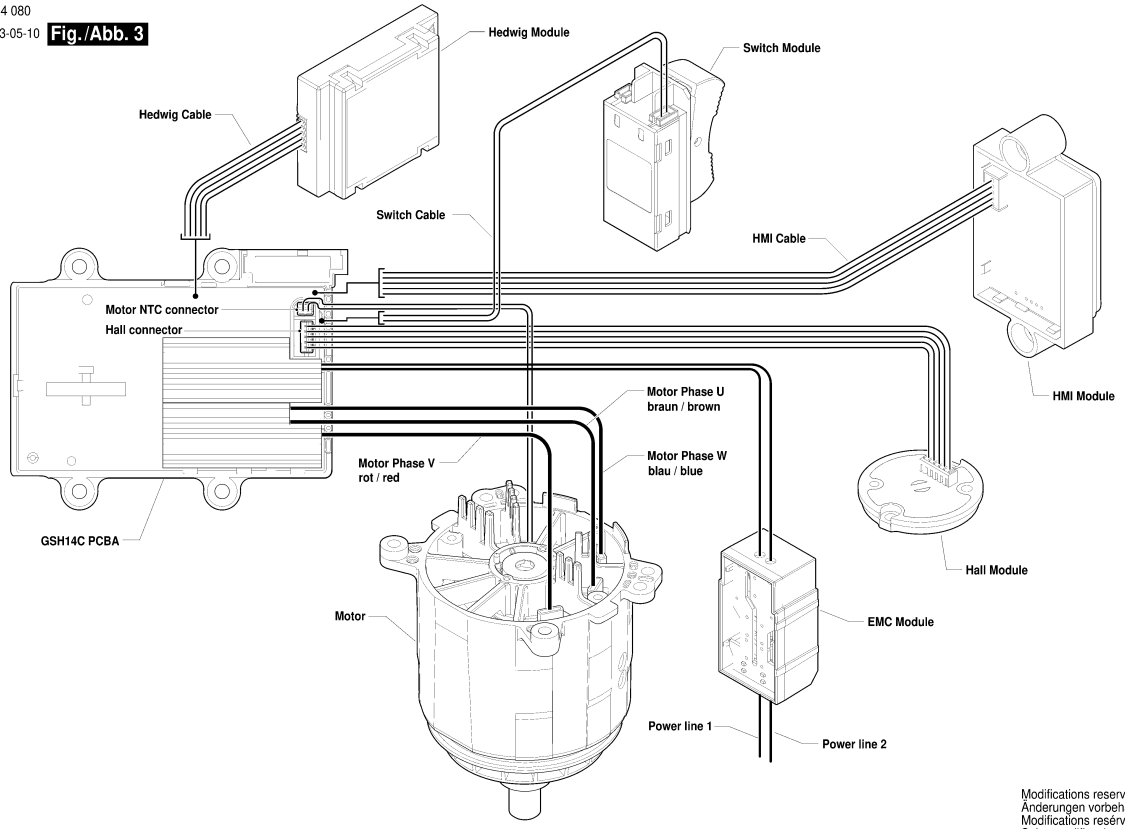

Modifications reserved
Änderungen vorbehalten
Modifications reservées
Salvo modificaciones

Model: 3 611 C44 0F0 = 230 | Date:

Item	Pc	Order no.	Description	LP IN INR	Item	Pc	Order no.	Description	LP IN INR

Please observe: Repairing, modifying and testing of electro-tools are to be performed professionally. The safety regulations according to IEC, EN, VDE, AFNOR and other regulations of the individual countries are to be observed. Subject to change.
Spare parts delivery via BOSCH power tool customer service location. For spare parts ordering, please include the 10-place order number.
Prices shown are suggested retail prices.
This price list supersedes all previous edition. Prices are subjected to change without any prior notice.

BOSCH Power Tools	Demolition Hammer	Model GSH 16-30 3 611 C35 1K0 | BO

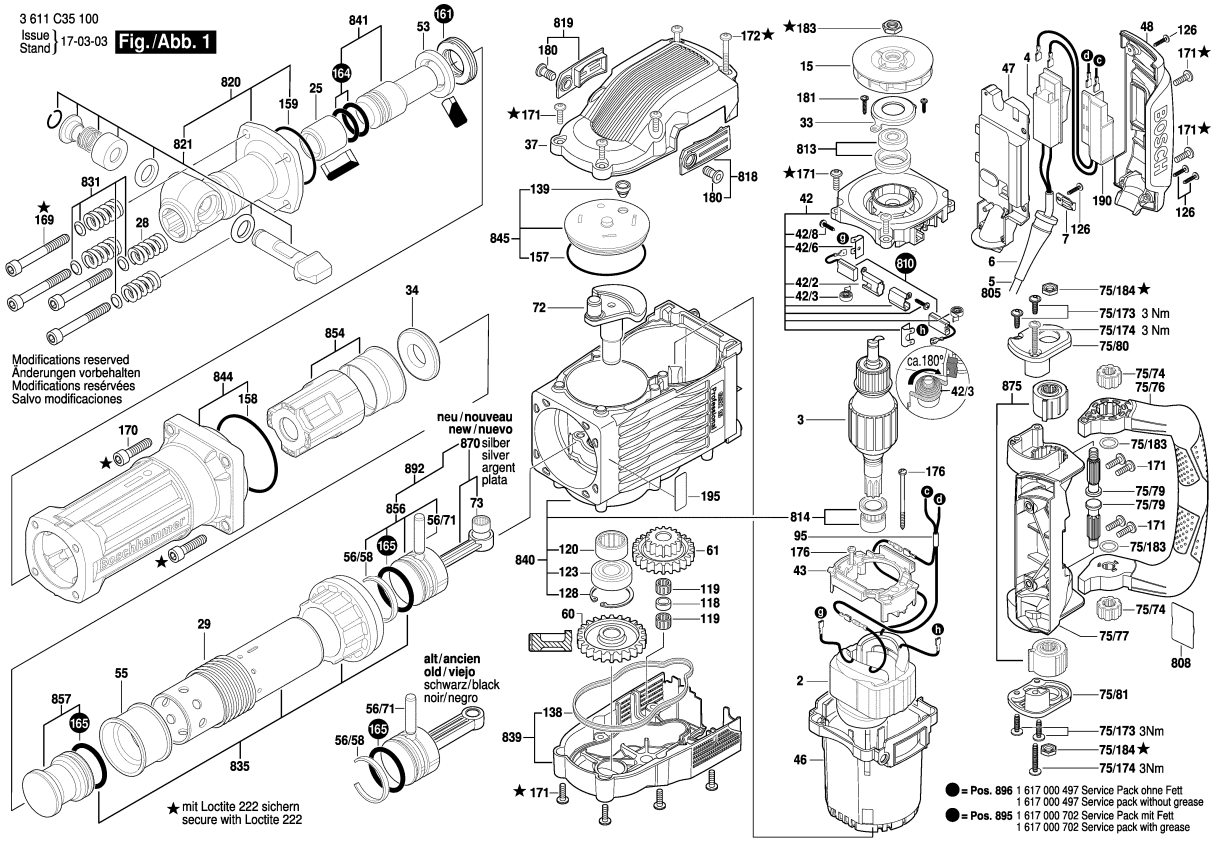

Model: 3 611 C35 1K0 = 230 | Date:

Item	Pc	Order no.	Description	LP IN INR
2	1	1 604 220 52M	Field 220-240V .	4.556,00
3	1	1 614 011 117	Armature 220-240V .	9.820,00
4	1	1 607 200 244	Switch .	1.068,00
6	1	1 610 703 053	Grommet Ø9,7-Ø12x89	65,00
7	1	1 601 302 018	Fastening Clamp .	51,00
15	1	1 616 610 102	Fan .	695,00
25	1	1 610 300 070	Guide Ring .	895,00
28	4	1 614 614 006	Compression Spring .	181,00
29	1	1 614 614 007	Compression Spring .	263,00
33	1	1 611 006 008	Holding Plate .	336,00
34	1	1 610 102 635	Supporting Disc .	464,00
37	1	1 615 500 380	Fan Cover .	1.471,00
42	1	1 614 336 078	Brush Holder .	1.819,00
42/2	2	1 614 336 017	Brush Guide .	190,00
42/3	2	1 614 652 007	Spiral Spring .	147,00
42/6	2	1 611 390 005	Connector .	154,00
42/8	4	2 912 401 412	Tapping Screw .	47,00
43	1	1 610 508 054	Spacer .	68,00
46	1	1 615 106 053	Motor Housing .	1.462,00
47	1	1 618 000 028	Base Plate .	525,00
48	1	1 615 500 383	Housing Cover .	1.182,00
53	1	1 610 190 058	Stop Disc .	510,00
55	1	1 610 506 019	Control Bushing .	1.273,00
56/58	1	1 610 500 023	Retaining snap ring .	190,00

Item	Pc	Order no.	Description	LP IN INR
56/71	1	1 613 101 012	Piston Pin .	150,00
60	1	1 616 317 086	Cylindrical Gear .	3.560,00
61	1	1 616 317 093	Cylindrical Gear .	4.297,00
72	1	1 600 A01 4TW	Eccentric Shaft .	4.887,00
73	1	1 600 A00 14G	Needle bearing .	230,00
75/74	2	1 613 060 049	Splined coupling .	336,00
75/76	1	1 618 045 022	Strap-Shaped Handle .	2.744,00
75/77	1	1 615 805 069	Bearing Pedestal .	1.169,00
75/79	2	1 613 060 050	Toothed Shaft .	364,00
75/80	1	1 615 500 376	Bearing cover .	295,00
75/81	1	1 615 500 377	Bearing cover .	295,00
75/173	4	1 613 490 008	Torx Oval-Head Screw	31,00
75/174	2	1 613 490 009	Torx Oval-Head Screw	47,00
75/183	2	2 916 280 013	Supporting Disc	31,00
75/184	2	1 613 349 021	Hex Nut .	60,00
86	1	2 911 021 267	Hex Screw .	47,00
87	1	1 600 A00 AR5	Clamping Band .	1.252,00
88	1	1 619 P16 922	Star Knob .	283,00
95	1	1 614 448 038	Connecting Cable .	155,00
118	1	1 610 520 003	Spacer Tube .	88,00
119	2	1 610 913 020	Needle-Roller Assembly .	71,00
120	1	1 610 910 092	Needle-Roller Bearing	1.138,00
123	1	1 610 900 030	groove ball bearing	635,00
126	4	2 603 490 023	Torx Oval-Head Screw	30,00

Please observe: Repairing, modifying and testing of electro-tools are to be performed professionally.The safety regulations according to IEC, EN, VDE, AFNOR and other regulations of the individual countries are to be observed. Subject to change.
This price list supersedes all previous edition. Prices are subjected to change without any prior notice.

3 611 C35 100
Issue / Stand 14-09-15 **Fig./Abb. 2**

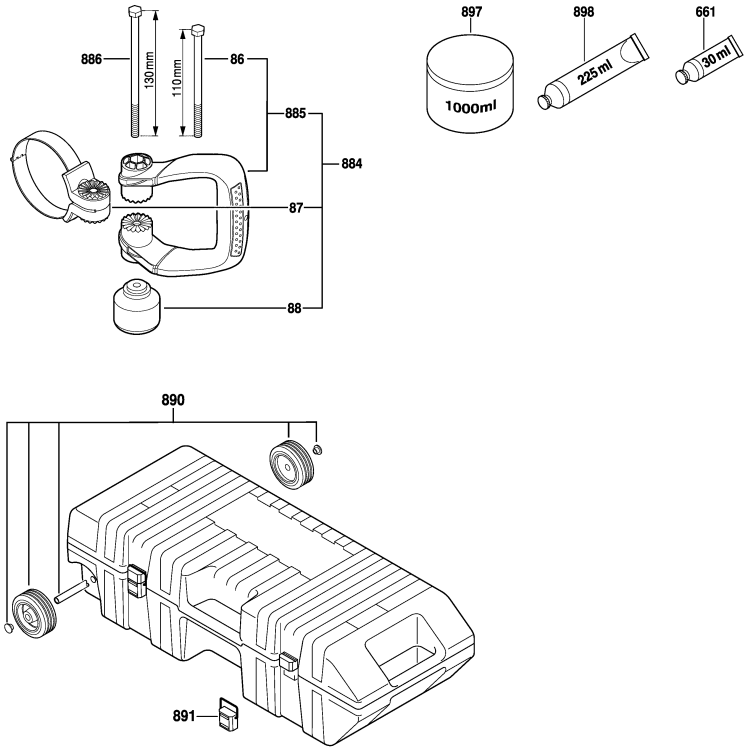

Modifications reserved
Änderungen vorbehalten
Modifications resérvées
Salvo modificaciones

Model: 3 611 C35 1K0 = 230 | Date:

Item	Pc	Order no.	Description	LP IN INR
128	1	2 916 660 021	Spring retaining ring	120,00
138	1	1 611 015 059	Sealing Frame .	103,00
139	1	1 610 508 050	Plug .	62,00
157	1	1 610 210 192	O-Ring .	86,00
158	1	1 610 210 191	O-Ring .	86,00
159	1	1 600 210 005	O-Ring 66,0x3,0 MM .	64,00
161	1	1 610 290 118	Damping Ring .	171,00
164	2	1 610 210 194	O-Ring .	71,00
165	2	1 610 210 195	O-Ring .	219,00
169	4	1 613 414 022	Hex Socket Head Cap	116,00
170	4	1 613 414 023	Hex Socket Head Cap	47,00
171	18	1 613 490 010	Torx Oval-Head Screw	47,00
172	2	1 613 490 011	Torx Oval-Head Screw	47,00
176	2	1 603 435 036	Tapping Screw 4,8x78 MM,	53,00
180	2	1 613 490 007	Clamp Screw .	47,00
181	2	2 603 490 022	Screw 4x16 .	30,00
183	1	1 613 349 020	Hex Nut .	62,00
190	1	1 614 503 007	Suppression Filter .	1.334,00
195	1	1 611 110 D43	Sticker .	
661	1	1 615 430 010	Grease Tube 30 ML .	116,00
805	1	1 617 000 723	Power supply cord .	3.844,00
808	1	1 601 11A 3H3	Nameplate .	
810	1	1 617 014 143	Carbon-Brush Set .	713,00
813	1	1 617 000 480	Bearing .	489,00

Item	Pc	Order no.	Description	LP IN INR
814	1	1 617 000 481	Bearing .	1.095,00
818	1	1 617 000 482	Brush-Cover .	179,00
819	1	1 617 000 483	Brush-Cover .	179,00
820	1	1 617 000 722	Toolholder .	17.257,00
821	1	1 617 000 721	Locking Bolt Set .	3.985,00
831	1	1 617 000 A4Z	Plain Washer .	496,00
835	1	1 617 000 709	Guide Tube .	9.500,00
839	1	1 617 000 489	Gear Cover .	3.654,00
840	1	1 617 000 490	Gear Housing .	20.666,00
841	1	1 617 000 491	Striker Pin .	3.215,00
844	1	1 617 000 492	Hammer Pipe .	7.307,00
845	1	1 617 000 710	Sealing cap .	595,00
854	1	1 617 000 740	Spacer Tube .	1.154,00
856	1	1 607 000 C3N	Hammer Piston .	1.649,00
857	1	1 617 000 495	Striker .	2.576,00
870	1	1 607 000 C3P	Connecting Rod .	828,00
875	1	1 617 000 496	Rubber Torsion-Bar .	2.251,00
884	1	1 602 025 08K	Auxiliary Handle .	2.684,00
885	1	1 605 132 163	Handle .	1.391,00
886	1	2 911 011 270	Hex Screw DIN	38,00
890	1	1 617 000 716	Wheel Set .	2.192,00
891	1	1 617 000 715	Lock .	439,00
892	1	1 607 000 C3M	Hammer Piston .	2.192,00
895	1	1 617 000 702	Wear and Tear Part Set .	2.238,00

Please observe: Repairing, modifying and testing of electro-tools are to be performed professionally.The safety regulations according to IEC, EN, VDE, AFNOR and other regulations of the individual countries are to be observed. Subject to change.
This price list supersedes all previous edition. Prices are subjected to change without any prior notice.

3 611 C35 100
Issue Stand 14-09-15 **Fig./Abb. 2**

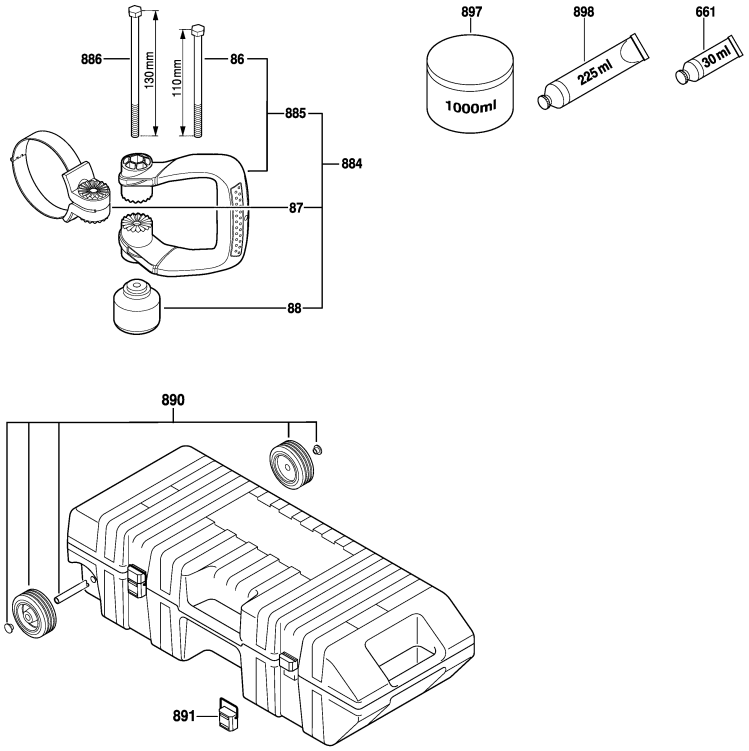

Modifications reserved
Änderungen vorbehalten
Modifications resérvées
Salvo modificaciones

Model: 3 611 C35 1K0 = 230 | Date:

Item	Pc	Order no.	Description	LP IN INR
896	1	1 617 000 497	Wear and Tear Part Set .	1.023,00
897	1	1 615 430 016	Lubricating Grease 1000	3.485,00
898	1	1 615 430 015	Grease Tube 225 ML .	1.043,00

Item	Pc	Order no.	Description	LP IN INR

Please observe: Repairing, modifying and testing of electro-tools are to be performed professionally.The safety regulations according to IEC, EN, VDE, AFNOR and other regulations of the individual countries are to be observed. Subject to change.
This price list supersedes all previous edition. Prices are subjected to change without any prior notice.

BOSCH Power Tools	Marble Saw	Model GDC 120 3 601 C93 0F1 | BO

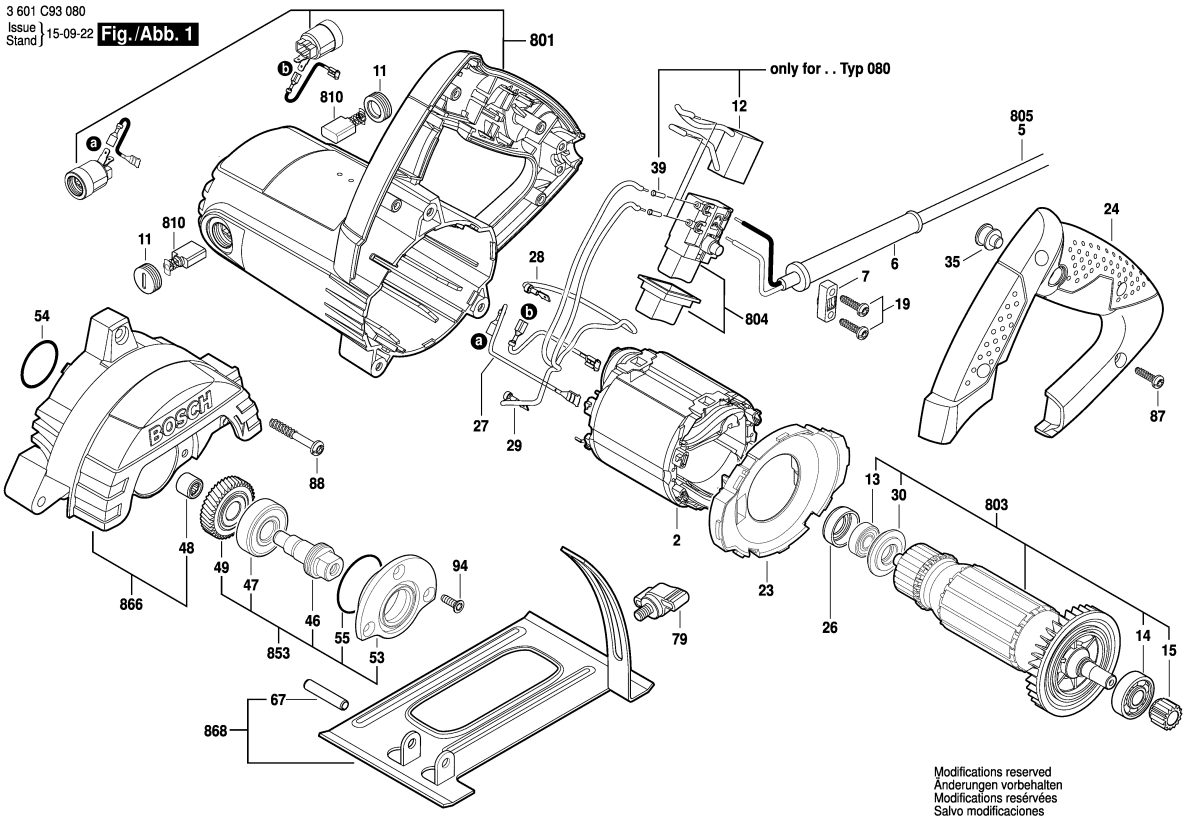

Model: 3 601 C93 0F1 = 220 | Date:

Item	Pc	Order no.	Description	LP IN INR
2	1	1 619 P08 330	Field 230V .	495,00
5	1	1 604 460 752	Power supply cord EU	
6	1	F 002 G31 081	Grommet .	30,00
7	1	1 619 P06 313	Cable Clip .	30,00
11	2	1 619 P06 286	Insulating Cap .	77,00
13	1	2 600 905 032	Ball Bearing 7x19x6 .	164,00
15	1	F 000 618 002	Cylindrical Gear .	142,00
23	1	1 619 P10 017	Air-Deflector Ring .	45,00
24	1	1 619 P10 018	Handle Cover .	60,00
26	1	1 619 P06 227	Rubber Ring .	30,00
27	1	1 600 A00 Z84	Connecting Cable .	
28	1	1 600 A00 Z85	Connecting Cable .	33,00
29	1	1 600 A00 Z86	Connecting Cable .	
30	1	1 619 P04 476	Sealing disk .	34,00
35	1	1 619 P06 293	Protecting Cover .	34,00
46	1	F 000 619 026	Spindle .	166,00
47	1	1 619 P00 352	groove ball bearing .	238,00
48	1	1 600 200 029	Plain bearing .	30,00
49	1	F 000 617 024	Cylindrical Gear .	186,00
53	1	1 619 P07 061	Bearing Flange .	139,00
54	1	F 000 640 007	O-Ring .	36,00
55	1	F 000 640 008	O-Ring .	36,00
67	1	2 917 760 156	Slotted Spring Pin 6x32	36,00
79	1	1 603 480 02E	Wing Screw .	47,00

Item	Pc	Order no.	Description	LP IN INR
87	4	2 603 490 022	Screw 4x16 .	30,00
88	3	1 619 P06 301	Torx Oval-Head Screw	36,00
94	3	1 619 P07 062	Thread-Forming Screw .	34,00
650/1	1	1 619 P06 295	Washer .	51,00
650/2	1	1 619 P07 057	Retaining Washer .	118,00
650/3	1	1 619 P10 156	Chuck Wrench .	41,00
650/25	1	1 619 P00 278	Hex Screw .	59,00
650/653	1	2 610 364 015	Hexagon Socket Screw	87,00
801	1	1 619 P10 367	Housing Set .	276,00
803	1	1 619 P10 368	Armature set 230V .	842,00
804	1	1 619 P10 369	Switch .	137,00
810	1	1 619 P10 371	Carbon-Brush Set .	80,00
853	1	1 619 P07 457	Spindle Assembly .	523,00
866	1	1 619 P10 373	Gear Housing .	240,00
868	1	1 619 P13 158	Base Plate .	335,00

Please observe: Repairing, modifying and testing of electro-tools are to be performed professionally.The safety regulations according to IEC, EN, VDE, AFNOR and other regulations of the individual countries are to be observed. Subject to change.
This price list supersedes all previous edition. Prices are subjected to change without any prior notice.

3 601 C93 080
Issue / Stand } 12-08-31 **Fig./Abb. 2**

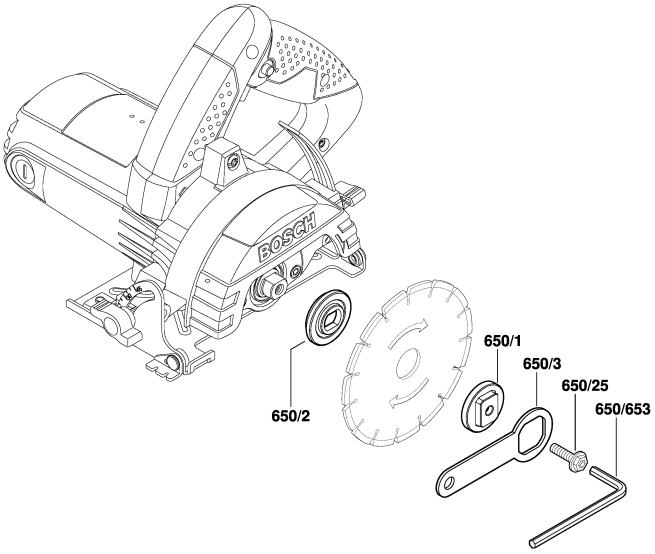

Modifications reserved
Änderungen vorbehalten
Modifications reservées
Salvo modificaciones

Model: 3 601 C93 0F1 = 220	Date:

Item	Pc	Order no.	Description	LP IN INR	Item	Pc	Order no.	Description	LP IN INR

Please observe: Repairing, modifying and testing of electro-tools are to be performed professionally.The safety regulations according to IEC, EN, VDE, AFNOR and other regulations of the individual countries are to be observed. Subject to change.
This price list supersedes all previous edition. Prices are subjected to change without any prior notice.

BOSCH Power Tools	Marble Saw	Model GDC 121 3 601 C93 1F1 | BO

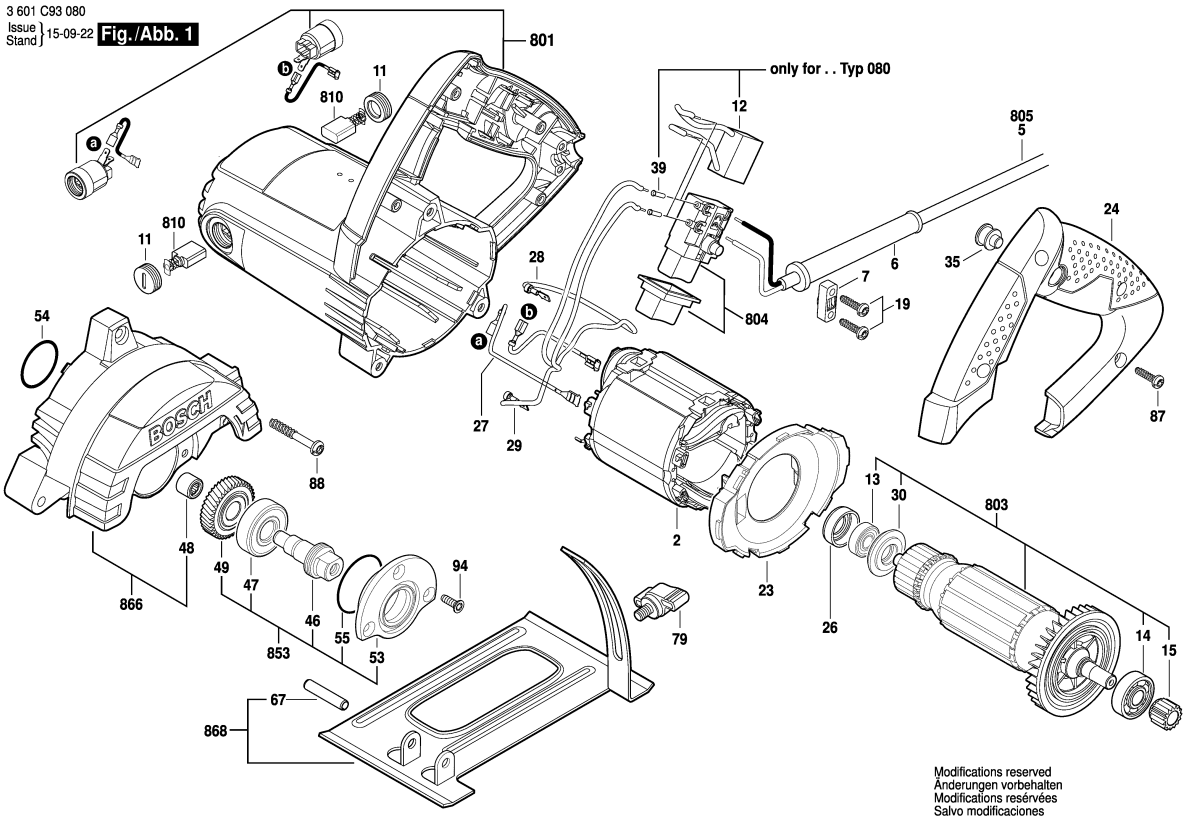

Model: 3 601 C93 1F1 = 220 | Date:

Item	Pc	Order no.	Description	LP IN INR
2	1	1 619 P08 330	Field 230V .	495,00
5	1	1 604 460 752	Power supply cord EU	
6	1	F 002 G31 081	Grommet .	30,00
7	1	1 619 P06 313	Cable Clip .	30,00
11	2	1 619 P06 286	Insulating Cap .	77,00
13	1	2 600 905 032	Ball Bearing 7x19x6 .	164,00
15	1	F 000 618 002	Cylindrical Gear .	142,00
23	1	1 619 P10 017	Air-Deflector Ring .	45,00
24	1	1 619 P10 018	Handle Cover .	60,00
26	1	1 619 P06 227	Rubber Ring .	30,00
27	1	1 600 A00 Z84	Connecting Cable .	
28	1	1 600 A00 Z85	Connecting Cable .	33,00
29	1	1 600 A00 Z86	Connecting Cable .	0,00
30	1	1 619 P04 476	Sealing disk .	34,00
35	1	1 619 P06 293	Protecting Cover .	34,00
46	1	F 000 619 026	Spindle .	166,00
47	1	1 619 P00 352	groove ball bearing .	238,00
48	1	1 600 200 029	Plain bearing .	30,00
49	1	F 000 617 024	Cylindrical Gear .	186,00
53	1	1 619 P07 061	Bearing Flange .	139,00
54	1	F 000 640 007	O-Ring .	36,00
55	1	F 000 640 008	O-Ring .	36,00
67	1	2 917 760 156	Slotted Spring Pin 6x32	36,00
79	1	1 603 480 02E	Wing Screw .	47,00

Item	Pc	Order no.	Description	LP IN INR
87	4	2 603 490 022	Screw 4x16 .	30,00
88	3	1 619 P06 301	Torx Oval-Head Screw	36,00
94	3	1 619 P07 062	Thread-Forming Screw .	34,00
650/1	1	1 619 P06 295	Washer .	51,00
650/2	1	1 619 P07 057	Retaining Washer .	118,00
650/3	1	1 619 P10 156	Chuck Wrench .	41,00
650/25	1	1 619 P00 278	Hex Screw .	59,00
650/653	1	2 610 364 015	Hexagon Socket Screw	87,00
801	1	1 619 P10 367	Housing Set .	276,00
803	1	1 619 P10 368	Armature set 230V .	842,00
804	1	1 619 P10 369	Switch .	137,00
810	1	1 619 P10 371	Carbon-Brush Set .	80,00
853	1	1 619 P07 457	Spindle Assembly .	523,00
866	1	1 619 P13 508	Gear Housing .	579,00
868	1	1 619 P13 509	Base Plate .	334,00

Please observe: Repairing, modifying and testing of electro-tools are to be performed professionally.The safety regulations according to IEC, EN, VDE, AFNOR and other regulations of the individual countries are to be observed. Subject to change.
This price list supersedes all previous edition. Prices are subjected to change without any prior notice.

3 601 C93 080
Issue / Stand } 12-08-31 **Fig./Abb. 2**

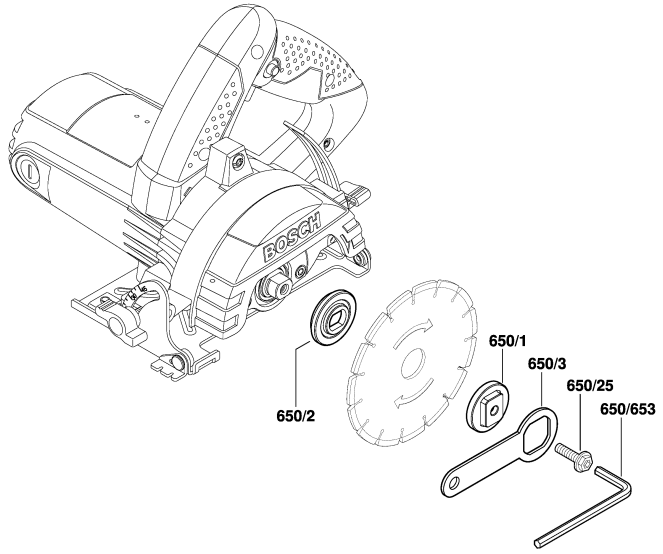

Modifications reserved
Änderungen vorbehalten
Modifications reservées
Salvo modificaciones

Model: 3 601 C93 1F1 = 220	Date:

Item	Pc	Order no.	Description	LP IN INR	Item	Pc	Order no.	Description	LP IN INR

Please observe: Repairing, modifying and testing of electro-tools are to be performed professionally.The safety regulations according to IEC, EN, VDE, AFNOR and other regulations of the individual countries are to be observed. Subject to change.
This price list supersedes all previous edition. Prices are subjected to change without any prior notice.

BOSCH Power Tools	Marble Saw	Model GDC 140 3 601 CA4 0F1 | BO

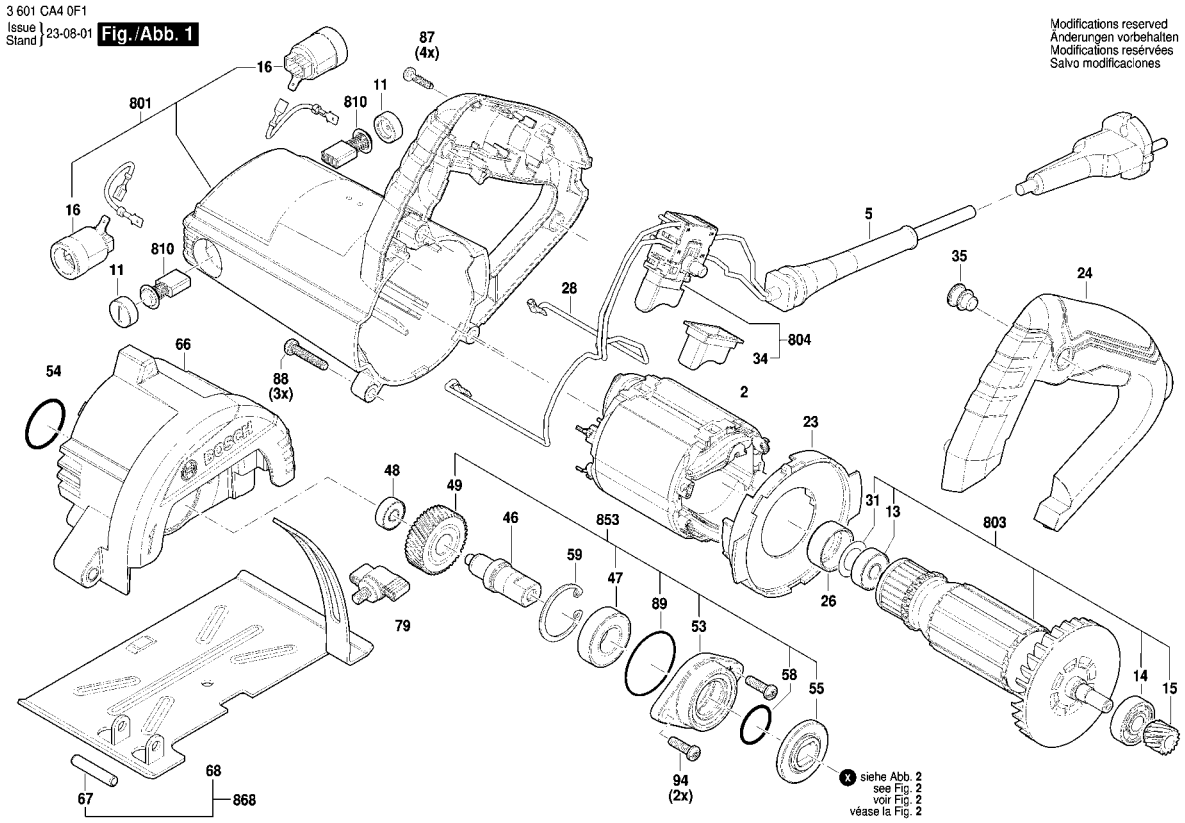

1 / 2

Model: 3 601 CA4 0F1 = 220 | Date:

Item	Pc	Order no.	Description	LP in INR
2	1	1 604 220 5BC	Field 230V .	520,00
5	1	1 604 460 77G	Power supply cord .	164,00
11	2	1 619 P06 286	Insulating Cap .	77,00
13	1	2 600 905 110	groove ball bearing 8x22x7	188,00
14	1	1 619 P00 290	groove ball bearing .	158,00
15	1	1 619 P20 450	Pinion .	88,00
16	2	1 619 P06 287	Carbon Brush Holder .	90,00
23	1	1 619 P17 680	Baffle .	36,00
24	1	1 619 P13 817	Handle .	67,00
26	1	1 600 A01 N01	Rubber Ring .	36,00
28	2	1 600 A00 Z85	Connecting Cable .	33,00
31	1	2 600 101 665	Shim washer 0,2 MM .	41,00
34	1	1 619 P20 279	Protection cover .	42,00
35	1	1 619 P20 329	Protection cover .	64,00
46	1	1 619 P13 825	Output Shaft .	94,00
47	1	2 610 015 361	groove ball bearing .	67,00
48	1	1 619 P00 285	groove ball bearing .	39,00
49	1	1 619 P20 451	Gear .	132,00
53	1	1 619 P20 449	Flange .	69,00
54	1	F 000 640 007	O-Ring .	36,00
55	1	1 619 P13 830	Sealing washer .	46,00
56	1	1 619 P13 831	Washer .	57,00
57	1	1 619 P00 278	Hex Screw .	59,00
58	1	1 619 P13 832	O-Ring .	28,00

Item	Pc	Order no.	Description	LP in INR
59	1	2 916 660 013	Retaining clip DIN	48,00
66	1	1 619 P20 448	Upper guard .	531,00
67	1	2 917 760 156	Slotted Spring Pin 6x32	36,00
68	1	1 619 P13 826	Base Plate .	240,00
79	1	1 603 480 02E	Wing Screw .	47,00
87	4	2 603 490 022	Screw 4x16 .	30,00
88	2	2 603 410 054	Thread-forming tap. Screw	28,00
89	1	F 000 640 008	O-Ring .	36,00
94	2	2 603 410 054	Thread-forming tap. Screw	28,00
651	1	1 619 P20 278	Chuck Wrench .	44,00
652	1	2 610 364 015	Hexagon Socket Screw	87,00
801	1	1 600 A03 03G	Housing Set .	329,00
803	1	1 604 010 BV0	Armature .	867,00
804	1	1 607 200 39R	Switch .	137,00
810	1	1 619 P10 371	Carbon-Brush Set .	80,00
853	1	1 607 200 39S	Spindle .	557,00
868	1	1 607 200 39T	Base Plate .	245,00

Please observe: Repairing, modifying and testing of electro-tools are to be performed professionally.The safety regulations according to IEC, EN, VDE, AFNOR and other regulations of the individual countries are to be observed. Subject to change.
This price list supersedes all previous edition. Prices are subjected to change without any prior notice.

3 601 CA4 0F1
Issue / Stand 23-07-26 **Fig./Abb. 2**

Modifications reserved
Änderungen vorbehalten
Modifications reservées
Salvo modificaciones

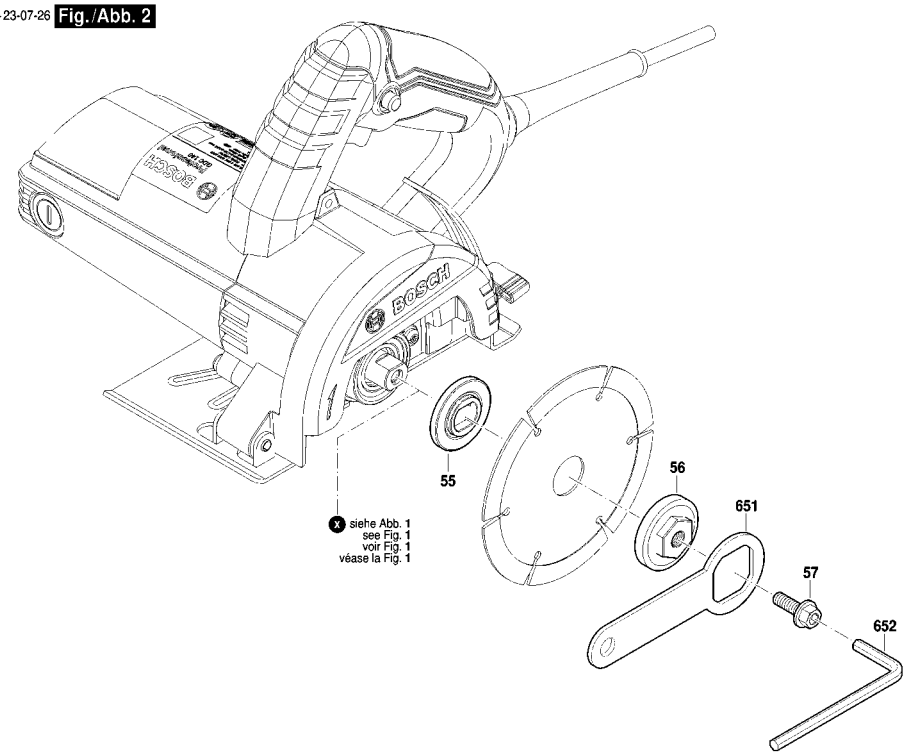

Model: 3 601 CA4 0F1 = 220 | Date:

Item	Pc	Order no.	Description	LP in INR	Item	Pc	Order no.	Description	LP in INR

Please observe: Repairing, modifying and testing of electro-tools are to be performed professionally.The safety regulations according to IEC, EN, VDE, AFNOR and other regulations of the individual countries are to be observed. Subject to change.
This price list supersedes all previous edition. Prices are subjected to change without any prior notice.

BOSCH Power Tools	Marble Saw	Model GDC 141 3 601 CA4 1F0 | BO

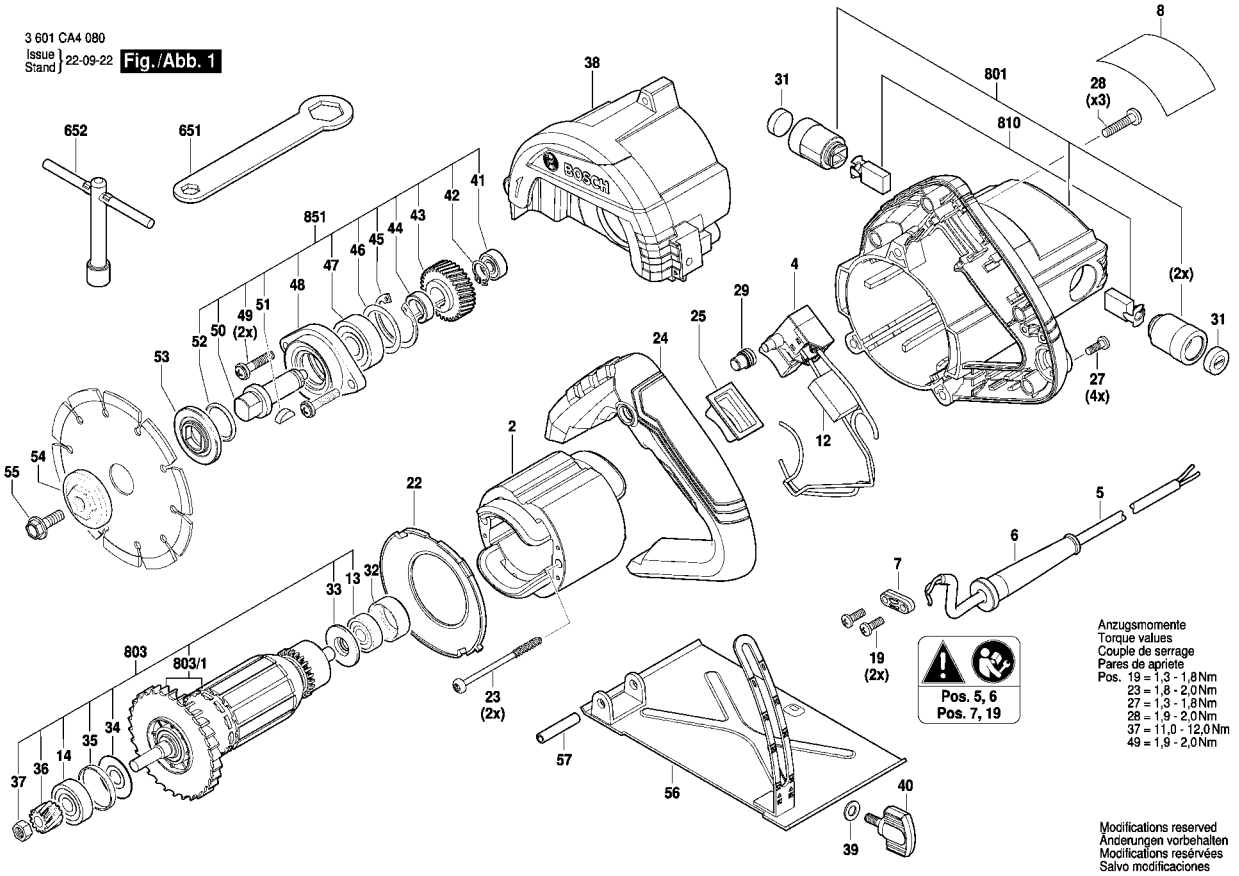

Model: 3 601 CA4 1F0 = 220 | Date:

Item	Pc	Order no.	Description	LP in INR
2	1	1 619 PB8 856	Field .	600,00
4	1	1 619 PB5 623	Switch .	138,00
5	1	1 619 PB7 280	Power supply cord .	
6	1	1 619 PB5 767	Cord guard .	29,00
7	1	1 619 PB5 768	Cable Clip .	29,00
8	1	1 619 PB7 281	Nameplate .	
12	1	1 619 PB5 771	Capacitor .	29,00
13	1	1 619 PB5 758	groove ball bearing .	49,00
14	1	1 619 PB5 759	groove ball bearing .	90,00
19	2	1 619 PB5 793	Screw .	29,00
22	1	1 619 PB5 763	Air-Deflector Ring .	29,00
23	2	1 619 PB5 794	Screw .	29,00
24	1	1 619 PB5 764	Handle .	102,00
25	1	1 619 PB5 772	Cap .	149,00
27	4	1 619 PB5 795	Screw .	29,00
28	3	1 619 PB5 796	Screw .	29,00
29	1	1 619 PB5 773	Cap .	29,00
31	2	1 619 PB5 756	Insulating Cap .	29,00
32	1	1 619 PB5 775	Bearing Sleeve .	29,00
33	1	1 619 PB5 776	Rubber Ring .	26,00
34	1	1 619 PB5 777	Washer .	26,00
35	1	1 619 PB5 778	Rectangular Ring .	35,00
36	1	1 619 PB7 283	Gear .	74,00
37	1	1 619 PB5 779	Hex Nut .	26,00

Item	Pc	Order no.	Description	LP in INR
38	1	1 619 PB7 282	Gear Box .	476,00
39	1	1 619 PB5 780	Washer .	29,00
40	1	1 619 PB5 792	Wing Screw .	29,00
41	1	1 619 PB5 757	groove ball bearing .	58,00
42	1	1 619 PB5 781	Spring retaining ring .	26,00
43	1	1 619 PB7 284	Pinion .	88,00
44	1	1 619 PB5 782	bushing .	26,00
45	1	1 619 PB5 783	Spring retaining ring .	26,00
46	1	1 619 PB5 784	Washer .	26,00
47	1	1 619 PB5 760	groove ball bearing .	157,00
48	1	1 619 PB5 785	Upper guard .	55,00
49	2	1 619 PB5 798	Screw .	29,00
50	1	1 619 PB5 786	Output Shaft .	97,00
51	1	1 600 A02 3FS	Woodruff Key .	26,00
52	1	1 619 PB5 765	Rubber Ring .	26,00
53	1	1 619 PB5 787	Clamping Flange .	29,00
54	1	1 619 PB5 788	Clamping Flange .	35,00
55	1	1 619 PB5 789	Bolt .	29,00
56	1	1 619 PB7 285	Base .	254,00
57	1	1 619 PB5 791	Slotted Spring Pin .	29,00
651	1	1 619 PB5 742	Spanner .	40,00
652	1	1 619 PB5 743	Socket Wrench .	66,00
801	1	1 619 PB5 911	Housing Set .	403,00
803	1	1 619 PB7 286	Armature assembly .	1.010,00

Please observe: Repairing, modifying and testing of electro-tools are to be performed professionally.The safety regulations according to IEC, EN, VDE, AFNOR and other regulations of the individual countries are to be observed. Subject to change.
This price list supersedes all previous edition. Prices are subjected to change without any prior notice.

BOSCH Power Tools	Marble Saw	Model GDC 141 3 601 CA4 1F0 | BO

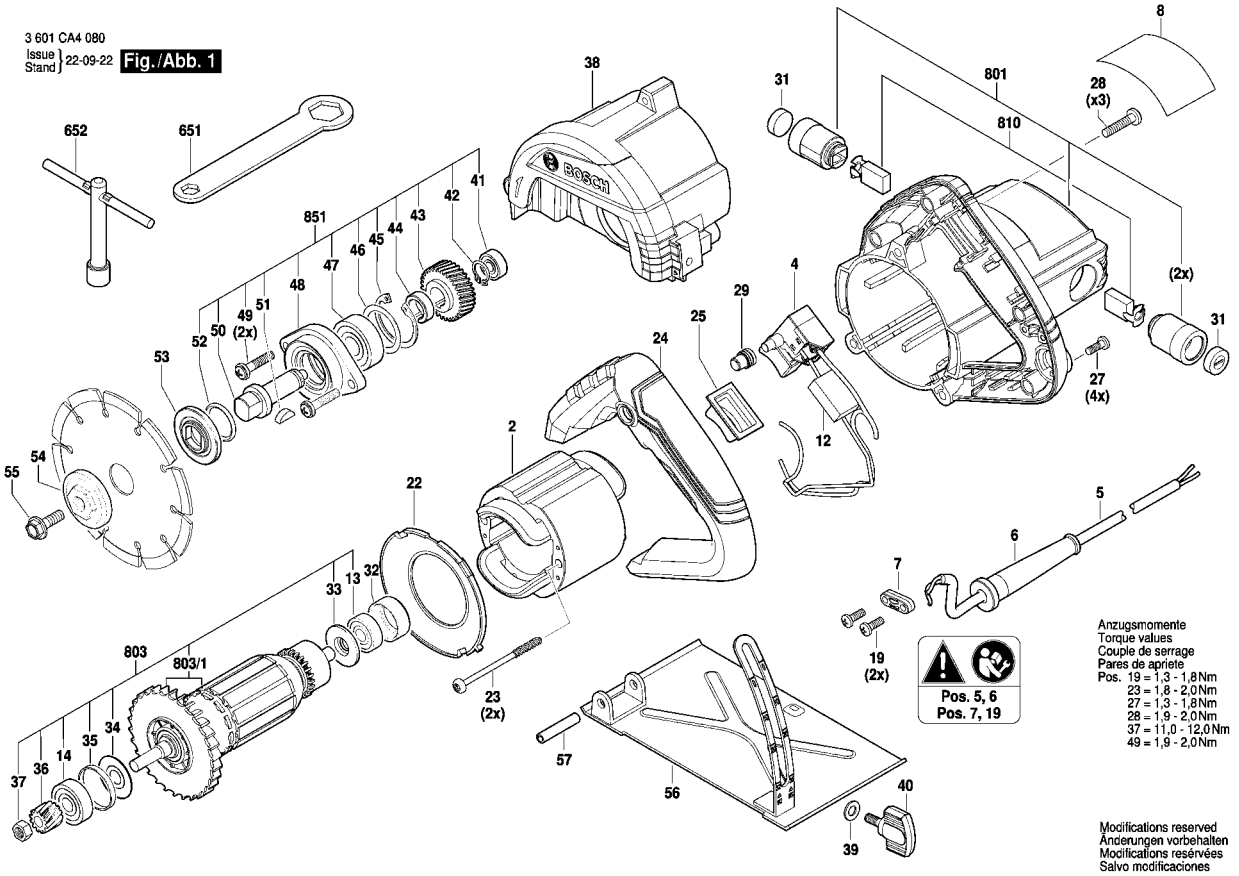

Model: 3 601 CA4 1F0 = 220 | Date:

Item	Pc	Order no.	Description	LP in INR
803/1	1	1 619 PB9 160	Armature assembly .	703,00
810	1	1 619 PB5 915	Carbon Brush .	86,00
851	1	1 619 PB7 287	spindle assembly .	505,00

Item	Pc	Order no.	Description	LP in INR

Please observe: Repairing, modifying and testing of electro-tools are to be performed professionally.The safety regulations according to IEC, EN, VDE, AFNOR and other regulations of the individual countries are to be observed. Subject to change.
This price list supersedes all previous edition. Prices are subjected to change without any prior notice.

BOSCH Power Tools	Hot Air Gun	Model GHG 180 3 601 J4D 0F0 | BO

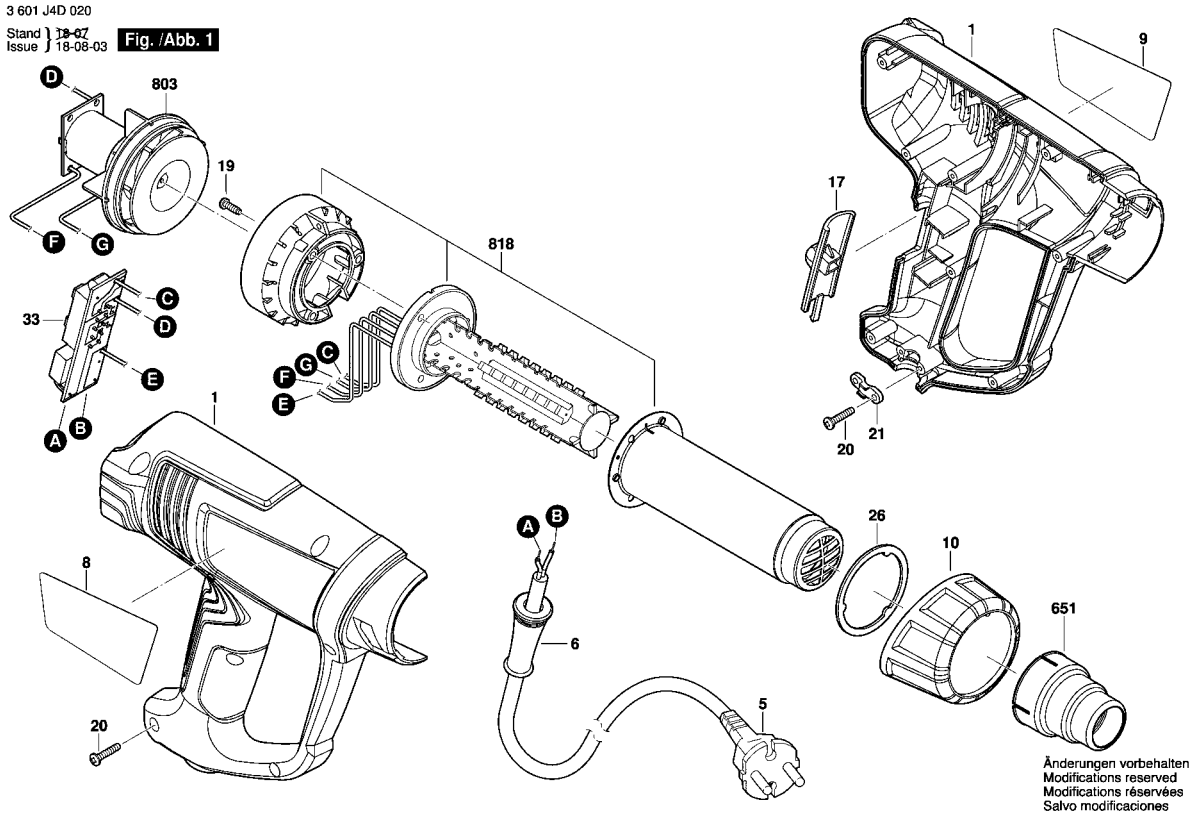

Model: 3 601 J4D 0F0 = 230 | Date:

Item	Pc	Order no.	Description	LP in INR
1	1	1 619 PB2 409	Housing Set .	444,00
5	1	1 619 PB5 390	Power supply cord .	
6	1	1 619 PB2 792	Grommet .	30,00
8	1	1 619 PB2 794	Nameplate .	
9	1	1 619 PB2 793	Manufacturer's nameplate	
10	1	1 619 PB2 411	Protective Tube .	116,00
17	1	1 619 PB2 412	Switch Slide .	53,00
19	3	1 619 PB2 799	Pan head screw .	52,00
20	7	1 619 PB2 800	Pan head screw .	52,00
21	1	1 619 PB2 801	Fastening Clamp .	52,00
26	1	1 619 PB2 807	Locating ring .	52,00
33	1	1 619 PB3 834	Switch Kit .	288,00
651	1	1 619 PB2 931	Hot air nozzle .	208,00
803	1	1 619 PB2 788	Motor .	687,00
818	1	1 619 PB2 798	Heating Element .	721,00

Please observe: Repairing, modifying and testing of electro-tools are to be performed professionally.The safety regulations according to IEC, EN, VDE, AFNOR and other regulations of the individual countries are to be observed. Subject to change.
This price list supersedes all previous edition. Prices are subjected to change without any prior notice.

BOSCH Power Tools	Hot Air Gun	Model GHG 20-60 3 601 BA6 400 | BO

3 601 BA6 400
Issue Stand 23-06-16 **Fig./Abb. 1**

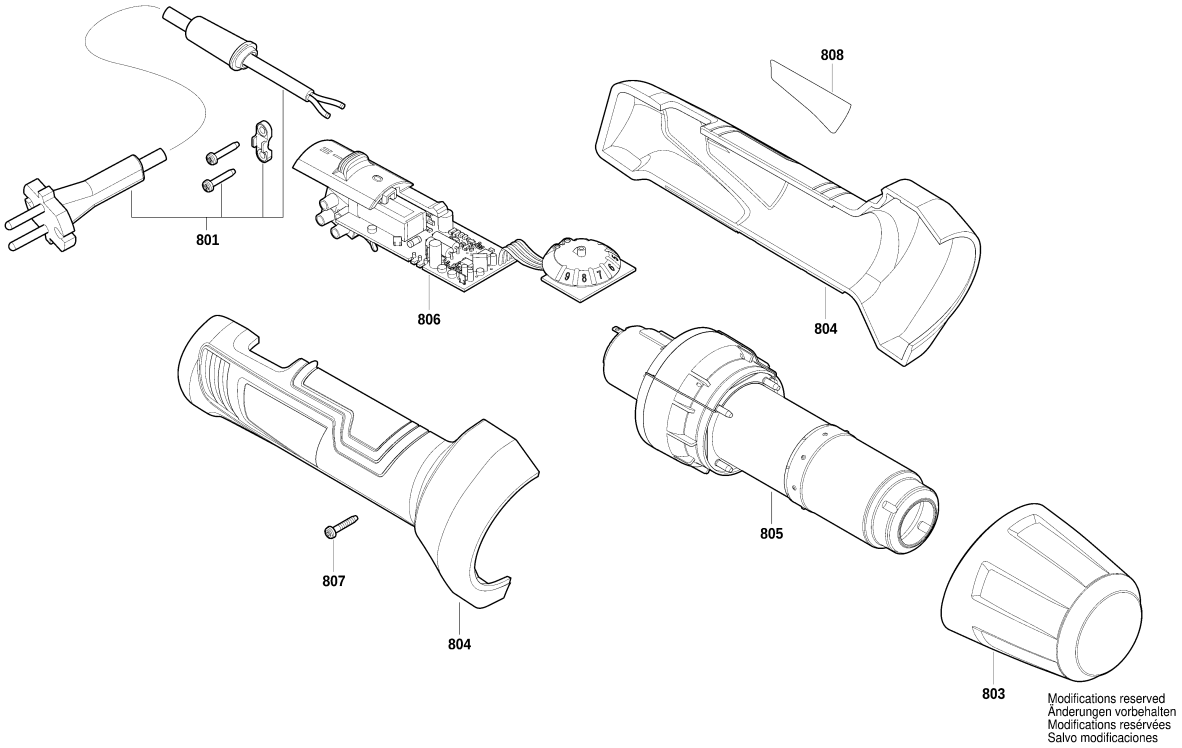

Model: 3 601 BA6 400 = 230 | Date:

Item	Pc	Order no.	Description	LP IN INR
801	1	1 607 000 CW0	Power supply cord .	1.398,00
803	1	1 607 000 D03	Protective Tube .	455,00
804	1	1 607 000 CZ9	Housing .	1.360,00
805	1	1 607 000 D2K	Heating Element .	3.047,00
806	1	1 607 000 D00	Printed Circuit Board .	2.686,00
807	1	1 607 000 CZ8	Screw .	44,00
808	1	1 607 000 D43	Nameplate .	

Item	Pc	Order no.	Description	LP IN INR

Please observe: Repairing, modifying and testing of electro-tools are to be performed professionally.The safety regulations according to IEC, EN, VDE, AFNOR and other regulations of the individual countries are to be observed. Subject to change.
This price list supersedes all previous edition. Prices are subjected to change without any prior notice.

BOSCH Power Tools	Hot Air Gun	Model GHG 20-63 FE 3 601 BA6 2K0 | BO

3 601 BA6 200
Issue / Stand 19-08-23 **Fig./Abb. 1**

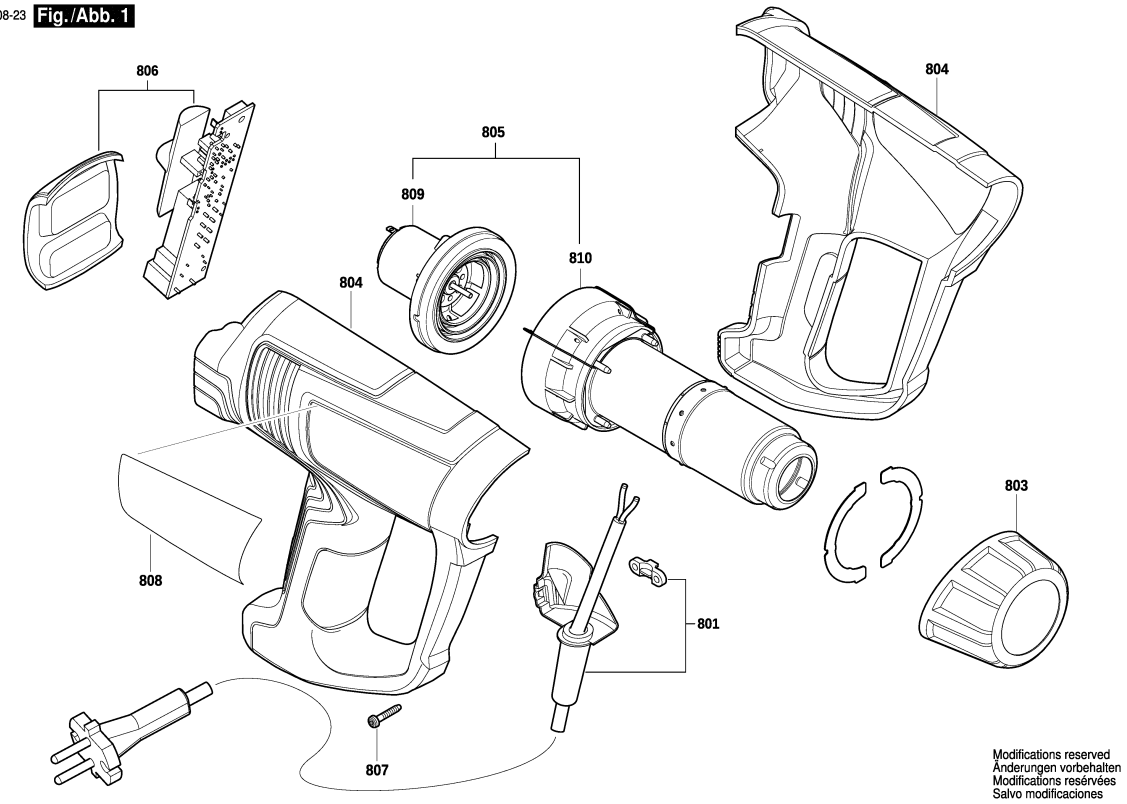

Model: 3 601 BA6 2K0 = 230 | Date:

Item	Pc	Order no.	Description	LP IN INR
801	1	1 607 000 CW0	Power supply cord .	1.398,00
803	1	1 607 000 D0H	Protective Tube .	333,00
804	1	1 607 000 D0C	Housing .	1.317,00
805	1	1 607 000 D1V	Motor .	3.133,00
806	1	1 607 000 D0D	Printed Circuit Board .	3.613,00
807	1	1 607 000 CW1	Screw .	30,00
808	1	1 607 000 D4A	Nameplate .	
809	1	1 600 A01 N64	Motor .	817,00
810	1	1 600 A01 N6C	Heating Element .	2.437,00

Item	Pc	Order no.	Description	LP IN INR

Please observe: Repairing, modifying and testing of electro-tools are to be performed professionally.The safety regulations according to IEC, EN, VDE, AFNOR and other regulations of the individual countries are to be observed. Subject to change.
This price list supersedes all previous edition. Prices are subjected to change without any prior notice.

BOSCH Power Tools	Blower	Model GBL 620 3 601 J80 5F0 | BO

3 601 J80 5F0
Issue J 18-04
Stand J 20-01-31

Fig. /Abb. 1

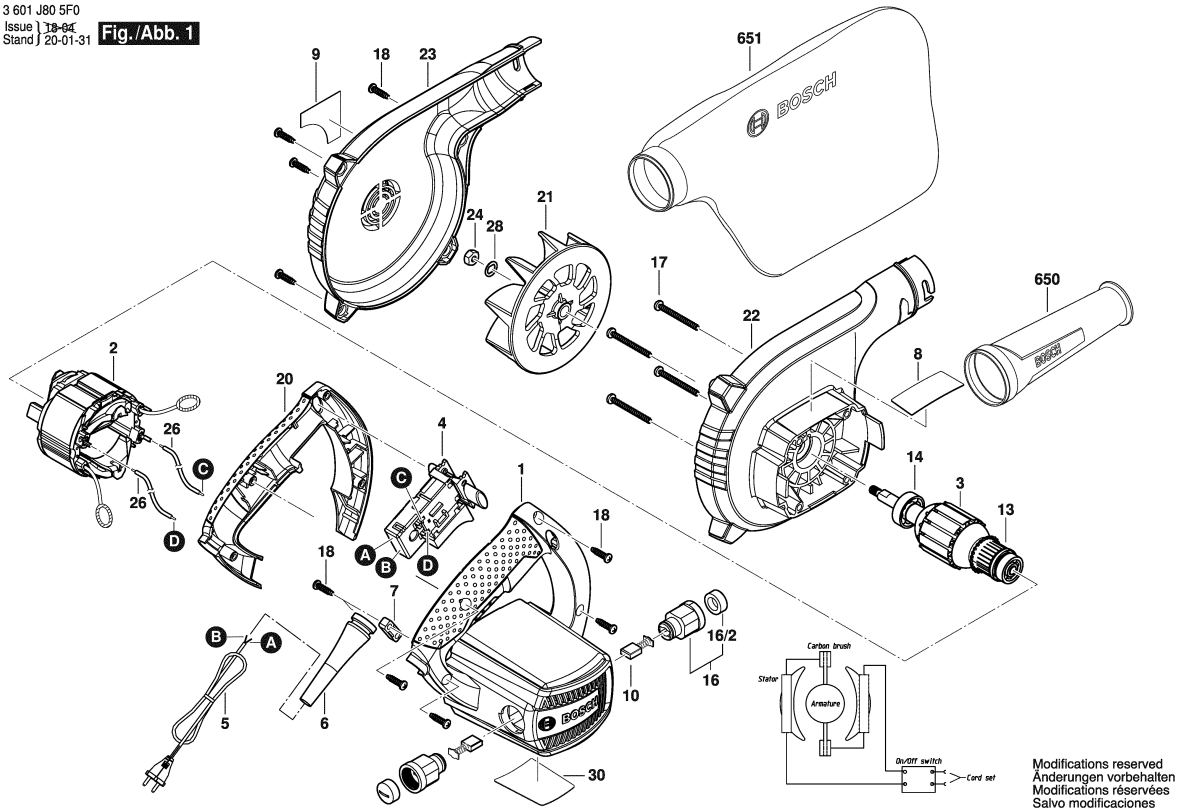

Model: 3 601 J80 5F0 = 230 | Date:

Item	Pc	Order no.	Description	LP IN INR
1	1	1 605 108 29C	Motor Housing .	226,00
2	1	1 604 220 56J	Field .	716,00
3	1	1 604 010 B92	Armature .	629,00
4	1	2 607 200 637	On-Off Switch .	253,00
5	1	1 604 460 264	Power supply cord EU	711,00
6	1	2 600 703 017	Grommet Ø6,4-Ø7,2x76	71,00
7	1	2 601 035 001	Cable Clip .	44,00
8	1	1 601 11A 5BY	Nameplate .	
9	1	1 601 11C 2A4	Label GBL 620 .	
10	1	1 604 321 129	Carbon Brush .	117,00
13	1	1 900 905 018	Ball Bearing 7x22x7 .	58,00
14	1	1 900 905 025	Ball Bearing 9x26x8 .	89,00
16/1	1	1 600 A00 187	Brush Holder .	139,00
16/2	1	1 600 A00 188	Brush Holder .	65,00
17	4	2 914 201 712	Screw 4x40MM .	31,00
18	10	F 002 G31 025	Screw .	31,00
20	1	1 605 132 15A	Handle .	91,00
21	1	1 606 610 16T	Fan .	112,00
22	1	1 600 A00 15N	Fan Housing .	213,00
23	1	1 600 A00 15P	Fan Cover .	156,00
24	1	1 613 300 006	Hex Nut M6 .	31,00
26	2	1 600 A00 FT2	Connecting Cable .	55,00
28	1	1 600 100 036	Cover Disc .	73,00
30	1	1 601 118 N89	Warning Plate .	0,00

Item	Pc	Order no.	Description	LP IN INR
650	1	1 605 190 265	Nozzle .	401,00
651	1	1 605 411 034	Dust Bag .	585,00

Please observe: Repairing, modifying and testing of electro-tools are to be performed professionally.The safety regulations according to IEC, EN, VDE, AFNOR and other regulations of the individual countries are to be observed. Subject to change.
This price list supersedes all previous edition. Prices are subjected to change without any prior notice.

BOSCH Power Tools	Hot Gun / Blower	Model GBL 650 3 601 JM4 0F0 | BO

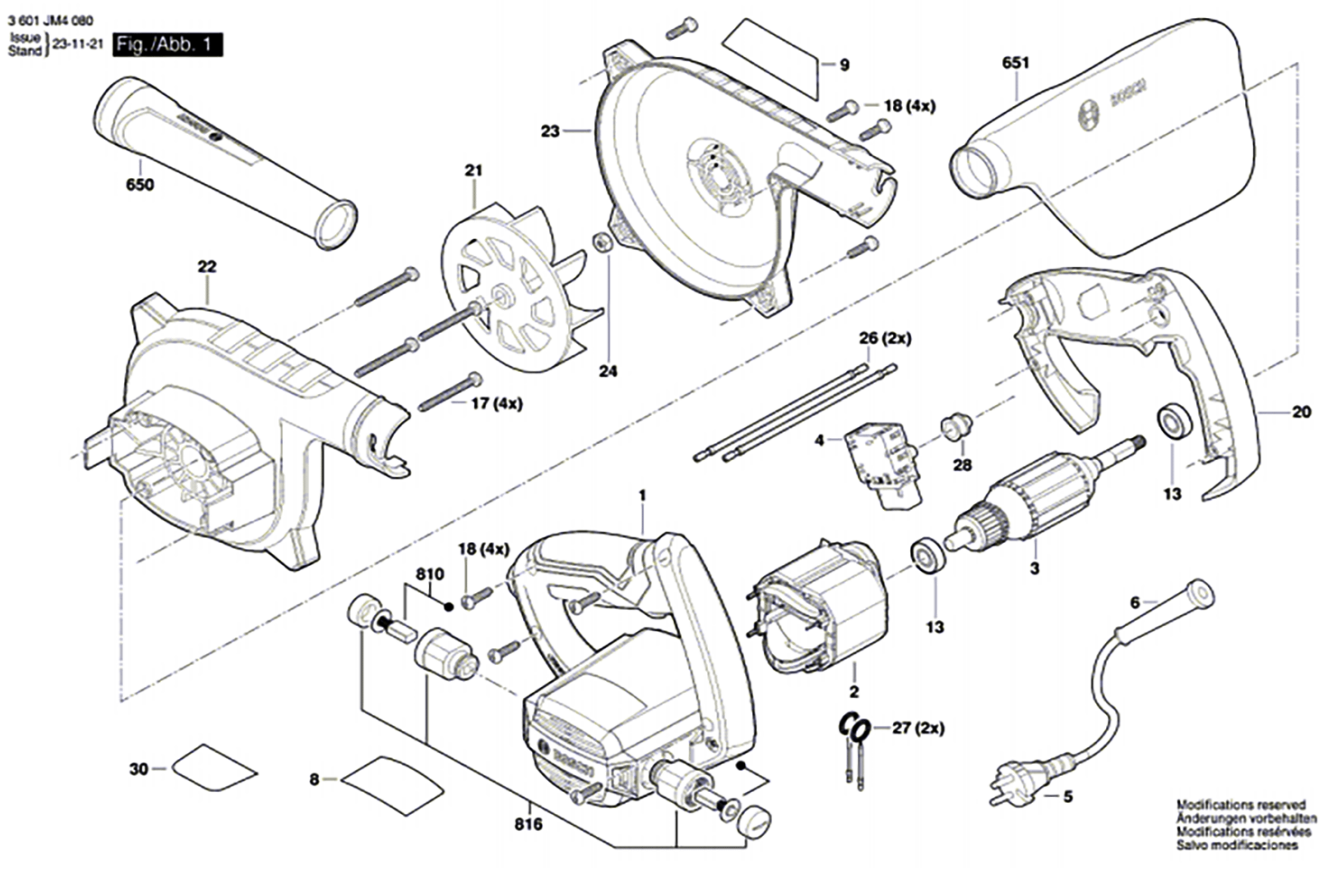

Model: 3 601 JM4 0F0 = 230 | Date:

Item	Pc	Order no.	Description	LP in INR	Item	Pc	Order no.	Description	LP in INR
1	1	1 605 108 2VM	Motor Housing .	177,00					
2	1	1 604 220 5BM	Field.	449,00					
3	1	1 604 010 BU3	Armature .	497,00					
4	1	1 607 200 39N	Switch	177,00					
5	1	1 604 460 75F	Power supply cord IND	287,00					
6	1	2 600 703 017	Grommet Ø6,4-Ø7,2x76 MM	70,00					
8	1	1 601 11A A7F	Nameplate.						
9	1	1 601 11C 5GG	Label GBL 650 .						
13	2	1 619 P06 024	Ball Bearing .	38,00					
17	4	2 914 201 712	Screw 4x40MM .	30,00					
18	8	F 002 G31 025	Screw.	30,00					
20	1	1 605 132 1AJ	Handle.	70,00					
21	1	1 606 610 19V	Fan .	74,00					
22	1	1 600 A02 U6T	Fan Housing.	171,00					
23	1	1 600 A02 U6U	Fan Cover .	124,00					
24	1	1 613 300 006	Hex Nut M6 .	30,00					
26	2	1 600 A02 U96	Connecting Cable.	25,00					
27	2	1 600 A02 U97	Spring Stretching Hook .	25,00					
28	1	1 619 P06 293	Protecting Cover .	33,00					
30	1	1 601 11A B89	Nameplate .						
650	1	1 605 190 265	Nozzle .	393,00					
651	1	1 605 411 034	Dust Bag .	574,00					
810	1	1 607 000 F68	Carbon-Brush Set .	100,00					
816	1	1 607 000 F69	Brush Holder .	85,00					

Please observe: Repairing, modifying and testing of electro-tools are to be performed professionally.The safety regulations according to IEC, EN, VDE, AFNOR and other regulations of the individual countries are to be observed. Subject to change.
This price list supersedes all previous edition. Prices are subjected to change without any prior notice.

BOSCH Power Tools	Blower	Model GBL 800E 3 601 J80 4F7 | BO

3 601 J80 4F1
Issue ~~18-04~~
Stand 20-01-31

Fig./Abb. 1

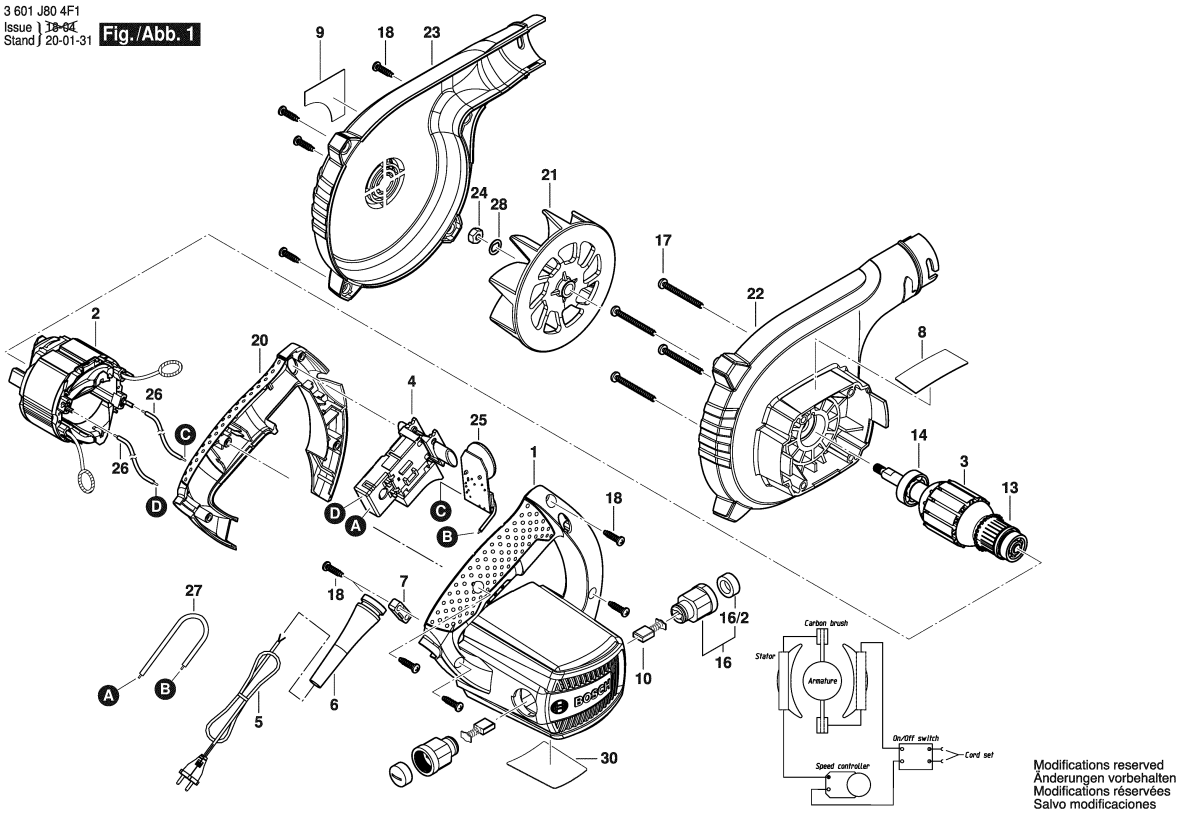

Model: 3 601 J80 4F7 = 230 | Date:

Item	Pc	Order no.	Description	LP IN INR
1	1	1 605 108 29B	Motor Housing .	304,00
2	1	1 604 220 439	Field 220-240V .	802,00
3	1	1 604 010 B1E	Armature 230V .	742,00
4	1	2 607 200 637	On-Off Switch .	253,00
5	1	1 604 460 287	Power supply cord I/BR	
6	1	2 600 703 017	Grommet Ø6,4-Ø7,2x76	71,00
7	1	2 601 035 001	Cable Clip .	44,00
10	1	1 604 321 129	Carbon Brush .	117,00
13	1	1 900 905 018	Ball Bearing 7x22x7 .	58,00
14	1	1 900 905 025	Ball Bearing 9x26x8 .	89,00
16	1	1 600 A00 187	Brush Holder .	139,00
16/2	1	F 002 G31 065	Insulating Cap .	30,00
17	4	2 914 201 712	Screw 4x40MM .	31,00
18	10	F 002 G31 025	Screw .	31,00
20	1	1 605 132 159	Handle .	143,00
21	1	1 606 610 156	Fan .	143,00
22	1	1 600 A00 15N	Fan Housing .	213,00
23	1	1 600 A00 15P	Fan Cover .	156,00
24	1	1 613 300 006	Hex Nut M6 .	31,00
25	1	1 607 233 593	Controller .	798,00
26	1	1 600 A00 FT2	Connecting Cable .	55,00
28	1	1 600 100 036	Cover Disc .	73,00
30	1	1 601 118 N89	Warning Plate .	
650	1	1 605 190 265	Nozzle .	401,00

Item	Pc	Order no.	Description	LP IN INR
651	1	1 605 411 034	Dust Bag .	585,00
653	1	1 619 PA9 088	Extension Tube .	257,00
654	1	1 619 PA9 089	Nozzle .	285,00
655	1	1 619 PA9 228	Flexible Connection .	397,00
656	1	1 619 PA9 087	Nozzle .	285,00
657	1	1 600 A01 595	Adapter .	139,00

Please observe: Repairing, modifying and testing of electro-tools are to be performed professionally.The safety regulations according to IEC, EN, VDE, AFNOR and other regulations of the individual countries are to be observed. Subject to change.
This price list supersedes all previous edition. Prices are subjected to change without any prior notice.

3 601 J80 4F1
Issue Stand 18-04-25 **Fig. /Abb. 2**

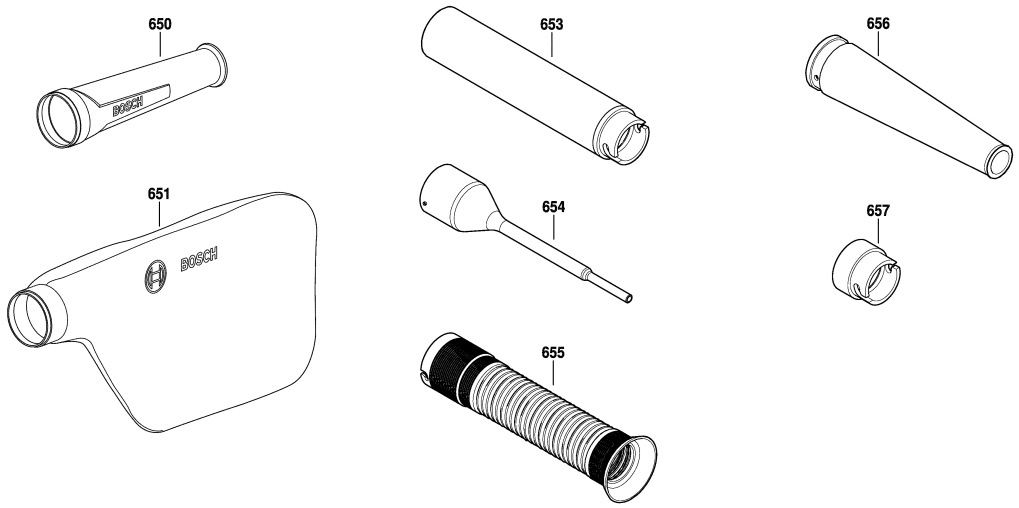

Änderungen vorbehalten
Modifications reserved
Modifications réservées
Salvo modificaciones

2 / 2

Model: 3 601 J80 4F7 = 230 | Date:

Item	Pc	Order no.	Description	LP IN INR	Item	Pc	Order no.	Description	LP IN INR

Please observe: Repairing, modifying and testing of electro-tools are to be performed professionally.The safety regulations according to IEC, EN, VDE, AFNOR and other regulations of the individual countries are to be observed. Subject to change.
This price list supersedes all previous edition. Prices are subjected to change without any prior notice.

BOSCH Power Tools	Blower	Model GBL 82-270 3 601 J80 4F7 | BO

3 601 J80 4F1
Issue ~~18-04~~
Stand 20-01-31

Fig./Abb. 1

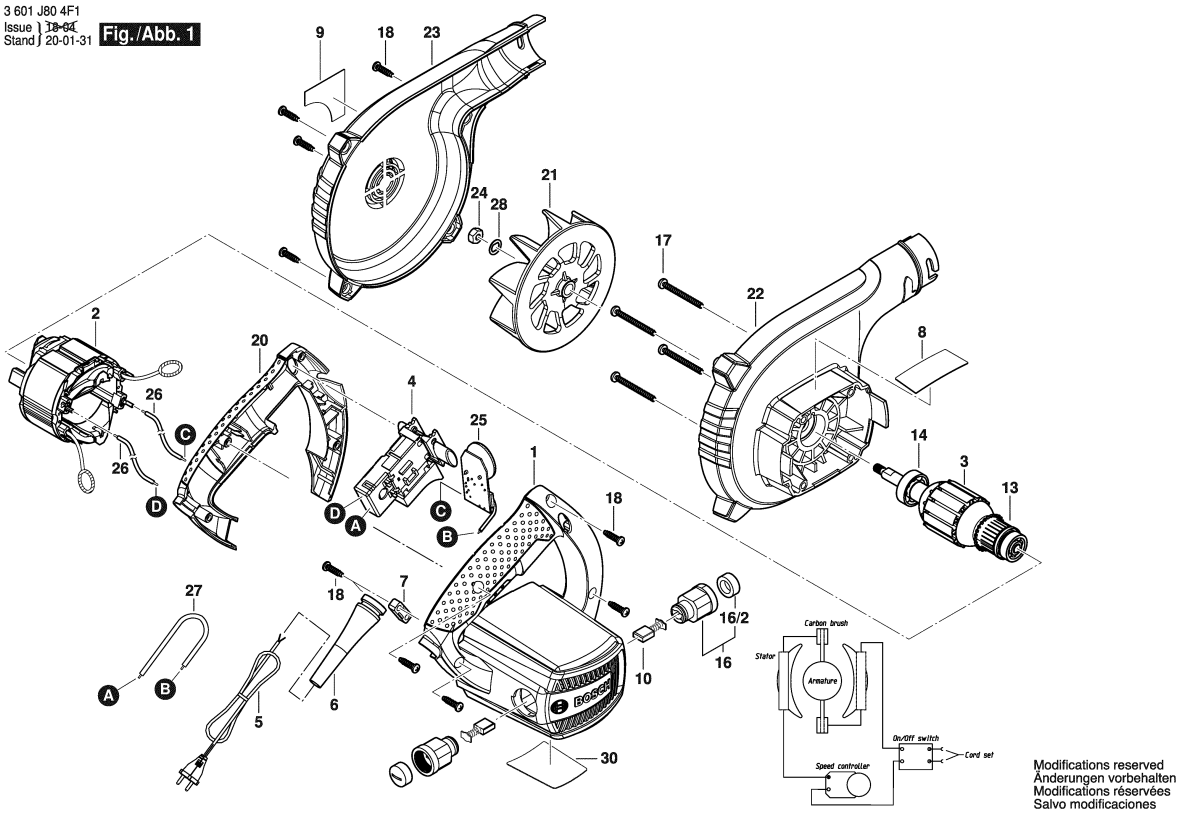

Model: 3 601 J80 4F7 = 230 | Date:

Item	Pc	Order no.	Description	LP IN INR
1	1	1 605 108 29B	Motor Housing .	304,00
2	1	1 604 220 439	Field 220-240V .	802,00
3	1	1 604 010 B1E	Armature 230V .	742,00
4	1	2 607 200 637	On-Off Switch .	253,00
5	1	1 604 460 287	Power supply cord I/BR	
6	1	2 600 703 017	Grommet Ø6,4-Ø7,2x76	71,00
7	1	2 601 035 001	Cable Clip .	44,00
10	1	1 604 321 129	Carbon Brush .	117,00
13	1	1 900 905 018	Ball Bearing 7x22x7 .	58,00
14	1	1 900 905 025	Ball Bearing 9x26x8 .	89,00
16	1	1 600 A00 187	Brush Holder .	139,00
16/2	1	F 002 G31 065	Insulating Cap .	30,00
17	4	2 914 201 712	Screw 4x40MM .	31,00
18	10	F 002 G31 025	Screw .	31,00
20	1	1 605 132 159	Handle .	143,00
21	1	1 606 610 156	Fan .	143,00
22	1	1 600 A00 15N	Fan Housing .	213,00
23	1	1 600 A00 15P	Fan Cover .	156,00
24	1	1 613 300 006	Hex Nut M6 .	31,00
25	1	1 607 233 593	Controller .	798,00
26	1	1 600 A00 FT2	Connecting Cable .	55,00
28	1	1 600 100 036	Cover Disc .	73,00
30	1	1 601 118 N89	Warning Plate .	
650	1	1 605 190 265	Nozzle .	401,00

Item	Pc	Order no.	Description	LP IN INR
651	1	1 605 411 034	Dust Bag .	585,00
653	1	1 619 PA9 088	Extension Tube .	257,00
654	1	1 619 PA9 089	Nozzle .	285,00
655	1	1 619 PA9 228	Flexible Connection .	397,00
656	1	1 619 PA9 087	Nozzle .	285,00
657	1	1 600 A01 595	Adapter .	139,00

Please observe: Repairing, modifying and testing of electro-tools are to be performed professionally.The safety regulations according to IEC, EN, VDE, AFNOR and other regulations of the individual countries are to be observed. Subject to change.
This price list supersedes all previous edition. Prices are subjected to change without any prior notice.

3 601 J80 4F1
Issue Stand } 18-04-25 **Fig. /Abb. 2**

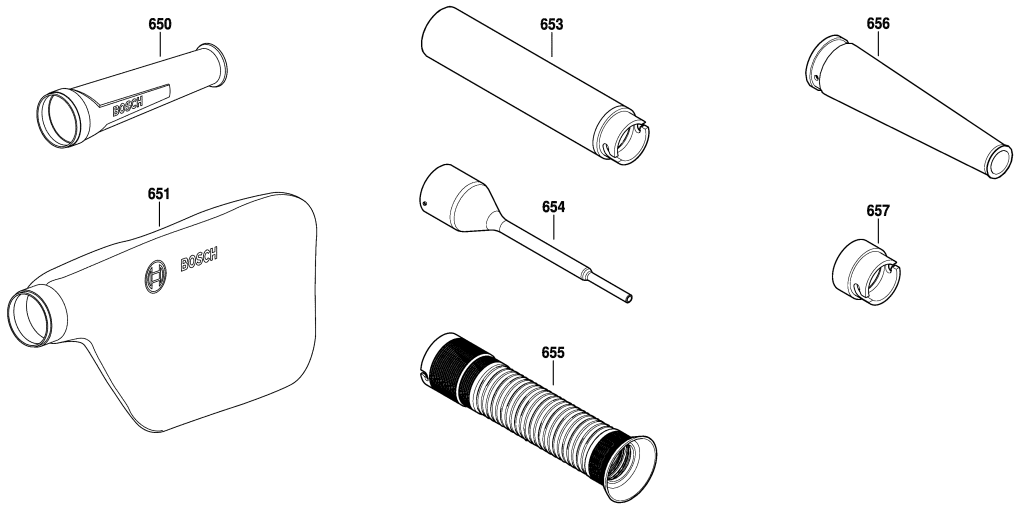

Änderungen vorbehalten
Modifications reserved
Modifications réservées
Salvo modificaciones

2 / 2

Model: 3 601 J80 4F7 = 230 | Date:

Item	Pc	Order no.	Description	LP IN INR	Item	Pc	Order no.	Description	LP IN INR

Please observe: Repairing, modifying and testing of electro-tools are to be performed professionally.The safety regulations according to IEC, EN, VDE, AFNOR and other regulations of the individual countries are to be observed. Subject to change.
This price list supersedes all previous edition. Prices are subjected to change without any prior notice.

BOSCH Power Tools	Portable Planer	Model GHO 6500 3 601 E96 0K0 | BO

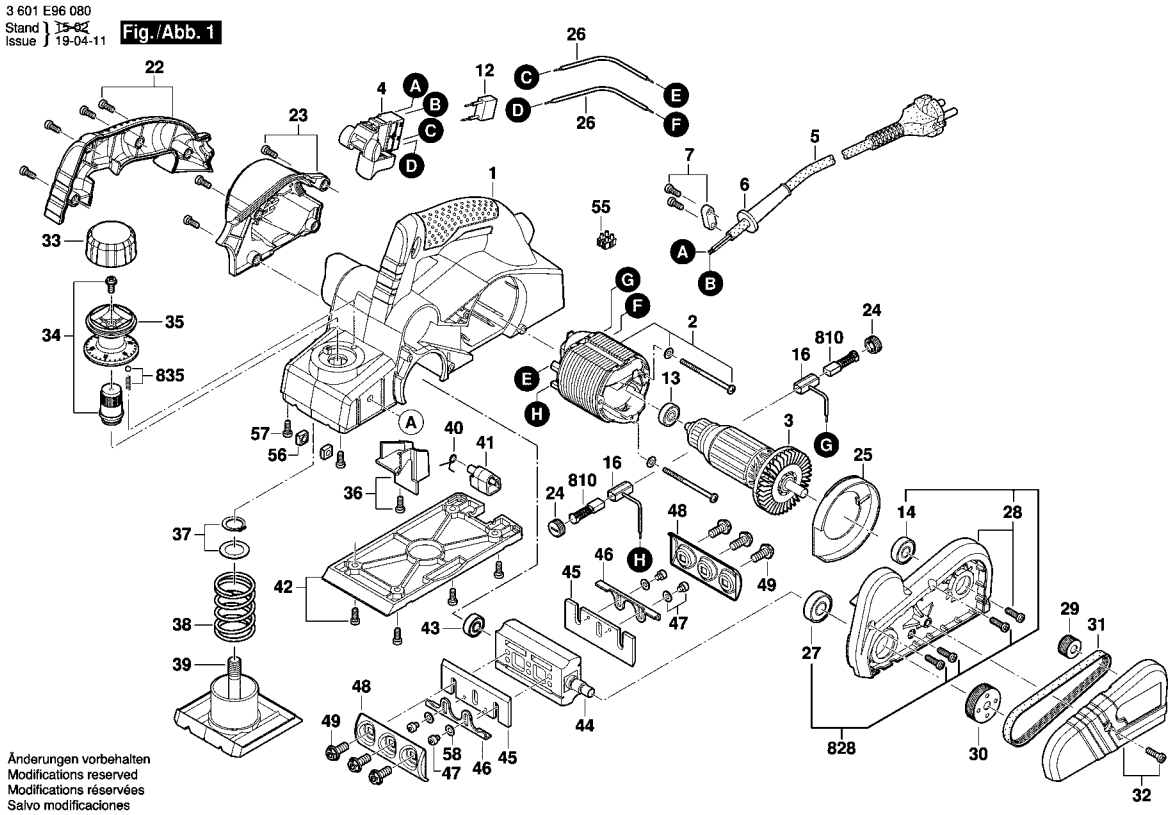

Model: 3 601 E96 0K0 = 230 | Date:

Item	Pc	Order no.	Description	LP in INR
1	1	1 619 PA7 989	Motor Housing .	895,00
2	1	1 619 PA7 991	Field 220-240V .	664,00
3	1	1 619 PA7 993	Armature 220-240V .	840,00
4	1	1 619 PA7 983	Switch Kit .	298,00
5	1	1 619 PA7 979	Power supply cord .	
6	1	1 619 PA8 026	Grommet .	37,00
7	1	1 619 PA7 982	Clamping Piece .	37,00
12	1	1 619 PA7 985	Suppression Capacitor .	92,00
13	1	1 619 PA7 994	groove ball bearing .	93,00
14	1	1 619 PA7 998	groove ball bearing .	93,00
16	2	1 619 PA7 995	Carbon Brush Holder .	93,00
22	1	1 619 PA7 986	Handle .	159,00
23	1	1 619 PA7 987	Cover .	181,00
24	2	1 619 PA7 988	Brush-Cover .	51,00
25	1	1 619 PA7 992	Air-Deflector Ring .	68,00
26	1	1 619 PA7 981	Connecting Cable .	42,00
27	1	1 619 PA7 999	groove ball bearing .	113,00
28	1	1 619 PA8 035	Bearing Flange .	439,00
29	1	1 619 PA8 000	Pulley .	97,00
30	1	1 619 PA8 001	Pulley .	97,00
31	1	1 619 PB5 920	V-Belt .	258,00
32	1	1 619 PA8 003	Gear Cover .	102,00
33	1	1 619 PA8 004	Cover .	68,00
34	1	1 619 PA8 006	Cap Nut .	67,00

Item	Pc	Order no.	Description	LP in INR
35	1	1 619 PA8 005	Adjustment Knob .	88,00
36	1	1 619 PA7 990	Cover .	69,00
37	1	1 619 PA8 007	Retaining snap ring .	39,00
38	1	1 619 PA8 008	Compression Spring .	51,00
39	1	1 619 PA8 009	Adjusting Plate .	354,00
40	1	1 619 PA8 011	Spring .	30,00
41	1	1 619 PA8 012	Knife Guard .	47,00
42	1	1 619 PA8 010	Base Plate .	453,00
43	1	2 600 905 051	groove ball bearing 7x19x6	193,00
44	1	1 619 PA8 013	Cutting Head .	684,00
45	2	2 609 110 357	Planing Knife .	213,00
46	2	2 602 316 001	Stop Holding Device .	59,00
47	4	2 603 433 001	Torx Oval-Head Screw .	47,00
48	2	2 609 110 064	Clamping jaws .	158,00
49	6	2 609 110 084	Straining Screw .	30,00
55	1	1 619 PA8 720	Socket .	30,00
56	2	2 603 320 004	Square Nut M6 .	50,00
57	1	1 619 PA8 722	Screw .	30,00
58	4	2 916 069 088	Spring Washer .	50,00
651	1	1 619 PA8 020	Guide Bracket .	450,00
652	1	2 607 970 002	Feeler Gauge .	143,00
653	2	2 607 950 025	Hexagon-Socket Key .	70,00
654	1	2 608 133 002	Blade Sharpening Device .	213,00
810	1	2 609 120 398	Carbon Brush .	271,00

Please observe: Repairing, modifying and testing of electro-tools are to be performed professionally.The safety regulations according to IEC, EN, VDE, AFNOR and other regulations of the individual countries are to be observed. Subject to change.
This price list supersedes all previous edition. Prices are subjected to change without any prior notice.

3 601 E96 080
Stand / Issue 15-01-20 **Fig. /Abb. 2**

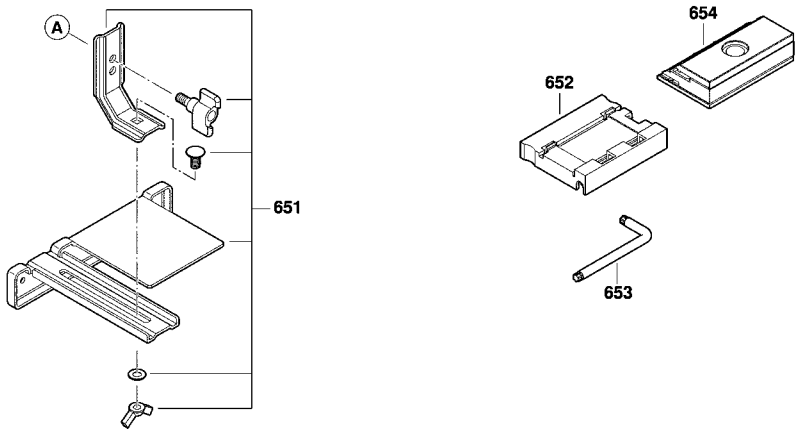

Änderungen vorbehalten
Modifications reserved
Modifications réservées
Salvo modificaciones

Model: 3 601 E96 0K0 = 230 | Date:

Item	Pc	Order no.	Description	LP in INR
828	1	1 619 PA7 997	Bearing Flange .	781,00
835	1	1 619 PB4 296	Spring .	29,00

Item	Pc	Order no.	Description	LP in INR

Please observe: Repairing, modifying and testing of electro-tools are to be performed professionally.The safety regulations according to IEC, EN, VDE, AFNOR and other regulations of the individual countries are to be observed. Subject to change.
This price list supersedes all previous edition. Prices are subjected to change without any prior notice.

BOSCH Power Tools	Portable Planer	Model GHO 10-82 0 601 594 060 | BO

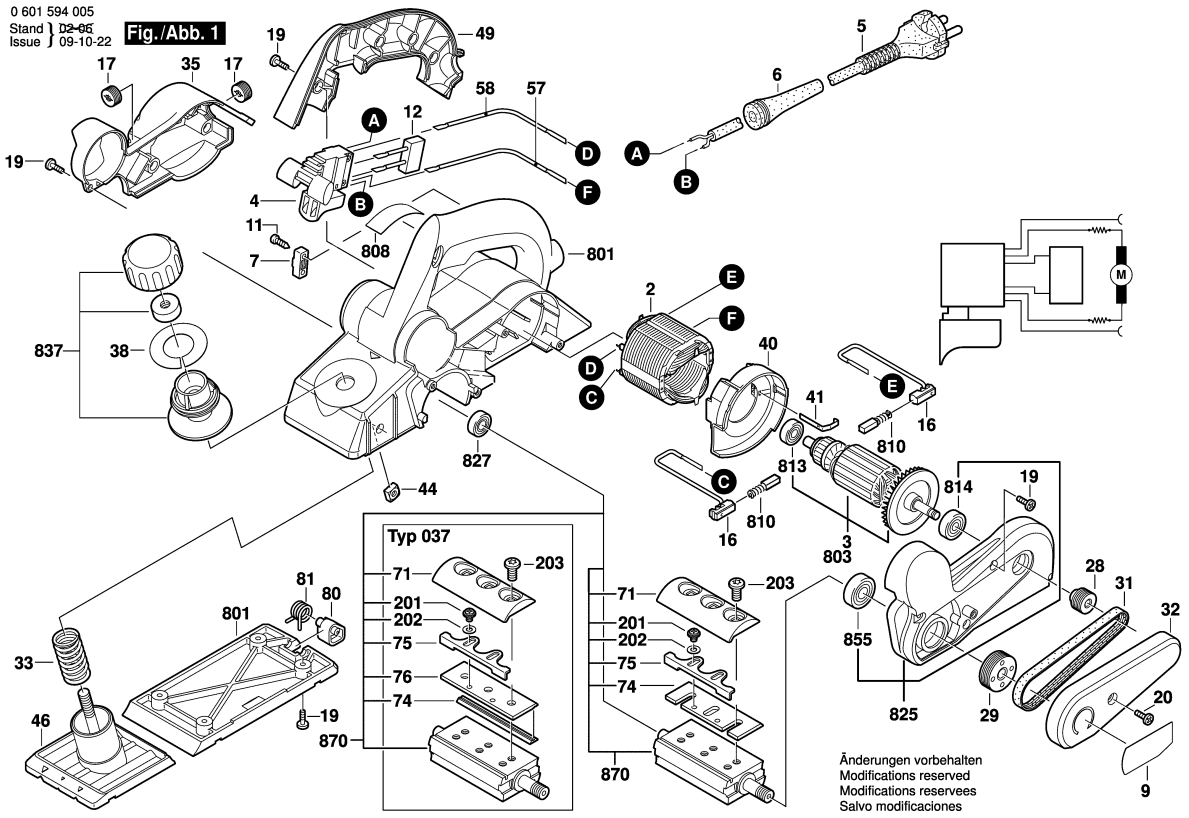

Model: 0 601 594 060 = 220 | Date:

Item	Pc	Order no.	Description	LP IN INR
2	1	2 604 220 480	Field 230-240V .	753,00
4	1	1 607 200 157	Switch .	246,00
5	1	1 604 460 264	Power supply cord EU	711,00
6	1	2 600 703 017	Grommet Ø6,4-Ø7,2x76	71,00
7	1	2 601 035 001	Cable Clip .	44,00
9	1	2 609 130 735	Manufacturer's nameplate .	
11	2	2 910 611 020	Tapping Screw DIN	44,00
16	2	2 604 449 055	Carbon Brush Holder .	59,00
17	2	2 609 100 087	Cover .	30,00
19	14	2 910 611 020	Tapping Screw DIN	44,00
20	1	2 609 110 155	Screw .	30,00
28	1	2 609 110 268	Pulley .	77,00
29	1	2 609 110 267	Pulley .	114,00
31	1	2 609 100 410	V-Belt .	246,00
32	1	2 609 100 024	Gear Cover .	96,00
33	1	2 609 110 077	Compression Spring .	71,00
35	1	2 609 100 132	Brush-Cover .	143,00
38	1	2 609 130 205	Sticker .	53,00
40	1	2 609 100 028	Air-Deflector Ring .	69,00
41	1	2 601 329 053	Contact Strap .	50,00
44	2	2 603 320 004	Square Nut M6 .	50,00
46	1	2 609 110 058	Adjusting Plate .	499,00
49	1	2 609 100 022	Handle Cover BLUE	210,00
57	1	2 604 448 181	Connecting Cable L=233	59,00

Item	Pc	Order no.	Description	LP IN INR
58	1	2 604 448 118	Connecting Cable L=213	48,00
71	2	2 609 110 064	Clamping jaws .	158,00
74	2	2 609 110 357	Planing Knife .	213,00
75	2	2 602 316 001	Stop Holding Device .	59,00
80	1	2 609 100 088	Knife Guard .	143,00
81	1	2 609 110 109	Spring .	58,00
201	4	2 603 433 001	Torx Oval-Head Screw .	47,00
202	4	2 916 069 088	Spring Washer .	50,00
203	6	2 609 110 084	Straining Screw .	30,00
654	1	2 607 950 025	Hexagon-Socket Key .	70,00
656	1	2 608 005 015	Stop Bracket .	338,00
682	1	2 608 133 002	Blade Sharpening Device .	213,00
683	1	2 607 970 002	Feeler Gauge .	143,00
801	1	2 609 100 141	Motor Housing BLUE	1.366,00
803	1	2 609 199 269	Armature 230-240V .	1.282,00
808	1	2 609 133 494	Nameplate .	
810	1	2 609 120 398	Carbon Brush .	271,00
813	1	2 600 905 051	groove ball bearing 7x19x6	193,00
814	1	2 600 905 052	groove ball bearing 8x22x7	214,00
825	1	2 609 110 174	Bearing Flange .	1.162,00
827	1	2 600 905 051	groove ball bearing 7x19x6	193,00
837	1	2 609 160 066	Adjusting Nut .	53,00
855	1	2 600 905 064	groove ball bearing	335,00
870	1	2 609 110 160	Planer Head .	2.702,00

Please observe: Repairing, modifying and testing of electro-tools are to be performed professionally.The safety regulations according to IEC, EN, VDE, AFNOR and other regulations of the individual countries are to be observed. Subject to change.
This price list supersedes all previous edition. Prices are subjected to change without any prior notice.

0 601 594 005
Stand / Issue } 20-06-04 **Fig. /Abb. 2**

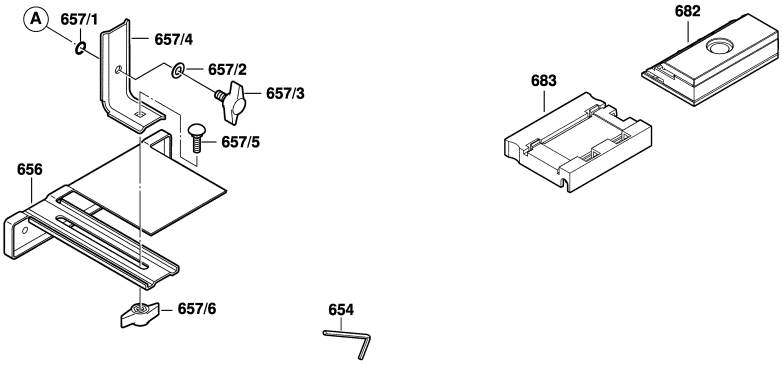

Änderungen vorbehalten
Modifications reserved
Modifications réservées
Salvo modificaciones

Model: 0 601 594 060 = 220 | Date:

Item	Pc	Order no.	Description	LP IN INR	Item	Pc	Order no.	Description	LP IN INR

Please observe: Repairing, modifying and testing of electro-tools are to be performed professionally.The safety regulations according to IEC, EN, VDE, AFNOR and other regulations of the individual countries are to be observed. Subject to change.
This price list supersedes all previous edition. Prices are subjected to change without any prior notice.

BOSCH Power Tools	Portable Planer	Model GHO 26-82 D 3 601 EA4 370 | BO

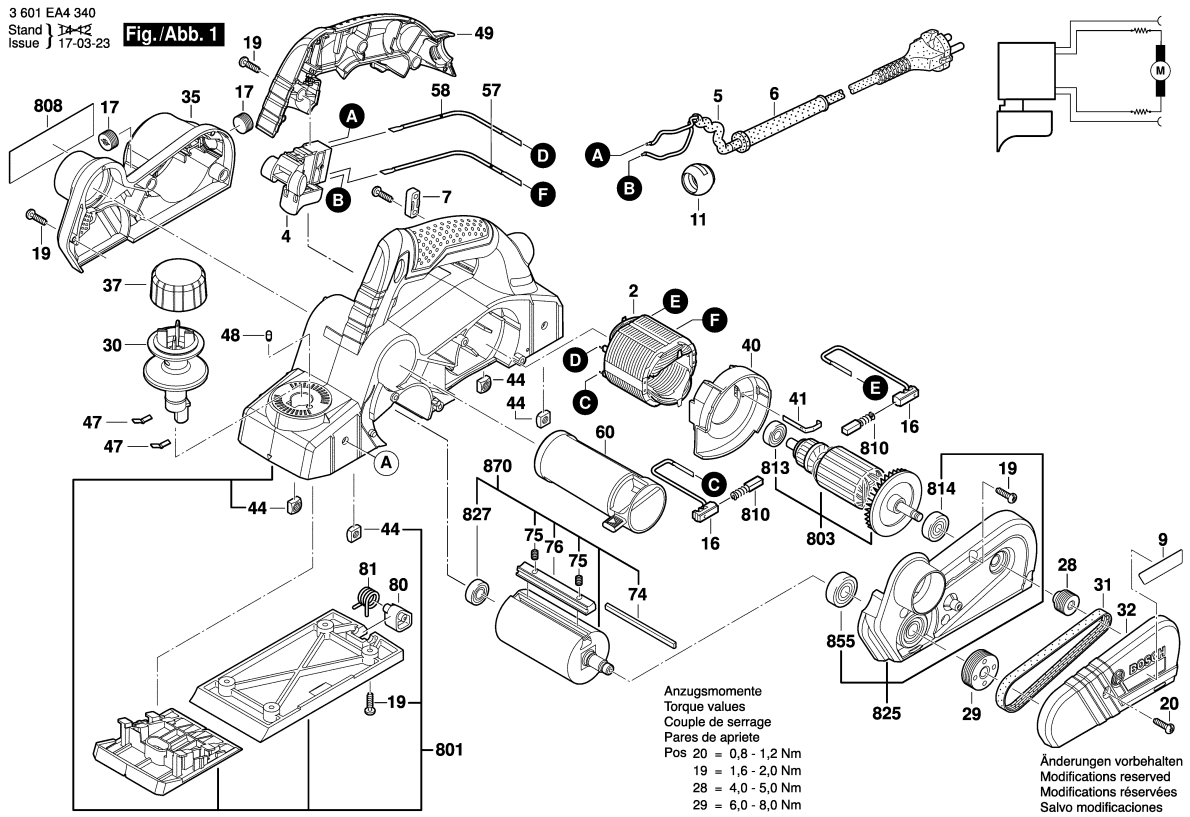

Model: 3 601 EA4 370 = 230 | Date:

Item	Pc	Order no.	Description	LP IN INR
2	1	2 604 220 480	Field 230-240V .	753,00
4	1	1 607 200 30F	Switch .	326,00
5	1	1 604 460 196	Power supply cord GB	
6	1	2 600 703 012	Grommet Ø6,5-Ø6,9x95	25,00
7	1	2 601 035 001	Cable Clip .	44,00
11	1	2 609 100 929	Ball Joint .	64,00
16	2	2 604 449 055	Carbon Brush Holder .	59,00
17	2	2 609 100 087	Cover .	30,00
19	16	2 603 490 022	Screw 4x16 .	30,00
20	1	2 609 112 128	Screw .	31,00
28	1	2 609 110 268	Pulley .	77,00
29	1	2 609 110 267	Pulley .	114,00
30	1	2 609 101 576	Rotary Knob .	206,00
31	1	2 609 100 410	V-Belt .	246,00
32	1	2 609 101 439	Belt Cover .	157,00
35	1	2 609 101 403	Brush-Cover .	291,00
37	1	2 609 101 440	Cap-Handle .	91,00
40	1	2 609 100 028	Air-Deflector Ring .	69,00
41	1	2 601 329 053	Contact Strap .	50,00
44	2	2 603 320 004	Square Nut M6 .	50,00
47	2	2 601 254 000	Ratchet Spring .	49,00
48	1	2 600 590 006	Ratchet Cap .	50,00
49	1	2 609 101 517	Handle Cover .	167,00
57	1	2 604 448 181	Connecting Cable L=233	59,00

Item	Pc	Order no.	Description	LP IN INR
58	1	2 604 448 118	Connecting Cable L=213	48,00
60	1	2 609 100 148	Deflector Pipe BLACK	431,00
74	1	2 608 635 341	Planing Knife .	405,00
75	2	2 603 400 016	Set screw .	47,00
76	1	2 603 111 001	Gripping Wedge .	423,00
80	1	2 609 100 088	Knife Guard .	143,00
81	1	2 609 110 109	Spring .	58,00
654	1	1 907 950 003	Offset Screwdriver DIN 911	31,00
655	1	2 609 170 013	Dust Bag .	1.436,00
656	1	2 608 005 015	Stop Bracket .	338,00
657/1	1	1 610 210 043	O-Ring 4,0x1,5 MM .	43,00
657/2	1	2 916 011 014	Plain Washer DIN 125-A	52,00
657/3	1	2 603 480 003	Wing Screw M 6x16 MM .	53,00
657/4	1	1 601 332 018	Stop Bracket .	97,00
657/5	1	2 910 281 201	Round-Head Bolt DIN	31,00
657/6	1	2 609 199 008	Wing Nut .	107,00
658	1	2 609 101 408	Adapter module .	95,00
801	1	2 609 199 975	Motor Housing .	1.368,00
803	1	2 609 199 946	Armature set 230-240V .	1.180,00
808	1	1 600 A00 Y95	Nameplate .	
810	1	2 609 120 637	Carbon-Brush Set .	175,00
813	1	2 600 905 051	groove ball bearing 7x19x6	193,00
814	1	2 600 905 052	groove ball bearing 8x22x7	214,00
825	1	2 609 199 949	Bearing Flange .	755,00

Please observe: Repairing, modifying and testing of electro-tools are to be performed professionally.The safety regulations according to IEC, EN, VDE, AFNOR and other regulations of the individual countries are to be observed. Subject to change.
This price list supersedes all previous edition. Prices are subjected to change without any prior notice.

3 601 EA4 340
Stand } ~~15-07~~
Issue } 17-03-24

Fig. /Abb. 2

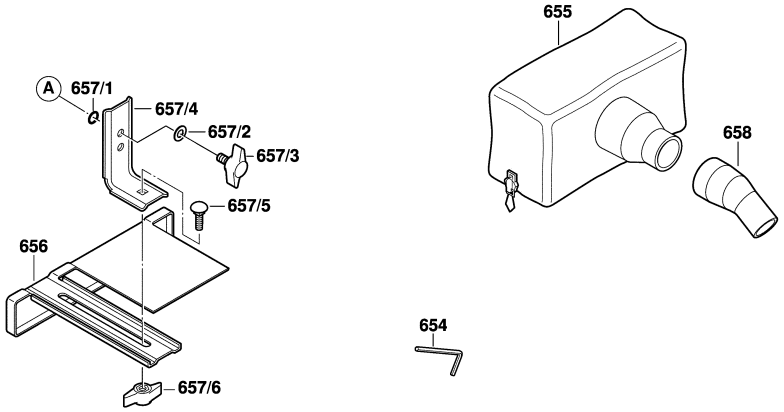

Änderungen vorbehalten
Modifications reserved
Modifications réservées
Salvo modificaciones

Model: 3 601 EA4 370 = 230 | Date:

Item	Pc	Order no.	Description	LP IN INR	Item	Pc	Order no.	Description	LP IN INR
827	1	2 600 905 051	groove ball bearing 7x19x6	193,00					
855	1	2 600 905 064	groove ball bearing	335,00					
870	1	2 609 110 193	Planer Head .	2.300,00					

Please observe: Repairing, modifying and testing of electro-tools are to be performed professionally.The safety regulations according to IEC, EN, VDE, AFNOR and other regulations of the individual countries are to be observed. Subject to change.
This price list supersedes all previous edition. Prices are subjected to change without any prior notice.

BOSCH Power Tools	Circular hand saw	Model GKS 140 3 601 FB3 0F0 | BO

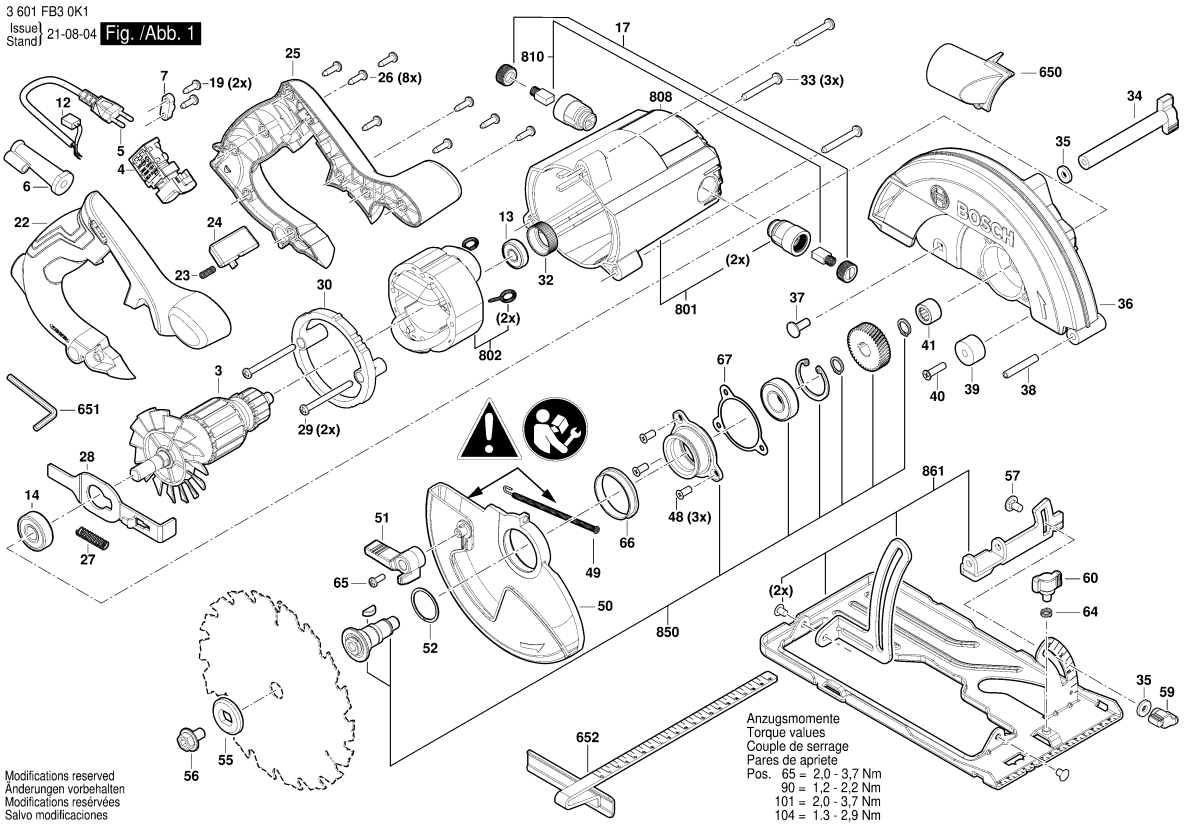

Model: 3 601 FB3 0F0 = 230 | Date:

Item	Pc	Order no.	Description	LP IN INR
3	1	1 604 010 B9J	Armature .	1.260,00
4	1	1 619 PB3 945	Switch .	281,00
5	1	1 619 PB4 777	Power supply cord .	
6	1	1 600 703 04F	Grommet .	48,00
7	1	1 600 A00 8RB	Fastening Clamp .	30,00
12	1	1 619 PB3 946	Suppression Filter .	69,00
13	1	1 600 A01 4HC	Bearing .	107,00
14	1	1 600 A01 4GF	Bearing .	150,00
17	1	1 605 500 2A8	Cover .	77,00
19	2	1 603 430 01F	Screw .	30,00
22	1	1 605 132 17U	Handle .	193,00
23	1	1 604 652 025	Spiral Spring .	30,00
24	1	1 600 A01 4F6	Button .	30,00
25	1	1 605 132 17V	Handle .	279,00
26	8	1 603 430 01G	Screw .	30,00
27	1	1 604 652 026	Spiral Spring .	30,00
28	1	1 600 A01 4FA	Guide Bracket .	65,00
29	2	1 603 430 01H	Screw .	30,00
30	1	1 600 591 06N	Air-Deflector Ring .	77,00
32	1	1 600 460 039	Bearing Sleeve .	30,00
33	3	1 603 430 01J	Screw .	30,00
34	1	1 600 A01 4FM	Shift-Lever Knob .	30,00
35	2	1 600 A00 8RH	Washer .	30,00
36	1	1 619 PB6 389	Upper guard .	1.107,00

Item	Pc	Order no.	Description	LP IN INR
37	1	1 600 A00 8RK	Bolt .	48,00
38	1	1 604 652 02A	Spiral Spring .	65,00
39	1	1 600 A00 8SA	Rubber Base .	107,00
40	1	1 603 430 01K	Screw .	30,00
41	1	1 600 A00 8RL	groove ball bearing .	121,00
48	3	1 603 430 01L	Screw .	30,00
49	1	1 604 652 02M	Spiral Spring .	30,00
50	1	1 600 A01 4FF	Lower guard .	560,00
51	1	1 600 A01 4FE	Lever .	30,00
52	1	1 600 A00 8RT	Loop .	65,00
55	1	1 600 A00 8RV	Flange .	209,00
56	1	1 619 PB4 471	Screw .	99,00
57	1	1 600 A00 8RZ	Bolt .	30,00
59	1	1 600 A01 4FR	Knob .	30,00
60	1	1 600 A01 4FS	Knob .	30,00
64	1	1 604 652 028	Spiral Spring .	30,00
65	1	1 603 430 01N	Screw .	30,00
66	1	1 600 A01 4FT	Washer .	30,00
67	1	1 600 A01 78V	Sealing Plate .	30,00
650	1	1 619 PB6 988	Vacuum Adapter .	
651	1	1 600 A00 8S7	Hexagon Socket Wrench .	112,00
652	1	1 600 A01 4HJ	Guide .	77,00
801	1	1 619 PB4 034	Motor Housing .	671,00
802	1	1 607 000 D17	Field .	719,00

Please observe: Repairing, modifying and testing of electro-tools are to be performed professionally.The safety regulations according to IEC, EN, VDE, AFNOR and other regulations of the individual countries are to be observed. Subject to change.
This price list supersedes all previous edition. Prices are subjected to change without any prior notice.

BOSCH Power Tools	Circular hand saw	Model GKS 140 3 601 FB3 0F0 | BO

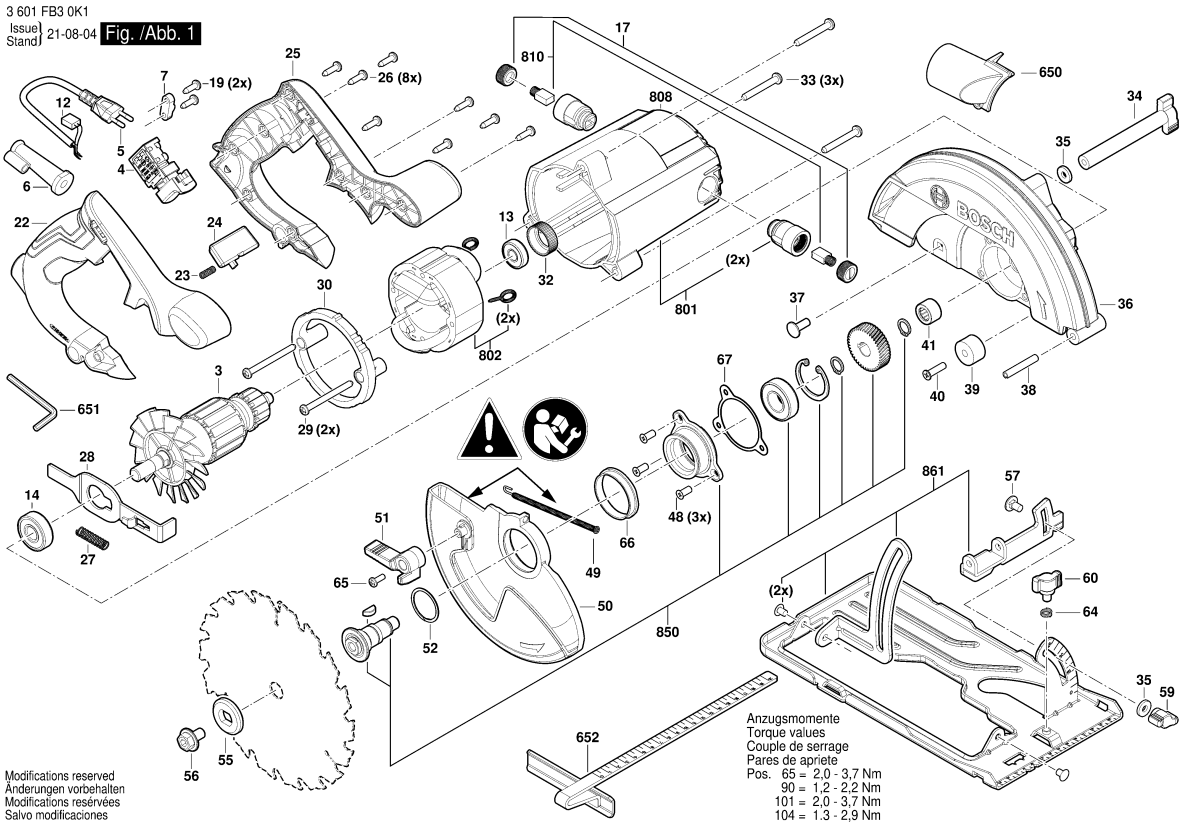

Model: 3 601 FB3 0F0 = 230 | Date:

Item	Pc	Order no.	Description	LP IN INR	Item	Pc	Order no.	Description	LP IN INR
808	1	1 619 PB4 779	Nameplate .						
810	1	1 619 PB4 042	Carbon-Brush Set .	268,00					
850	1	1 619 PB4 036	Gear .	583,00					
861	1	1 619 PB4 035	Base Plate .	628,00					

Please observe: Repairing, modifying and testing of electro-tools are to be performed professionally.The safety regulations according to IEC, EN, VDE, AFNOR and other regulations of the individual countries are to be observed. Subject to change.
This price list supersedes all previous edition. Prices are subjected to change without any prior notice.

BOSCH Power Tools	Circular hand saw	Model GKS 190 3 601 F23 0K0 | BO

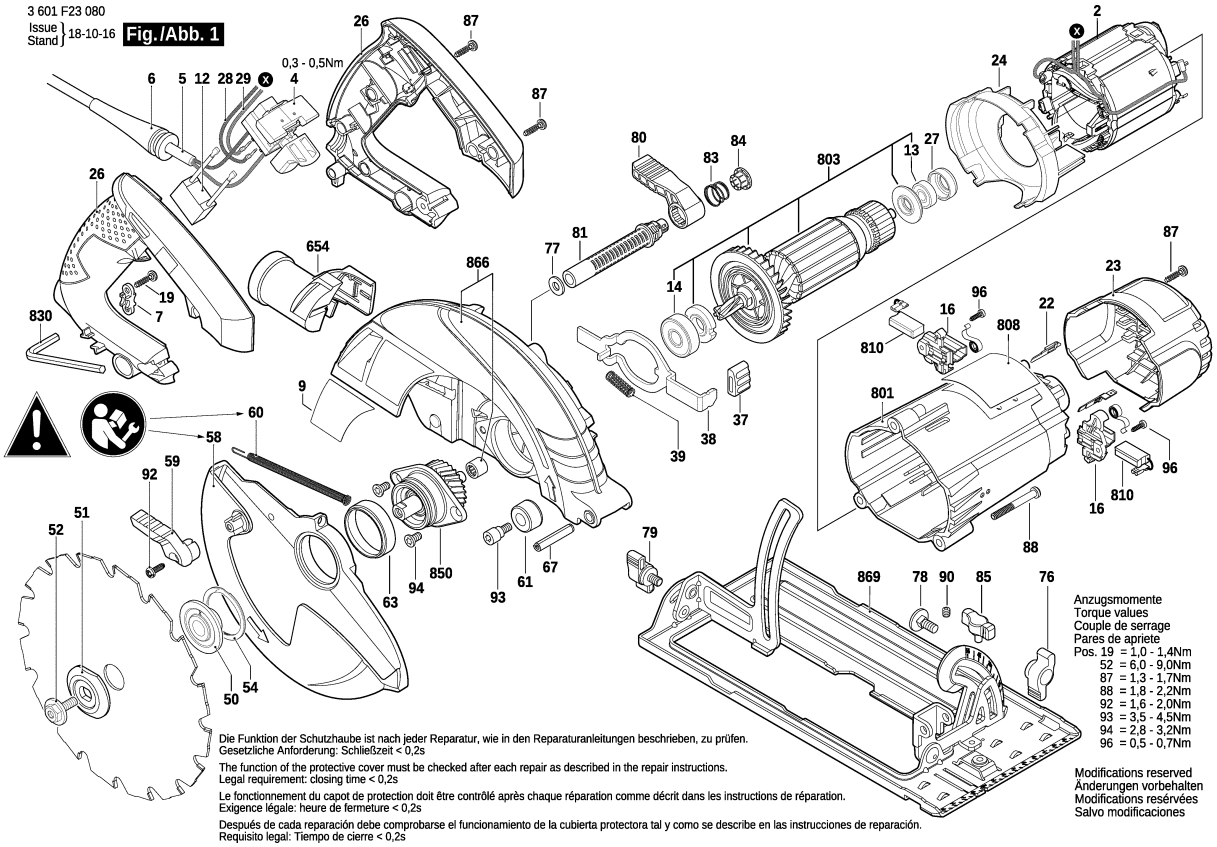

Model: 3 601 F23 0K0 = 230 | Date:

Item	Pc	Order no.	Description	LP IN INR
2	1	1 619 P04 474	Field 230V .	1.230,00
4	1	1 619 P06 206	Switch .	470,00
5	1	2 604 460 277	Power supply cord I/BR	1.384,00
6	1	2 600 703 017	Grommet Ø6,4-Ø7,2x76	71,00
7	1	1 619 P06 313	Cable Clip .	30,00
9	1	1 619 P31 104	Manufacturer's nameplate .	
13	1	1 619 P00 456	Ball Bearing 7x19x6 MM .	58,00
14	1	1 619 P06 374	Bearing Cover Plate .	223,00
16	2	1 619 P13 417	Brush Holder .	68,00
19	2	2 603 490 021	Torx Oval-Head Screw	30,00
22	2	1 619 P06 213	Right Angle Plug .	30,00
23	1	1 619 P06 218	End cap BLACK	225,00
24	1	1 619 P06 219	Baffle .	45,00
26	1	1 619 P06 220	Set Of Handles .	640,00
27	1	1 619 P06 227	Rubber Ring .	30,00
28	1	1 619 P15 969	Wire .	57,00
29	1	1 619 P15 970	Wire .	57,00
37	1	1 619 P06 225	Cap .	30,00
38	1	1 619 P06 226	Guide Bracket .	125,00
39	1	1 619 P01 642	Compression Spring .	62,00
50	1	1 619 P06 230	Washer .	159,00
51	1	1 619 P06 231	Locking Washer .	211,00
52	1	1 619 P06 232	Screw .	62,00
54	1	1 619 P06 238	Locking Washer .	30,00

Item	Pc	Order no.	Description	LP IN INR
58	1	1 600 A00 XZ6	Pivoting Blade Guard .	782,00
59	1	1 619 P06 235	Lever .	48,00
60	1	1 619 P06 334	Extension Spring .	87,00
61	1	1 619 P06 236	Bumper BLACK	30,00
63	1	1 619 P06 237	Flange Bushing .	30,00
67	1	2 917 800 253	Coiled Spring Pin DIN ISO	48,00
76	1	1 619 P06 244	Wing Nut .	48,00
77	1	2 916 011 014	Plain Washer DIN 125-A	52,00
78	1	1 619 P06 211	Round-Head Bolt .	30,00
79	1	1 619 P06 316	Wing Screw .	48,00
80	1	1 619 P06 245	Lever .	99,00
81	1	1 619 P07 620	Adjustment rod .	161,00
83	1	1 619 X01 792	Spring BLACK	30,00
84	1	1 619 P17 212	Cover .	56,00
85	1	1 619 P01 618	Wing Screw BLACK	30,00
87	8	2 603 490 022	Screw 4x16 .	30,00
88	3	2 610 925 864	Screw .	30,00
90	1	1 619 P04 540	Adjusting Screw BLACK	30,00
92	1	1 619 P01 678	Screw .	30,00
93	1	1 619 P06 246	Screw .	30,00
94	2	2 610 924 687	Countersunk-Head Screw .	30,00
96	2	1 619 P06 252	Torx Oval-Head Screw .	30,00
654	1	1 619 P06 204	Vacuum Adapter .	100,00
801	1	1 619 P06 372	Motor Housing BLUE	711,00

Please observe: Repairing, modifying and testing of electro-tools are to be performed professionally.The safety regulations according to IEC, EN, VDE, AFNOR and other regulations of the individual countries are to be observed. Subject to change.
This price list supersedes all previous edition. Prices are subjected to change without any prior notice.

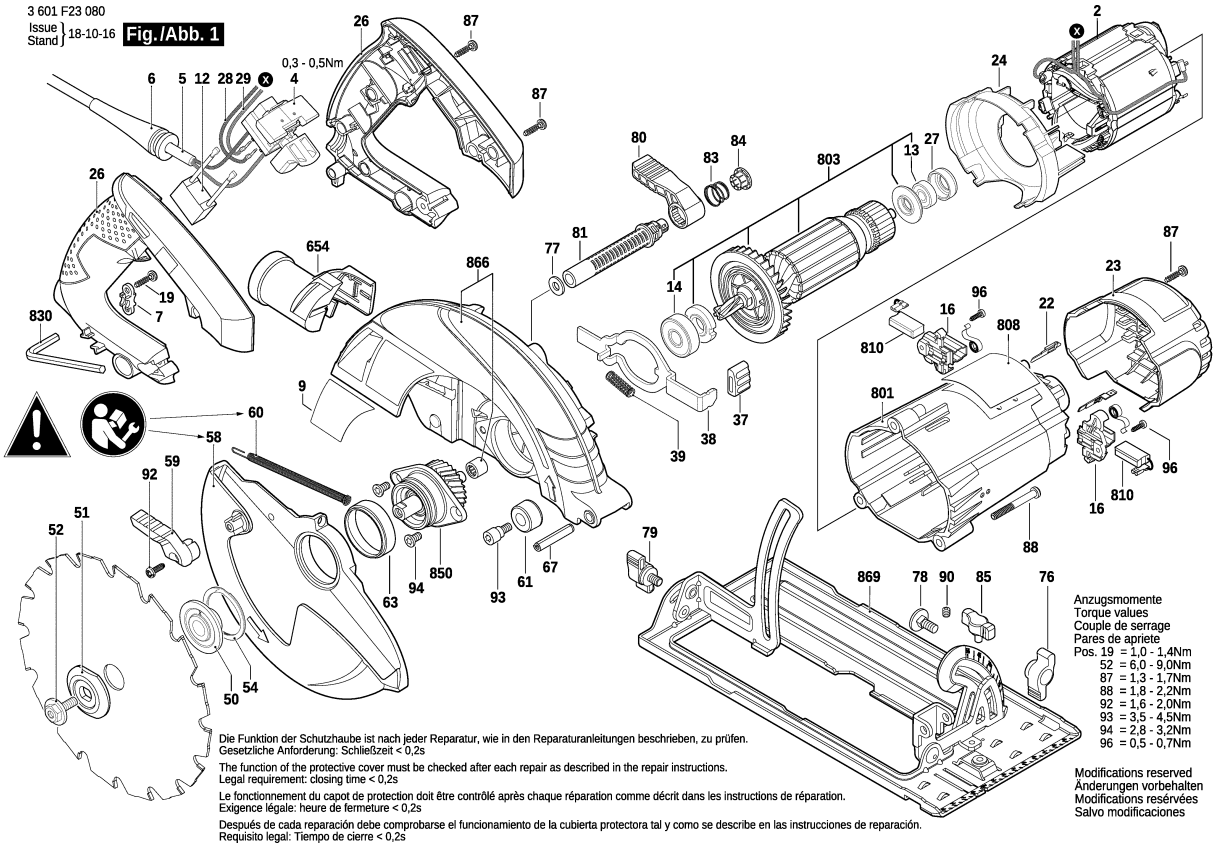

Model: 3 601 F23 0K0 = 230 | Date:

Item	Pc	Order no.	Description	LP IN INR
803	1	1 619 P06 345	Armature set 230V .	2.331,00
808	1	1 619 P06 380	Nameplate .	68,00
810	1	1 619 P06 346	Carbon-Brush Set .	367,00
830	1	1 619 P14 506	Offset Screwdriver .	30,00
850	1	1 619 P06 392	Gear .	1.106,00
866	1	1 619 P07 286	Protective Cover .	1.424,00
869	1	1 619 P06 391	Base Plate .	1.567,00

Item	Pc	Order no.	Description	LP IN INR

Please observe: Repairing, modifying and testing of electro-tools are to be performed professionally.The safety regulations according to IEC, EN, VDE, AFNOR and other regulations of the individual countries are to be observed. Subject to change.
This price list supersedes all previous edition. Prices are subjected to change without any prior notice.

BOSCH Power Tools	Circular hand saw	Model GKS 235 Turbo 3 601 EA2 0F0 | BO

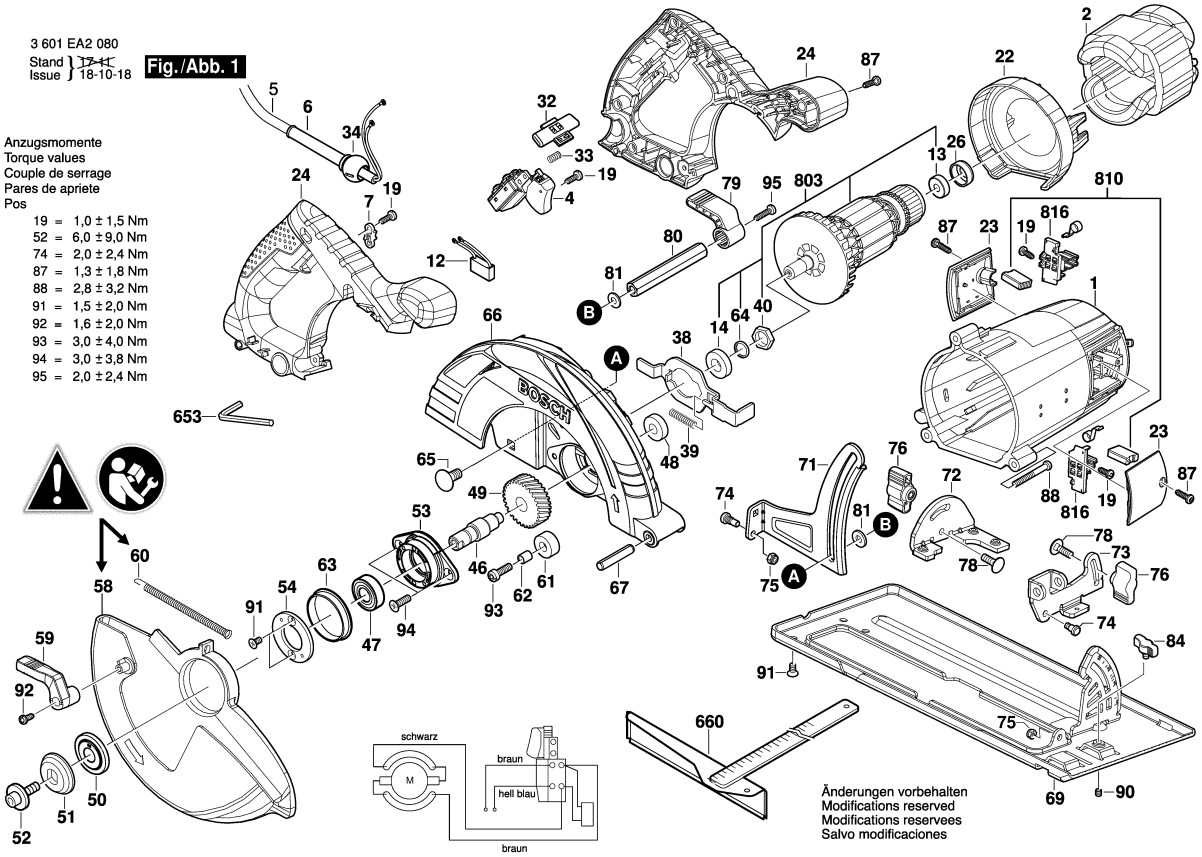

1 / 2

Model: 3 601 EA2 0F0 = 220	Date:

Item	Pc	Order no.	Description	LP IN INR
1	1	1 619 P10 219	Motor Housing .	756,00
2	1	1 619 P08 335	Field 230V .	2.209,00
4	1	1 607 200 286	Switch .	753,00
5	1	1 619 P02 327	Power supply cord .	
6	1	2 600 703 013	Grommet Ø7,6-Ø8,2x95	68,00
7	1	1 619 P01 104	Cable Clip .	30,00
12	1	1 619 P01 137	Suppression Filter .	158,00
13	1	2 610 017 348	groove ball bearing .	122,00
14	1	1 619 P06 095	groove ball bearing .	121,00
19	5	2 603 490 021	Torx Oval-Head Screw	30,00
22	1	1 619 P10 224	Baffle .	72,00
23	2	1 618 B00 802	Sealing cap .	34,00
24	1	1 619 P10 220	Set Of Handles .	839,00
26	1	1 600 206 030	Rubber Ring .	46,00
32	1	1 619 P01 157	Change-Over Switch RED	42,00
33	1	2 610 935 251	Compression Spring .	41,00
34	1	1 619 P01 637	Strain-Relief Clamp .	30,00
38	1	1 619 P01 620	Guide Bracket .	111,00
39	1	1 619 P01 642	Compression Spring .	62,00
40	1	1 619 P10 226	Bushing .	84,00
46	1	1 619 P01 623	Shaft .	359,00
47	1	1 900 905 279	groove ball bearing	319,00
48	1	1 900 905 173	groove ball bearing	104,00
49	1	1 619 P10 221	Gear .	699,00

Item	Pc	Order no.	Description	LP IN INR
51	1	1 619 P01 626	Locking Washer .	99,00
52	1	1 619 P01 634	Clamp Screw .	43,00
53	1	1 619 P01 628	Bearing Flange .	328,00
54	1	1 619 P01 629	Retaining Plate .	52,00
58	1	1 600 A00 XZ2	Pivoting Blade Guard .	603,00
59	1	1 619 P01 631	Lever .	62,00
60	1	1 619 P01 632	Extension Spring .	65,00
61	1	1 619 P01 633	Bumper .	31,00
62	1	1 619 P02 580	Spacer Tube .	38,00
63	1	1 619 P01 635	Flange Bushing .	43,00
64	1	1 619 P10 650	Washer .	52,00
65	1	1 619 P06 522	Stud bolt .	43,00
66	1	1 619 P10 222	Protective Guard .	2.211,00
67	1	2 917 780 185	Slotted Spring Pin DIN	69,00
69	1	1 619 P10 227	Base Plate .	1.770,00
71	1	1 619 P10 230	Depth-Gauge .	165,00
72	1	1 619 P10 228	Support bracket .	141,00
73	1	1 619 P10 229	Hinge .	158,00
74	2	2 610 923 224	Shoulder Screw .	40,00
75	2	2 915 061 003	Hex Nut DIN 985-M 5-8-A .	61,00
76	2	1 619 P01 636	Wing Nut .	43,00
78	2	2 910 281 201	Round-Head Bolt DIN	31,00
79	1	1 619 P01 668	Adjusting Lever .	30,00
80	1	1 600 A00 Z5N	Rod .	132,00

Please observe: Repairing, modifying and testing of electro-tools are to be performed professionally.The safety regulations according to IEC, EN, VDE, AFNOR and other regulations of the individual countries are to be observed. Subject to change.
This price list supersedes all previous edition. Prices are subjected to change without any prior notice.

BOSCH Power Tools	Circular hand saw	Model GKS 235 Turbo 3 601 EA2 0F0 | BO

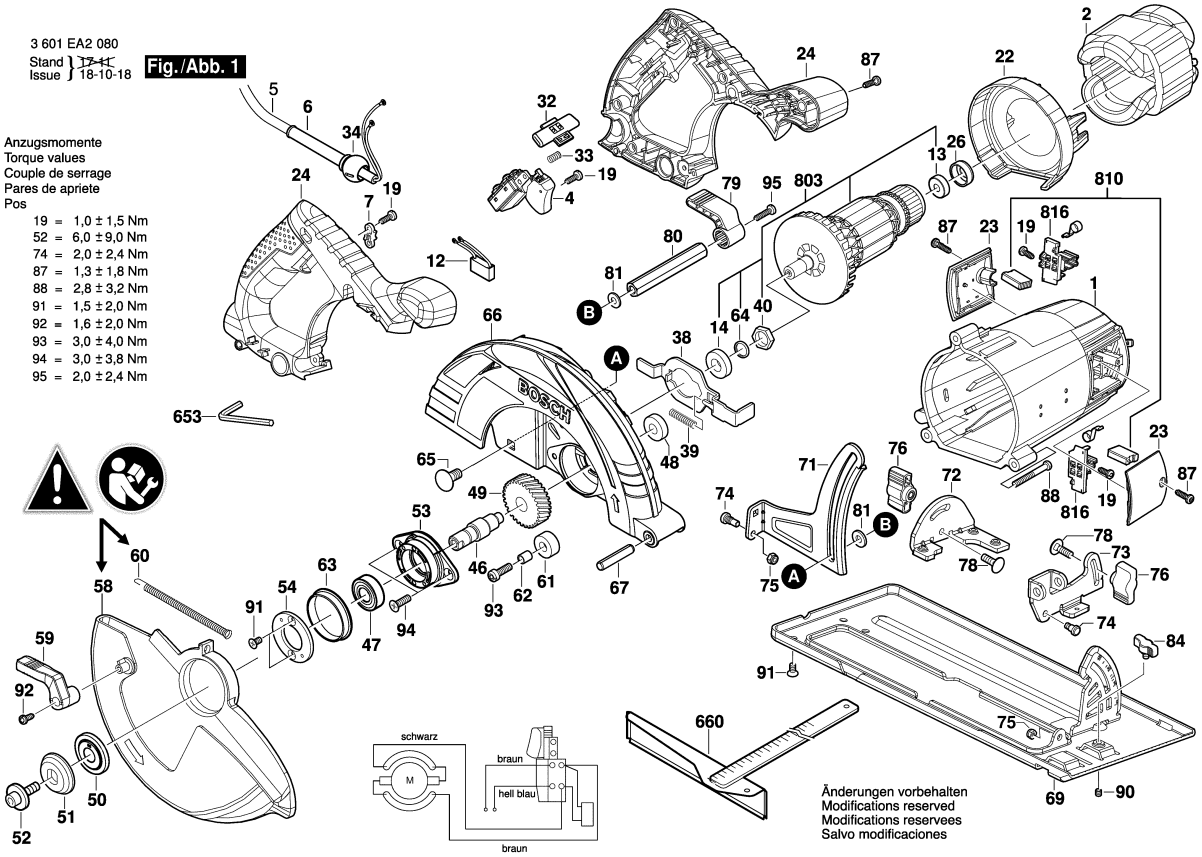

Model: 3 601 EA2 0F0 = 220 | Date:

Item	Pc	Order no.	Description	LP IN INR
81	1	2 916 021 013	Plain Washer 8-ST .	30,00
84	1	1 619 P01 618	Wing Screw BLACK	30,00
87	8	2 603 490 022	Screw 4x16 .	30,00
88	3	2 610 925 864	Screw .	30,00
90	1	1 619 P04 540	Adjusting Screw BLACK	30,00
91	5	1 619 P01 677	Screw M5x10-H .	44,00
92	1	1 619 P01 678	Screw .	30,00
93	1	1 619 P01 679	Screw .	41,00
94	2	1 619 P01 680	Screw M6x20-H .	44,00
95	1	1 619 P01 673	Screw .	30,00
653	1	2 610 364 015	Hexagon Socket Screw	87,00
660	1	1 619 X01 612	Mitre Fence .	126,00
803	1	1 619 P10 475	Armature set 230V .	3.286,00
810	1	1 619 P10 476	Carbon-Brush Set .	309,00
816	2	1 604 336 048	Brush Holder .	164,00

Please observe: Repairing, modifying and testing of electro-tools are to be performed professionally.The safety regulations according to IEC, EN, VDE, AFNOR and other regulations of the individual countries are to be observed. Subject to change.
This price list supersedes all previous edition. Prices are subjected to change without any prior notice.

BOSCH Power Tools	Circular hand saw	Model GKS 7000 3 601 F76 0F0 | BO

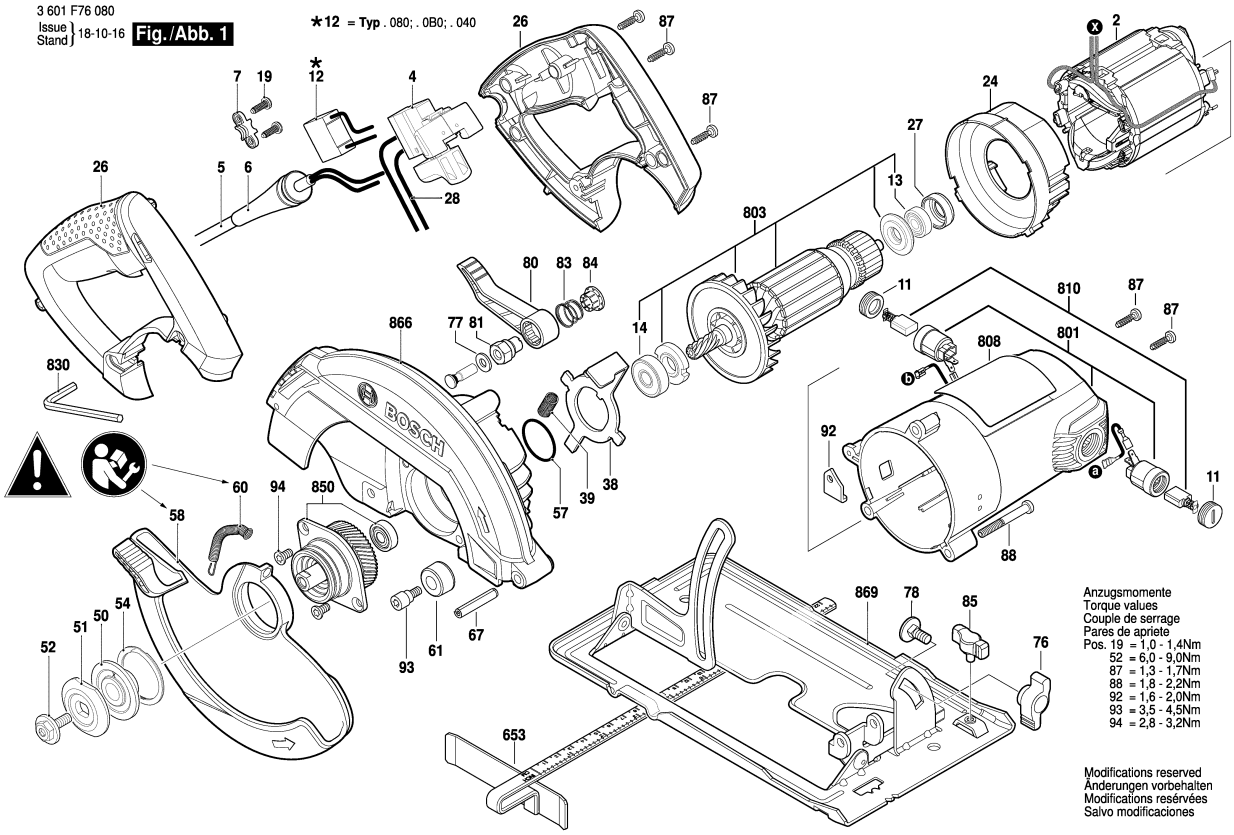

Model: 3 601 F76 0F0 = 220 | Date:

Item	Pc	Order no.	Description	LP IN INR
2	1	1 619 P08 314	Field 230V .	1.041,00
4	1	1 619 P09 971	Switch .	427,00
5	1	2 604 460 277	Power supply cord I/BR	1.384,00
6	1	2 600 703 017	Grommet Ø6,4-Ø7,2x76	71,00
7	1	1 619 P06 313	Cable Clip .	30,00
11	2	1 619 P06 286	Insulating Cap .	77,00
13	1	1 619 P00 456	Ball Bearing 7x19x6 MM .	58,00
14	1	1 900 905 173	groove ball bearing	104,00
19	2	2 603 490 021	Torx Oval-Head Screw	30,00
24	1	1 619 P09 797	Baffle .	110,00
26	1	1 619 P09 801	Set Of Handles .	486,00
27	1	1 619 P06 227	Rubber Ring .	30,00
28	1	1 619 P10 065	Connecting Cable .	43,00
29	1	1 619 P09 987	Connecting Cable .	28,00
38	1	1 619 P09 795	Guide Bracket .	40,00
39	1	2 610 936 576	Compression Spring .	39,00
50	1	1 619 P06 230	Washer .	159,00
51	1	1 619 P10 086	Locking Washer .	97,00
52	1	1 619 P06 232	Screw .	62,00
54	1	1 619 P06 238	Locking Washer .	30,00
57	1	F 000 640 007	O-Ring .	36,00
58	1	1 619 P09 803	Pivoting Blade Guard .	378,00
60	1	1 619 P09 794	Extension Spring .	85,00
61	1	1 619 P06 236	Bumper BLACK	30,00

Item	Pc	Order no.	Description	LP IN INR
67	1	1 619 P10 608	Slotted Spring Pin .	30,00
76	1	1 619 P06 244	Wing Nut .	48,00
77	1	2 916 021 013	Plain Washer 8-ST .	30,00
78	1	1 619 P06 211	Round-Head Bolt .	30,00
80	1	1 619 P10 037	Lever .	49,00
81	1	1 619 P09 798	Nut .	54,00
83	1	1 619 X01 792	Spring BLACK	30,00
84	1	1 619 P17 212	Cover .	56,00
85	1	1 619 P01 618	Wing Screw BLACK	30,00
87	6	2 603 490 022	Screw 4x16 .	30,00
88	3	2 610 925 864	Screw .	30,00
92	1	1 619 P09 874	Support plate .	40,00
93	1	1 619 P06 246	Screw .	30,00
94	2	2 610 924 687	Countersunk-Head Screw .	30,00
653	1	1 619 X05 789	Parallel-Guide .	208,00
801	1	1 619 P10 061	Motor Housing BLUE	512,00
803	1	1 619 P10 062	Armature set 230V .	1.618,00
808	1	1 619 P09 997	Nameplate .	
810	1	1 619 P10 063	Carbon-Brush Set .	195,00
830	1	1 619 P14 506	Offset Screwdriver .	30,00
850	1	1 619 P10 066	Gear .	762,00
866	1	1 619 P10 067	Protective Cover .	1.209,00
869	1	1 619 P10 064	Base Plate .	1.169,00

Please observe: Repairing, modifying and testing of electro-tools are to be performed professionally.The safety regulations according to IEC, EN, VDE, AFNOR and other regulations of the individual countries are to be observed. Subject to change.
This price list supersedes all previous edition. Prices are subjected to change without any prior notice.

BOSCH Power Tools	Universal Orbital Sander	Model GSS 2300 3 601 B98 0K0 | BO

3 601 B98 080
Issue Stand 20-03-24 Fig./Abb. 1

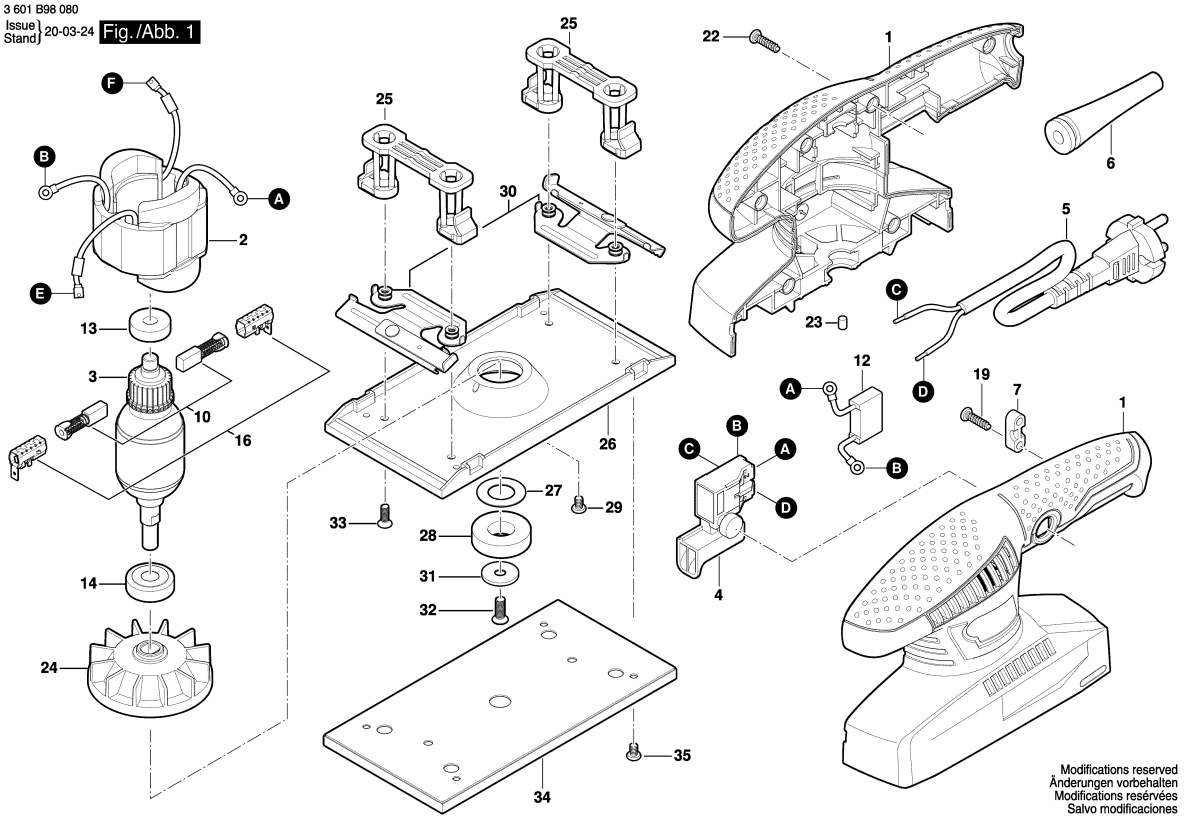

Model: 3 601 B98 0K0 = 230 | Date:

Item	Pc	Order no.	Description	LP IN INR
1	1	1 619 PA7 626	Housing Set .	592,00
2	1	1 619 PA7 627	Field assembly 220-240V .	629,00
3	1	1 619 PA7 629	Armature 220-240V .	733,00
4	1	1 619 PA7 631	Switch .	234,00
5	1	1 619 PA7 801	Power supply cord .	293,00
6	1	1 619 PA7 633	Grommet .	37,00
7	1	1 619 PA7 634	Clip .	37,00
10	1	1 619 PA7 635	Carbon-Brush Set .	194,00
12	1	1 619 PA7 636	Suppression Capacitor .	37,00
13	1	1 619 PA7 637	Bearing .	107,00
14	1	1 619 PA7 638	Bearing .	68,00
16	1	1 619 PA7 639	Carbon Brush Holder .	114,00
19	2	1 619 PA7 640	Screw .	37,00
22	6	1 619 PA7 641	Screw .	37,00
23	4	1 619 PA7 642	Rubber Pad .	37,00
24	1	1 619 PA7 643	Fan .	156,00
25	2	1 619 PA6 314	Support .	118,00
26	1	1 619 PA7 644	Baseplate .	344,00
27	1	1 619 PA7 645	Plain Washer .	37,00
28	1	1 619 PA7 646	Bearing .	124,00
29	2	1 619 PA7 647	Screw .	37,00
30	1	1 619 PA7 648	Clamp .	186,00
31	1	1 619 PA7 649	Plain Washer .	37,00
32	1	1 619 PA7 650	Screw .	37,00
33	4	1 619 PA7 651	Screw .	39,00
34	1	1 619 PA7 652	Foam Panel .	197,00
35	4	1 619 PA7 653	Screw .	37,00

Please observe: Repairing, modifying and testing of electro-tools are to be performed professionally.The safety regulations according to IEC, EN, VDE, AFNOR and other regulations of the individual countries are to be observed. Subject to change.
This price list supersedes all previous edition. Prices are subjected to change without any prior notice.

BOSCH Power Tools	Orbital Sander	Model GSS 140 3 601 BA8 0F0 | BO

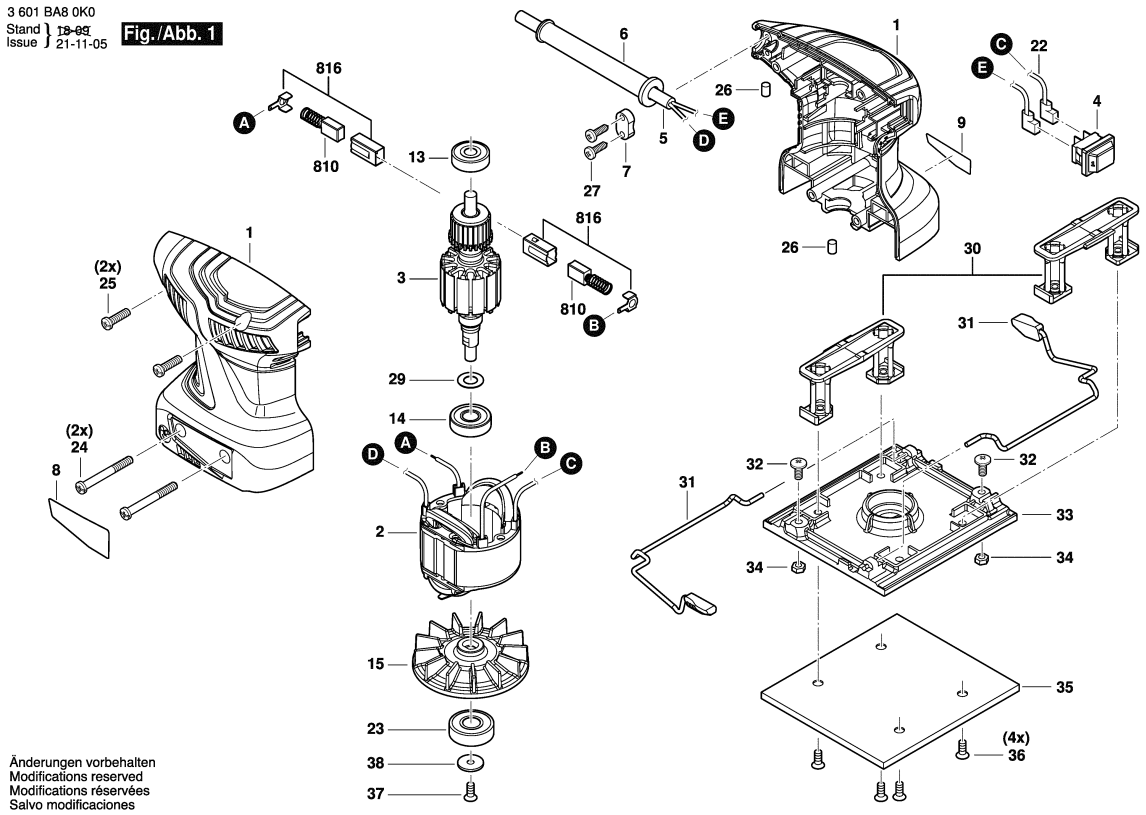

Model: 3 601 BA8 0F0 = 220 | Date:

Item	Pc	Order no.	Description	LP IN INR
1	1	1 605 108 2HV	Motor Housing .	416,00
2	1	1 604 220 577	Field .	379,00
3	1	1 604 010 B9N	Armature .	579,00
4	1	1 607 200 35P	Switch .	204,00
5	1	1 619 PB3 088	Power supply cord .	416,00
6	1	1 600 703 04Y	Grommet .	49,00
7	1	1 600 A01 4UJ	Fastening Clamp .	37,00
8	1	1 619 PB3 091	Nameplate .	
9	1	1 601 11C 2JZ	Nameplate .	
13	1	1 600 900 07K	Ball Bearing .	62,00
14	1	1 600 900 07L	Ball Bearing .	62,00
15	1	1 607 000 CX3	Fan .	257,00
22	2	1 604 477 023	Blade terminal .	98,00
23	1	1 600 900 07M	Ball Bearing .	260,00
24	2	1 603 430 05G	Screw .	37,00
25	2	1 603 430 05S	Screw .	37,00
26	2	1 600 A01 4UH	Pin .	37,00
27	2	1 603 430 05T	Screw .	37,00
29	1	1 600 A01 4KZ	Washer .	37,00
30	1	1 600 A01 4L1	Bracket .	103,00
31	2	1 600 A01 4L2	Clamp .	98,00
32	2	1 603 430 05U	Screw .	37,00
33	1	1 600 A01 4L3	base plate .	147,00
34	2	1 600 A01 4UK	Nut .	37,00
35	1	1 600 A01 4L4	Pad .	147,00
36	4	1 603 430 05V	Screw .	37,00
37	1	1 603 430 05W	Screw .	37,00
38	1	1 600 A01 4L0	Washer .	37,00
810	1	1 619 PB3 111	Carbon-Brush Set .	146,00
816	1	1 607 031 2E0	Brush Holder .	

Please observe: Repairing, modifying and testing of electro-tools are to be performed professionally.The safety regulations according to IEC, EN, VDE, AFNOR and other regulations of the individual countries are to be observed. Subject to change.
This price list supersedes all previous edition. Prices are subjected to change without any prior notice.

BOSCH Power Tools	Random orbital sander	Model GEX 125 3 601 CA8 0F0 | BO

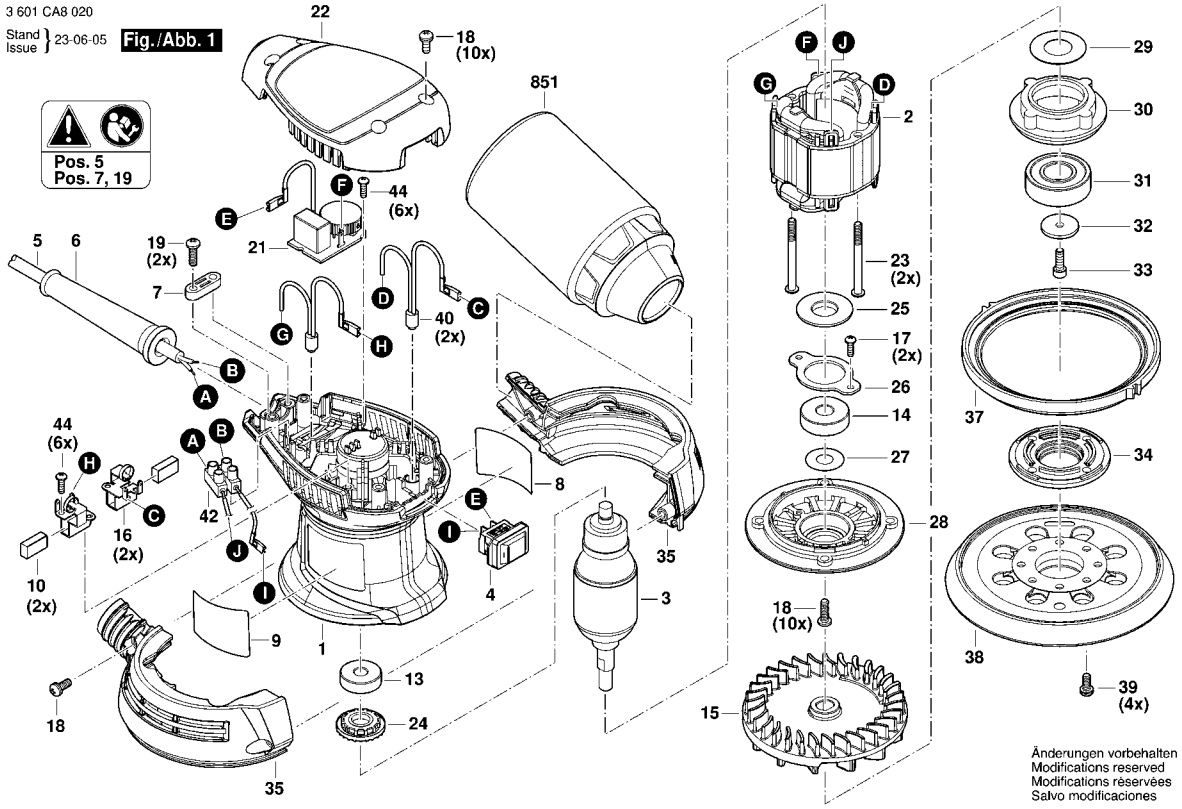

Model: 3 601 CA8 0F0 = 230 | Date:

Item	Pc	Order no.	Description	LP in INR
1	1	1 619 PC0 206	Housing .	313,00
2	1	1 619 PC0 207	Stator .	557,00
3	1	1 619 PC0 208	Armature .	1.047,00
4	1	1 619 PC0 209	Switch .	93,00
5	1	1 619 PC1 109	Power supply cord .	
6	1	1 619 PC0 211	Grommet .	27,00
7	1	1 619 PC0 212	Cable Clip .	26,00
8	1	1 619 PC1 137	Nameplate .	
9	1	1 619 PC0 214	Manufacturer's nameplate .	
10	2	1 619 PC0 215	Carbon Brush .	87,00
13	1	1 619 PC0 216	groove ball bearing .	61,00
14	1	1 619 PC0 217	groove ball bearing .	86,00
15	1	1 619 PC0 218	Fan .	427,00
16	2	1 619 PC0 219	Brush Holder .	38,00
17	6	1 619 PC0 220	Torx Oval-Head Screw .	26,00
18	10	1 619 PC0 221	Torx Oval-Head Screw .	26,00
19	2	1 619 PC0 222	Torx Oval-Head Screw .	26,00
21	1	1 619 PC0 223	Electronics Module .	288,00
22	1	1 619 PC0 224	Housing Cover .	165,00
23	2	1 619 PC0 225	Torx Oval-Head Screw .	26,00
24	1	1 619 PC0 226	Bearing cover .	26,00
25	1	1 619 PC0 227	Washer .	26,00
26	1	1 619 PC0 228	Bearing cover .	36,00
27	1	1 619 PC0 229	Washer .	26,00

Item	Pc	Order no.	Description	LP in INR
28	1	1 619 PC0 230	Housing Cover .	84,00
29	1	1 619 PC0 231	Washer .	26,00
30	1	1 619 PC0 232	Bearing Flange .	134,00
31	1	1 619 PC0 233	groove ball bearing .	168,00
32	1	1 619 PC0 234	Washer .	26,00
33	1	1 619 PC0 235	Torx Oval-Head Screw .	26,00
34	1	1 619 PC0 236	Cover .	36,00
35	1	1 619 PC0 237	Housing .	192,00
37	1	1 619 PC0 239	Friction Ring .	90,00
38	1	1 619 PC0 240	Backing Pad .	453,00
39	4	1 619 PC0 241	Torx Oval-Head Screw .	26,00
40	2	1 619 PC1 125	Rod choke .	26,00
42	1	1 619 PC0 242	Connecting Cable .	26,00
44	1	1 619 PC1 602	Torx Oval-Head Screw .	26,00
851	1	1 619 PC0 243	Dust container .	180,00

Please observe: Repairing, modifying and testing of electro-tools are to be performed professionally.The safety regulations according to IEC, EN, VDE, AFNOR and other regulations of the individual countries are to be observed. Subject to change.
This price list supersedes all previous edition. Prices are subjected to change without any prior notice.

BOSCH Power Tools	Random orbital sander	Model GEX 125-1 AE 3 601 C87 5K0 | BO

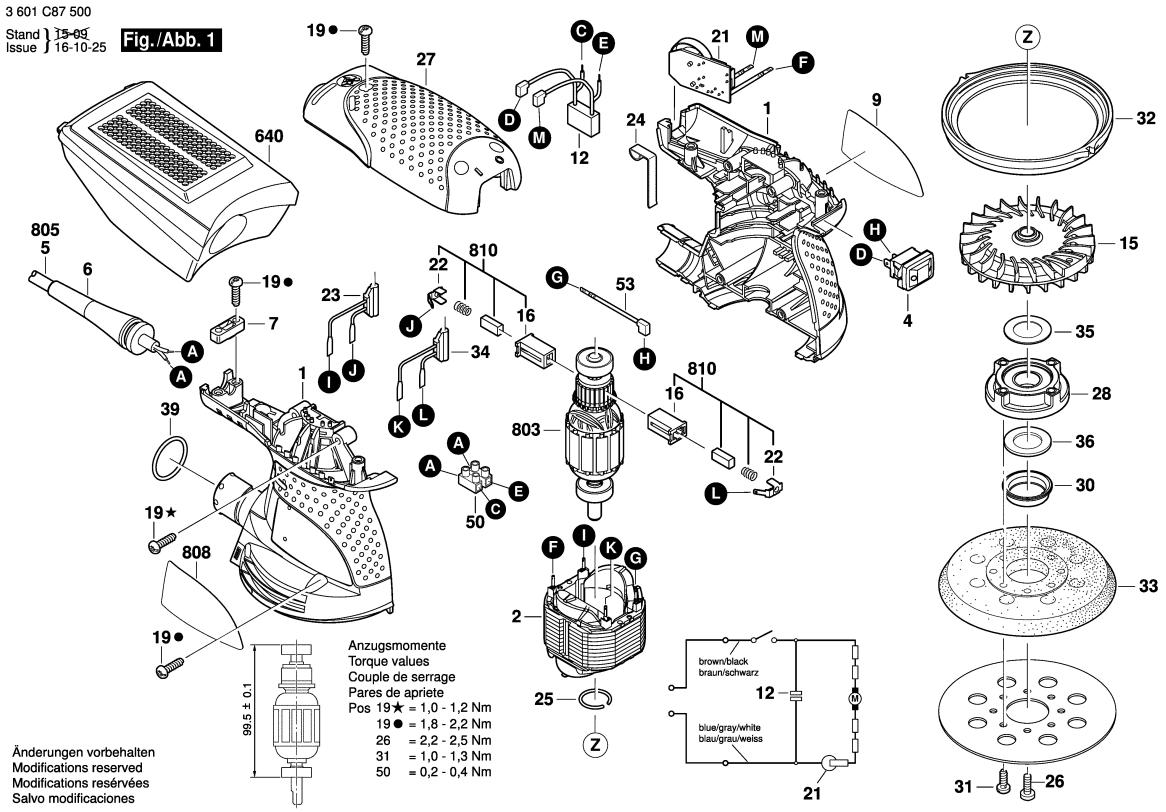

Model: 3 601 C87 5K0 = 230 | Date:

Item	Pc	Order no.	Description	LP IN INR
1	1	2 609 100 539	Housing .	559,00
2	1	2 609 120 299	Stator 230V .	719,00
4	1	1 607 200 190	Switch .	356,00
6	1	2 600 703 017	Grommet Ø6,4-Ø7,2x76	71,00
7	1	1 611 035 005	Cable Clip .	43,00
9	1	2 609 131 502	Manufacturer's nameplate	
12	1	2 609 120 282	Suppression Filter .	153,00
15	1	2 609 110 637	Fan .	1.120,00
16	2	2 610 320 548	Brush Holder .	67,00
19	9	2 603 490 022	Screw 4x16 .	30,00
21	1	2 609 120 266	Speed governor .	1.085,00
22	2	2 610 329 896	connecting terminal .	41,00
23	1	2 609 120 290	Suppression Filter .	100,00
24	1	2 601 329 043	Contact Strap .	45,00
25	1	2 916 540 005	Retaining ring DIN 7993-A8	30,00
26	1	2 610 918 116	Torx Oval-Head Screw .	100,00
27	1	2 609 100 538	Housing Cover .	311,00
28	1	2 609 100 862	Bearing Flange .	321,00
30	1	2 609 100 633	Cover .	58,00
31	4	2 610 915 161	Screw .	30,00
32	1	2 609 170 077	Friction Ring .	67,00
33	1	1 600 A01 CU1	Rubber Backing Pad .	514,00
34	1	2 609 120 291	Suppression Filter .	100,00
35	1	2 609 110 724	Washer .	44,00

Item	Pc	Order no.	Description	LP IN INR
36	1	2 609 170 084	Felt .	45,00
39	1	1 610 210 045	O-Ring 23,0x3,0 MM .	42,00
50	1	2 610 910 009	Connection Block .	82,00
53	1	2 609 120 284	Connecting Cable .	54,00
640	1	2 609 199 176	Dust container .	711,00
803	1	2 609 199 164	Armature 230V .	2.136,00
805	1	1 607 000 387	Power supply cord CN	271,00
808	1	2 609 131 530	Nameplate .	
810	1	2 609 120 199	Carbon-Brush Set .	271,00

Please observe: Repairing, modifying and testing of electro-tools are to be performed professionally.The safety regulations according to IEC, EN, VDE, AFNOR and other regulations of the individual countries are to be observed. Subject to change.
This price list supersedes all previous edition. Prices are subjected to change without any prior notice.

BOSCH Power Tools	Random orbital sander	Model GEX 150 AC 0 601 372 750 | BO

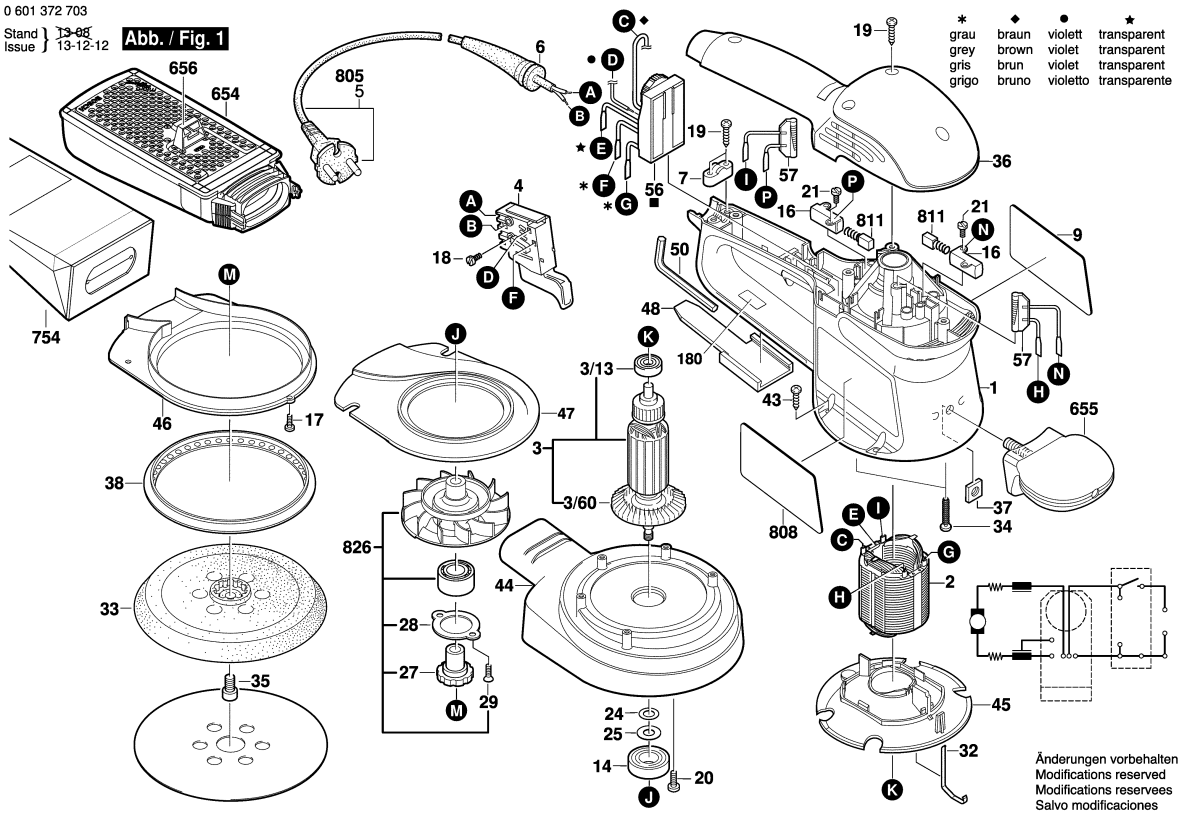

1 / 2

Model: 0 601 372 750 = 230 | Date:

Item	Pc	Order no.	Description	LP IN INR
1	1	2 605 104 410	Housing Section BLUE	724,00
2	1	2 604 220 529	Field 230-240V .	1.264,00
3	1	2 604 011 028	Armature 220-240V .	2.526,00
3/13	1	2 600 905 051	groove ball bearing 7x19x6	193,00
3/60	1	2 606 610 076	Fan .	116,00
4	1	2 607 200 260	Switch .	368,00
5	1	2 604 460 284	Power supply cord I / BR	
6	1	2 600 703 017	Grommet Ø6,4-Ø7,2x76	71,00
7	1	2 601 035 001	Cable Clip .	44,00
9	1	2 601 116 496	Manufacturer's nameplate .	
14	1	2 600 905 034	groove ball bearing .	408,00
16	2	2 604 337 016	Brush Holder .	55,00
17	3	2 603 435 089	Torx Oval-Head Screw	55,00
18	2	2 603 410 001	Socket head cap screw	50,00
19	6	2 603 490 022	Screw 4x16 .	30,00
20	2	1 600 A00 RD6	Special Screw .	72,00
21	4	2 603 490 017	Torx Oval-Head Screw	71,00
24	1	2 600 101 047	Shim 0,3 MM .	79,00
25	1	2 600 100 041	Plain Washer DIN	49,00
27	1	2 600 328 026	Carrier .	253,00
28	1	2 600 190 060	Tab Washer .	47,00
29	2	3 603 391 003	Thread-forming tap. Screw	49,00
32	1	2 601 329 053	Contact Strap .	50,00
33	1	2 608 601 106	Backing Pad Ø150 .	833,00

Item	Pc	Order no.	Description	LP IN INR
35	1	1 600 A01 5G7	Hex Socket Head Cap	47,00
36	1	2 605 500 124	Housing Cover BLUE	415,00
37	1	2 915 121 006	Square Nut DIN 562-M6-04	72,00
38	1	1 600 A00 JE7	Friction Ring .	128,00
43	4	2 603 435 042	Thread-forming tap. Screw	50,00
44	1	2 600 282 015	Suction Hood .	916,00
45	1	2 601 328 047	Air-Deflector Ring .	148,00
46	1	2 601 328 048	Suction Piece .	217,00
47	1	2 601 328 049	Suction Piece .	217,00
48	1	2 601 035 002	Pusher .	146,00
50	1	2 610 364 015	Hexagon Socket Screw	87,00
56	1	2 607 230 119	Speed governor 230-240V .	1.212,00
57	2	2 604 465 090	Suppression Filter .	203,00
654	1	2 605 411 193	Dust Chamber .	1.448,00
655	1	2 602 026 069	Auxiliary Handle BLACK	436,00
656	1	2 605 702 039	Adapter .	328,00
754	1	2 605 411 069	Dust Bag 1 PIECE	436,00
808	1	2 601 119 212	Marking Plate .	
811	1	1 607 014 117	Carbon Brush .	291,00
826	1	2 606 610 903	Fan .	1.968,00

Please observe: Repairing, modifying and testing of electro-tools are to be performed professionally.The safety regulations according to IEC, EN, VDE, AFNOR and other regulations of the individual countries are to be observed. Subject to change.
This price list supersedes all previous edition. Prices are subjected to change without any prior notice.

0 601 372 703
Stand } ~~99-01~~
Issue } 99-10-08

Abb./Fig. 2

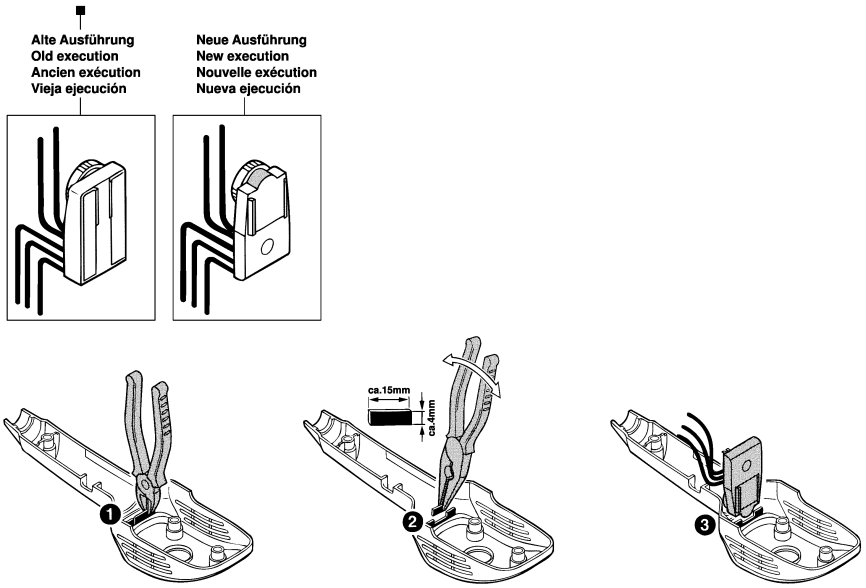

Änderungen vorbehalten
Modifications reserved
Modifications reservees
Salvo modificaciones

Model: 0 601 372 750 = 230	Date:

Item	Pc	Order no.	Description	LP IN INR	Item	Pc	Order no.	Description	LP IN INR

Please observe: Repairing, modifying and testing of electro-tools are to be performed professionally.The safety regulations according to IEC, EN, VDE, AFNOR and other regulations of the individual countries are to be observed. Subject to change.
This price list supersedes all previous edition. Prices are subjected to change without any prior notice.

BOSCH Power Tools	Random orbital sander	Model GEX 34-150 3 601 C72 8F0 | BO

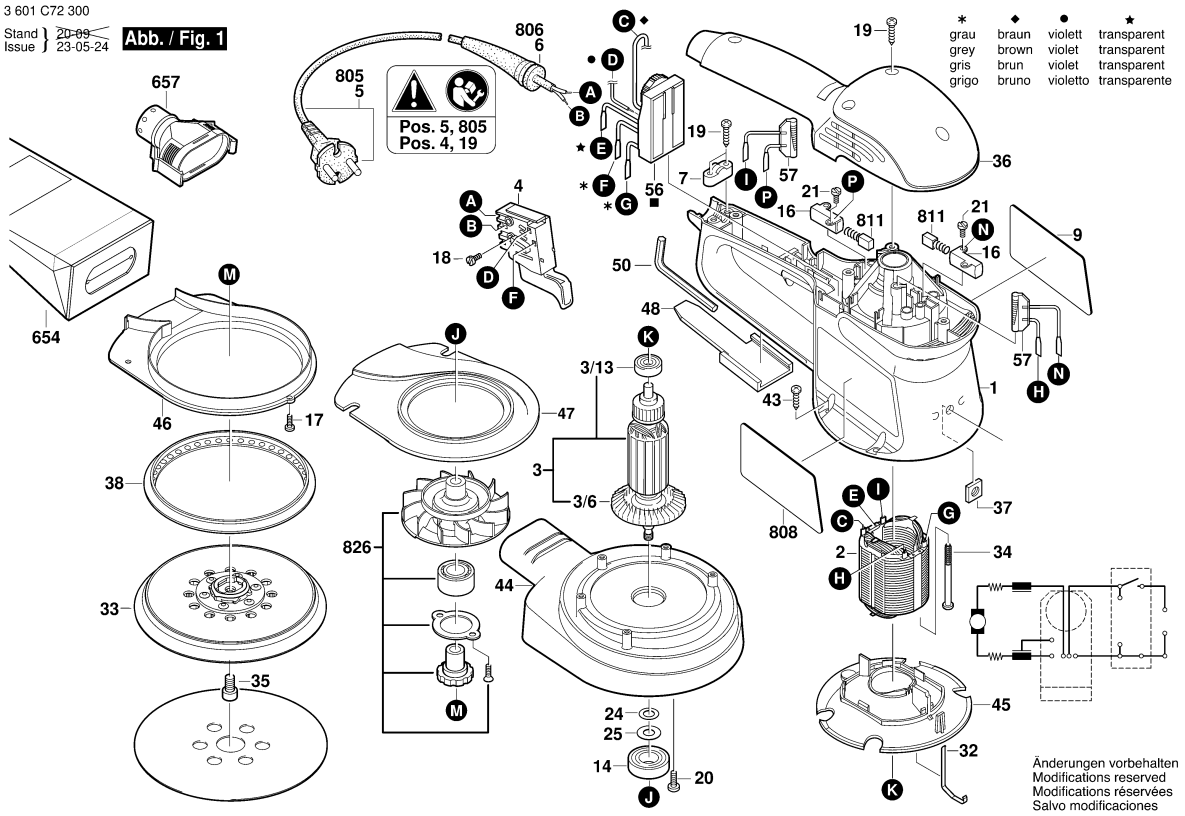

1 / 1

Model: 3 601 C72 8F0 = 230 | Date:

Item	Pc	Order no.	Description	LP IN INR
1	1	2 605 104 410	Housing Section BLUE	724,00
2	1	2 604 220 529	Field 230-240V .	1.264,00
3	1	2 604 011 028	Armature 220-240V .	2.526,00
3/13	1	2 600 905 086	groove ball bearing 7x19x6	219,00
3/60	1	2 606 610 076	Fan .	116,00
4	1	2 607 200 260	Switch .	368,00
7	1	2 601 035 001	Cable Clip .	44,00
9	1	1 601 11C 3VA	Manufacturer's nameplate	
14	1	2 600 905 034	groove ball bearing .	408,00
16	2	2 604 337 016	Brush Holder .	55,00
17	3	2 603 435 089	Torx Oval-Head Screw	55,00
18	2	2 603 410 001	Socket head cap screw	50,00
19	6	2 603 490 022	Screw 4x16 .	30,00
20	2	1 600 A00 RD6	Special Screw .	72,00
21	4	2 603 490 017	Torx Oval-Head Screw	71,00
24	1	2 600 101 047	Shim 0,3 MM .	79,00
25	1	2 600 100 041	Plain Washer DIN	49,00
32	1	2 601 329 053	Contact Strap .	50,00
33	1	2 608 614 075	Backing Pad Ø150 .	
34	2	2 603 435 086	Tapping Screw .	27,00
35	1	1 600 A01 5G7	Hex Socket Head Cap	47,00
36	1	2 605 500 124	Housing Cover BLUE	415,00
37	1	2 915 121 006	Square Nut DIN 562-M6-04	72,00
38	1	2 600 206 028	Friction Ring .	282,00

Item	Pc	Order no.	Description	LP IN INR
43	4	2 603 435 042	Thread-forming tap. Screw	50,00
44	1	2 600 282 015	Suction Hood .	916,00
45	1	2 601 328 047	Air-Deflector Ring .	148,00
46	1	2 601 328 048	Suction Piece .	217,00
47	1	2 601 328 049	Suction Piece .	217,00
48	1	2 601 035 002	Pusher .	146,00
50	1	2 610 364 015	Hexagon Socket Screw	87,00
56	1	2 607 230 119	Speed governor 230-240V .	1.212,00
57	2	2 604 465 090	Suppression Filter .	203,00
654	1	2 605 411 069	Dust Bag 1 PIECE	436,00
657	1	2 600 306 012	Adapter .	350,00
805	1	1 607 000 386	Power supply cord EU	1.288,00
806	1	2 600 703 017	Grommet Ø6,4-Ø7,2x76	71,00
808	1	1 601 11A 84C	Nameplate .	
811	1	1 607 014 117	Carbon Brush .	291,00
826	1	1 600 A02 30T	Fan .	1.882,00

Please observe: Repairing, modifying and testing of electro-tools are to be performed professionally.The safety regulations according to IEC, EN, VDE, AFNOR and other regulations of the individual countries are to be observed. Subject to change.
This price list supersedes all previous edition. Prices are subjected to change without any prior notice.

BOSCH Power Tools	Jig Saw	Model GST 650 3 601 EA8 0F0 | BO

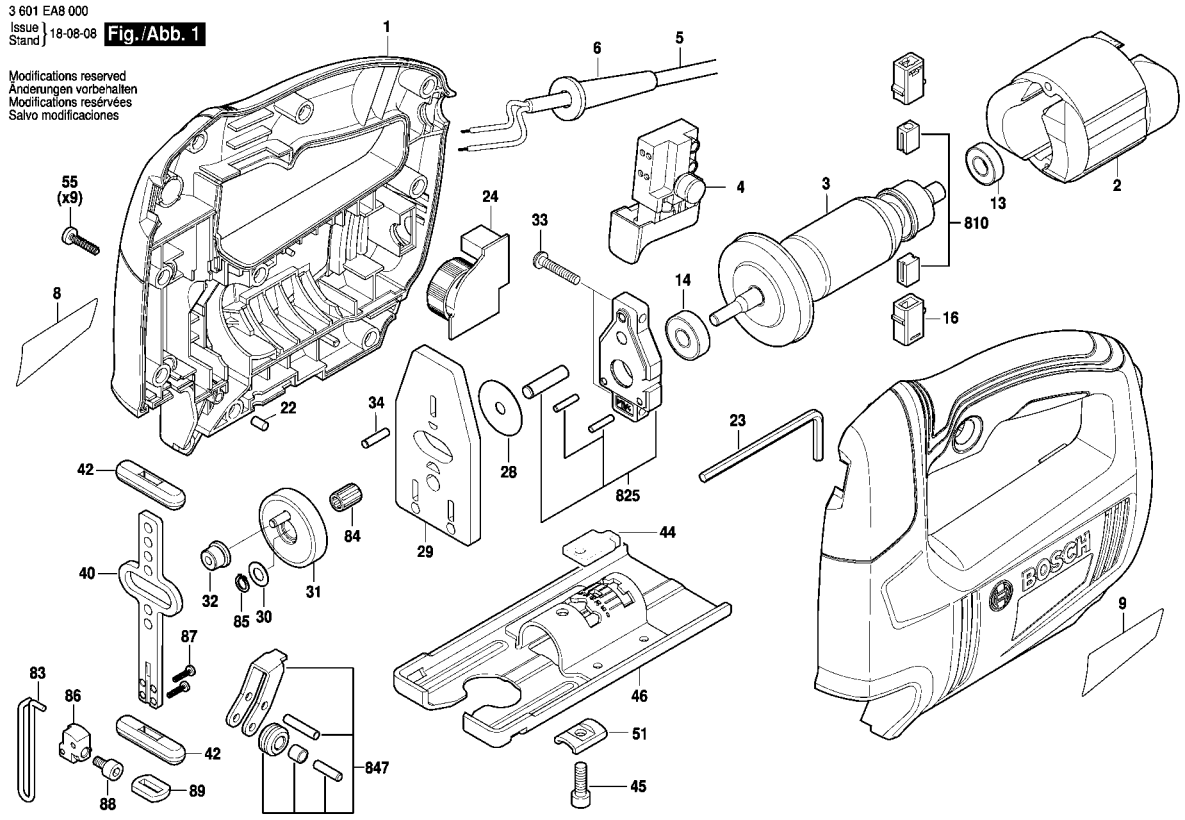

1 / 1

Model: 3 601 EA8 0F0 = 220 | Date:

Item	Pc	Order no.	Description	LP in INR
1	1	1 605 108 2H9	Motor Housing .	588,00
2	1	1 604 220 575	Field .	582,00
3	1	1 604 010 B9L	Armature .	709,00
4	1	1 607 200 35M	Switch .	208,00
5	1	1 619 PB5 628	Power supply cord .	
6	1	1 600 703 04X	Grommet .	74,00
8	1	1 619 PB3 095	Nameplate .	
9	1	1 601 11C 2K0	Sticker .	
13	1	1 600 900 07U	Ball Bearing .	70,00
14	1	1 600 900 07V	Ball Bearing .	68,00
16	2	1 600 A01 4KN	Brush Holder .	69,00
22	1	1 600 A01 4KL	Rubber .	31,00
23	1	1 600 A01 4UP	Offset Screwdriver .	31,00
24	1	1 607 233 5G5	Speed governor .	347,00
28	1	1 600 A01 4KU	Washer .	31,00
29	1	1 600 A01 4KV	Counter Weight .	188,00
30	1	1 600 150 035	Spring Lock Washer .	31,00
31	1	1 600 A01 4KW	Gear .	208,00
32	1	1 600 300 11Y	Bushing .	49,00
33	2	1 603 430 05B	Screw .	34,00
34	1	1 603 123 06P	Detent Pin .	34,00
40	1	1 600 A01 4KM	Bracket .	98,00
42	2	1 600 300 11X	Bushing .	67,00
44	1	1 600 A01 4C9	Nut .	34,00

Item	Pc	Order no.	Description	LP in INR
45	1	1 603 430 05E	Screw .	34,00
46	1	1 600 A01 4UT	Base Plate .	236,00
51	1	1 600 A01 4CD	Bracket .	34,00
55	9	1 603 430 05F	Screw .	34,00
83	1	1 600 A01 4UR	Clip .	34,00
84	1	1 600 A01 4KR	Needle bearing .	37,00
85	1	1 600 150 036	Spring Lock Washer .	37,00
86	1	1 600 A01 4CC	Blade Holder .	135,00
87	2	1 603 430 05C	Screw .	37,00
88	1	1 603 430 05D	Screw .	37,00
89	1	1 600 A01 4US	Seal .	37,00
810	1	1 619 PB3 118	Carbon-Brush Set .	87,00
825	1	1 619 PB3 162	Intermediate Bearing .	152,00
847	1	1 619 PB3 166	Bracket .	87,00

Please observe: Repairing, modifying and testing of electro-tools are to be performed professionally.The safety regulations according to IEC, EN, VDE, AFNOR and other regulations of the individual countries are to be observed. Subject to change.
This price list supersedes all previous edition. Prices are subjected to change without any prior notice.

BOSCH Power Tools	Jig Saw	Model GST 680 3 601 EB4 0F0 | BO

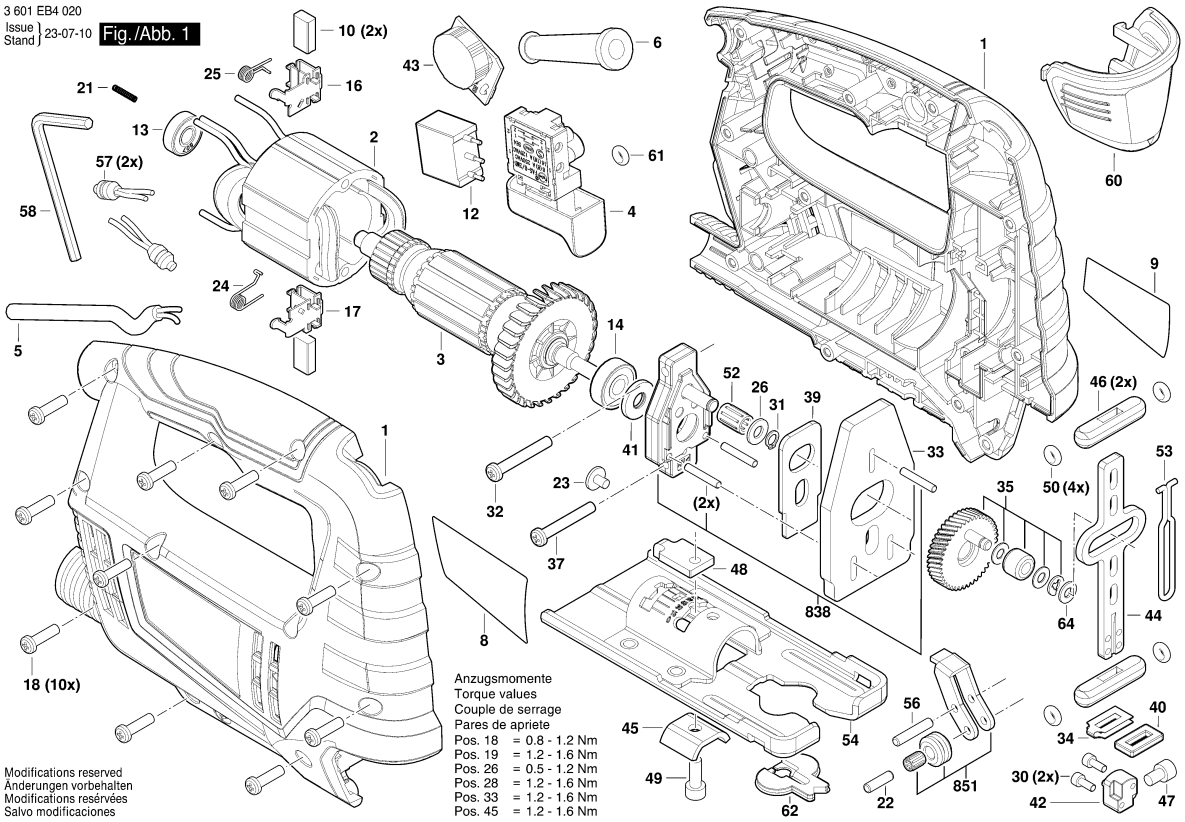

Model: 3 601 EB4 0F0 = 220 | Date:

Item	Pc	Order no.	Description	LP IN INR
1	1	1 619 PB9 574	Motor Housing .	539,00
2	1	1 619 PB9 609	Field 220-240V .	557,00
3	1	1 619 PB9 610	Armature 220-240V .	653,00
4	1	1 619 PB9 315	Switch .	155,00
5	1	1 619 PC0 580	Power supply cord .	
6	1	1 619 PB9 317	Grommet .	36,00
8	1	1 619 PC0 587	Nameplate .	
9	1	1 619 PB9 572	Sticker .	
10	1	1 619 PC0 576	Carbon Brush 220-240V .	172,00
12	1	1 619 PB9 321	Capacitor 0.33µF .	62,00
13	1	1 619 PB9 322	Ball Bearing 608-2RS .	54,00
14	1	1 619 PB9 323	Ball Bearing 5×9×17 .	56,00
16	1	1 619 PB9 324	Brush Holder 5×9×17 .	36,00
17	1	1 619 PB9 325	Brush Holder ST4.2×16 .	36,00
18	10	1 619 PB9 627	Pan head screw ST4.2×16	26,00
21	1	1 619 PB9 327	Spring f4.0 .	26,00
22	1	1 619 PB9 332	Pin .	26,00
23	1	1 619 PB9 326	Pan head screw	26,00
24	1	1 619 PB9 328	Torsion Spring .	26,00
25	1	1 619 PB9 616	Torsion Spring .	26,00
26	1	1 619 PB9 329	Washer f6.2×f12×1 .	26,00
30	2	1 619 PB9 634	Socket head cap screw	26,00
31	1	1 619 PB9 334	Backup ring .	26,00
32	1	1 619 PB9 614	Tapping Screw	26,00

Item	Pc	Order no.	Description	LP IN INR
33	1	1 619 PB9 615	Counter Weight .	198,00
34	1	1 619 PB9 577	Sealing washer f3.5X12 .	26,00
35	1	1 619 PC0 593	Gear .	288,00
37	1	1 619 PB9 335	Tapping Screw	26,00
39	1	1 619 PB9 629	Plate T=2.0MM .	36,00
40	1	1 619 PB9 578	Felt f3.5×12 .	26,00
41	1	1 619 PB9 639	Sealing Ring 8.5×18×1.8 .	26,00
42	1	1 619 PB9 576	Blade Holder .	143,00
43	1	1 619 PB9 579	Speed governor 220-230V	250,00
44	1	1 619 PB9 622	Bracket .	94,00
45	1	1 619 PB9 348	Bracket T=2.5MM .	26,00
46	2	1 619 PB9 349	Bushing .	36,00
47	1	1 619 PB9 350	Socket head cap screw	26,00
48	1	1 619 PB9 351	Bracket T=3.4MM .	36,00
49	1	1 619 PB9 352	Socket head cap screw	26,00
50	4	1 619 PB9 364	O-Ring .	26,00
52	1	1 619 PB9 355	Needle bearing HK060913 .	36,00
53	1	1 619 PB9 356	Clip .	36,00
54	1	1 619 PB9 357	Base Plate T=2.5MM .	176,00
56	1	1 619 PB9 359	Straight Pin f4×22 .	26,00
57	2	1 619 PB9 365	Inductor 0.01~0.015mH .	36,00
58	1	1 619 PB9 361	Offset Screwdriver 70×40 .	36,00
60	1	1 619 PB9 369	Covering hood PC .	47,00
61	1	1 619 PB9 594	Rubber .	26,00

Please observe: Repairing, modifying and testing of electro-tools are to be performed professionally.The safety regulations according to IEC, EN, VDE, AFNOR and other regulations of the individual countries are to be observed. Subject to change.
This price list supersedes all previous edition. Prices are subjected to change without any prior notice.

BOSCH Power Tools	Jig Saw	Model GST 680 3 601 EB4 0F0 | BO

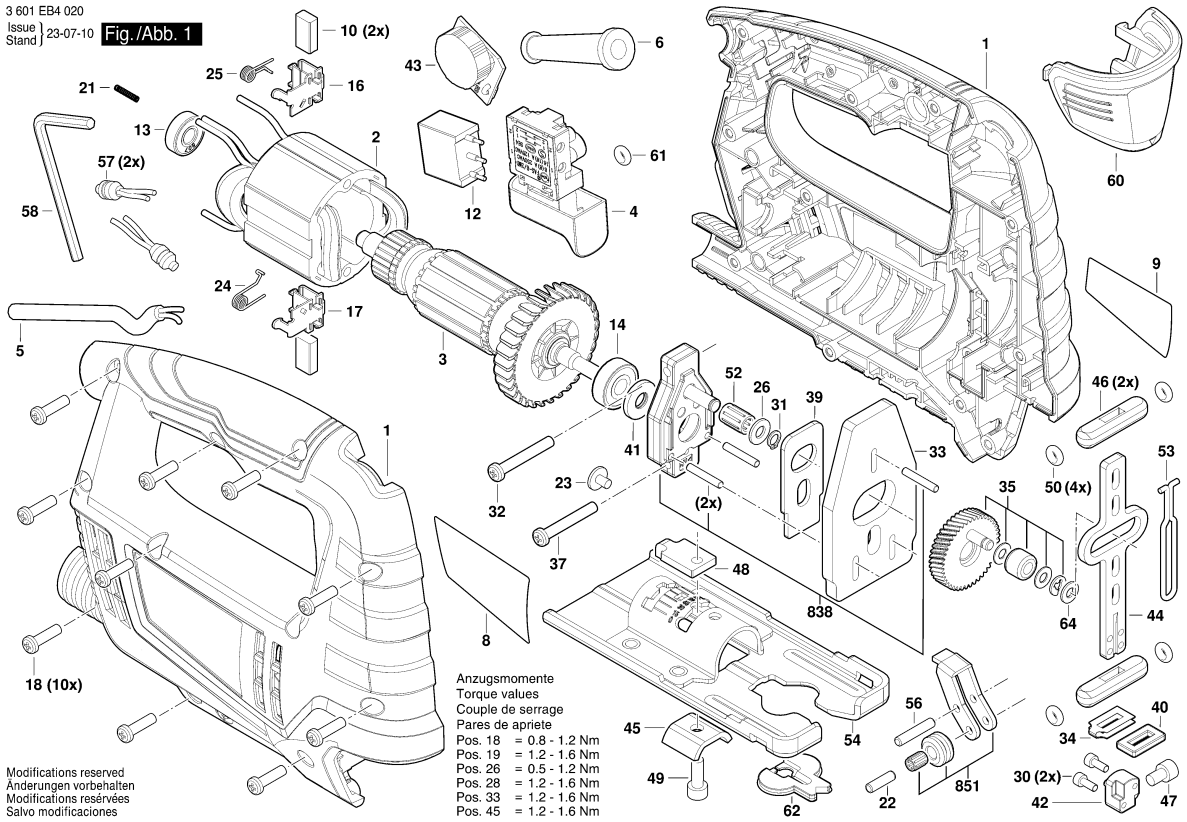

Model: 3 601 EB4 0F0 = 220 | Date:

Item	Pc	Order no.	Description	LP IN INR	Item	Pc	Order no.	Description	LP IN INR
62	1	1 619 PB9 571	Splintering Protector .	36,00					
64	1	1 619 PC0 595	bushing .						
838	1	1 619 PB9 593	Center Bracket .	137,00					
851	1	1 619 PB9 592	Plate .	116,00					

Please observe: Repairing, modifying and testing of electro-tools are to be performed professionally.The safety regulations according to IEC, EN, VDE, AFNOR and other regulations of the individual countries are to be observed. Subject to change.
This price list supersedes all previous edition. Prices are subjected to change without any prior notice.

BOSCH Power Tools	Jig Saw	Model GST 700 3 601 BA7 0F0 | BO

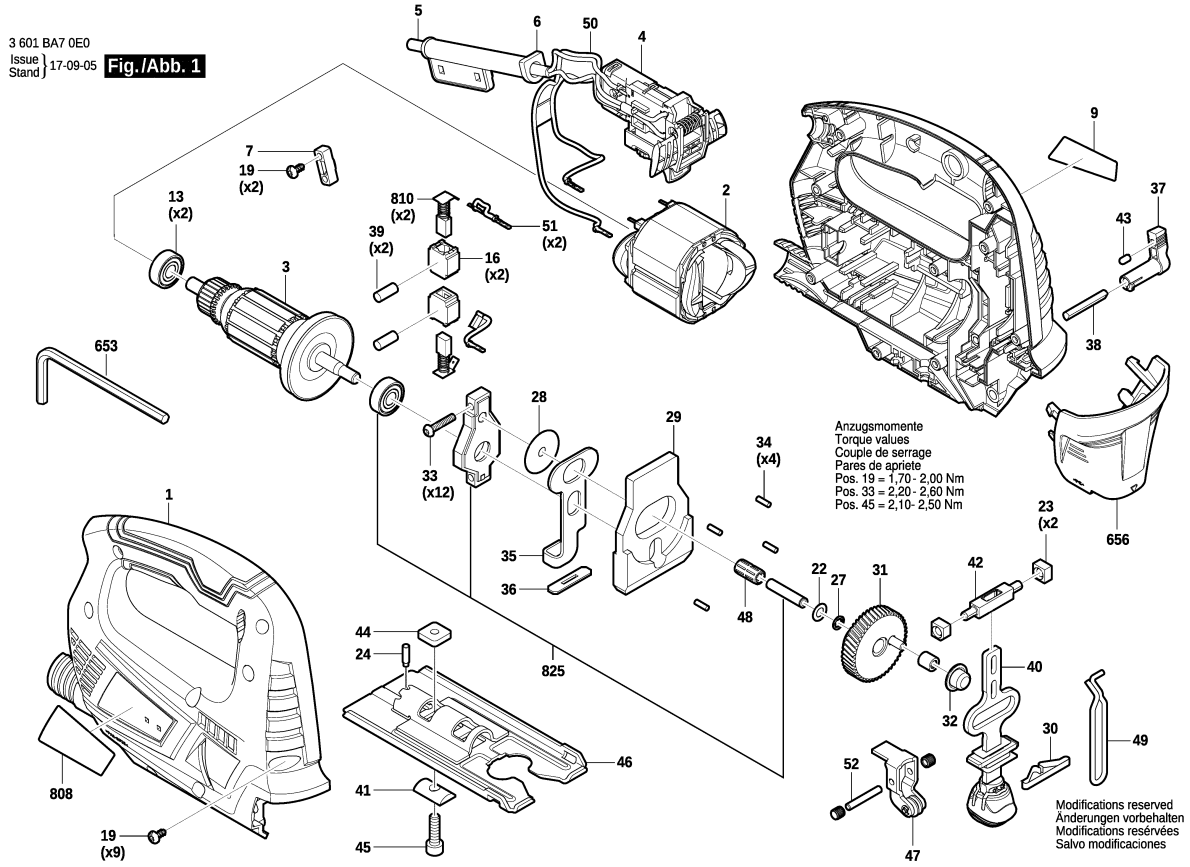

Model: 3 601 BA7 0F0 = 220 | Date:

Item	Pc	Order no.	Description	LP IN INR
1	1	1 619 P14 032	Housing Section .	645,00
2	1	1 619 P13 750	Field .	529,00
3	1	1 619 P13 749	Armature .	751,00
4	1	2 607 200 678	Switch .	386,00
5	1	1 619 P14 311	Power supply cord .	
6	1	1 619 P14 642	Grommet Ø 7mm .	44,00
6	1	1 619 P14 642	Grommet Ø 7mm .	44,00
7	1	2 601 035 001	Cable Clip .	44,00
9	1	1 619 P14 036	Manufacturer's nameplate .	
13	2	2 600 905 110	groove ball bearing 8x22x7	188,00
16	2	1 619 X02 735	Brush Holder .	164,00
19	11	2 603 490 022	Screw 4x16 .	30,00
22	1	1 619 P14 682	Shim .	62,00
23	2	1 619 P14 055	Insert .	85,00
24	1	2 603 120 019	Detent Pin .	38,00
27	1	1 619 X07 569	Spring retaining ring .	37,00
28	1	1 619 P01 396	Shim .	28,00
29	1	1 619 P14 042	Counterweight .	319,00
30	1	1 619 P14 636	Coiled Spring .	60,00
31	1	1 619 P14 043	Eccentric Cog Wheel .	461,00
32	1	2 600 914 022	Needle bearing .	167,00
33	2	2 609 110 610	Cyl Head tapping screw .	42,00
34	4	2 603 201 020	Bearing bolt .	38,00
35	1	1 619 P14 052	Fork Lever .	102,00

Item	Pc	Order no.	Description	LP IN INR
36	1	1 619 X04 574	Seal .	41,00
37	1	1 619 P14 053	Change-Over Switch .	85,00
38	1	1 619 P07 156	Control Shaft .	48,00
39	2	1 619 X01 409	Holding Pin .	38,00
40	1	1 619 P14 045	Lifting Rod .	516,00
41	1	1 619 P14 056	Profile Beading .	60,00
42	1	1 619 P14 049	Plain bearing .	116,00
43	1	2 600 590 006	Ratchet Cap .	50,00
44	1	1 619 P07 163	fixing plate .	73,00
45	1	1 619 X04 887	Hex Socket Head Cap	55,00
46	1	1 619 P14 050	Base Plate .	321,00
47	1	1 619 P16 757	Roller Lever .	373,00
48	1	1 619 P14 677	Needle-Roller Assembly .	116,00
49	1	1 619 P14 058	Protecting Cover .	90,00
50	1	1 619 P14 063	Cable Set .	90,00
51	2	1 619 P14 277	Cable .	102,00
52	1	1 619 P07 159	Bearing bolt .	34,00
653	1	2 610 364 015	Hexagon Socket Screw	87,00
656	1	1 619 P14 054	Covering hood .	92,00
808	1	1 619 P14 760	Nameplate .	
810	1	1 619 P13 476	Carbon-Brush Set .	136,00
825	1	1 619 P14 685	Bracket .	406,00
895	1	3 605 430 003	Grease Tube Albida .	1.473,00

Please observe: Repairing, modifying and testing of electro-tools are to be performed professionally.The safety regulations according to IEC, EN, VDE, AFNOR and other regulations of the individual countries are to be observed. Subject to change.
This price list supersedes all previous edition. Prices are subjected to change without any prior notice.

3 601 BA7 0E0
Issue Stand } 17-08-18 **Fig./Abb. 2**

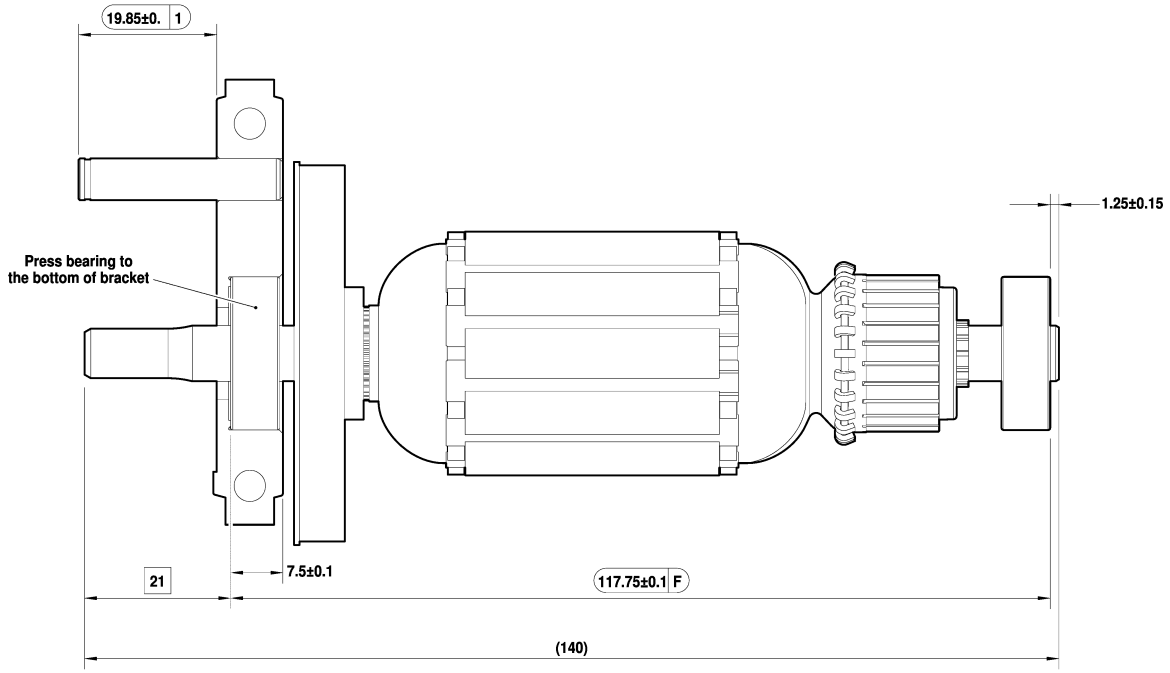

Modifications reserved
Änderungen vorbehalten
Modifications resérvées
Salvo modificaciones

2 / 3

Model: 3 601 BA7 0F0 = 220	Date:

Item	Pc	Order no.	Description	LP IN INR	Item	Pc	Order no.	Description	LP IN INR

Please observe: Repairing, modifying and testing of electro-tools are to be performed professionally.The safety regulations according to IEC, EN, VDE, AFNOR and other regulations of the individual countries are to be observed. Subject to change.
This price list supersedes all previous edition. Prices are subjected to change without any prior notice.

3 601 BA7 0E0
Issue / Stand } 17-09-05 **Fig./Abb. 3**

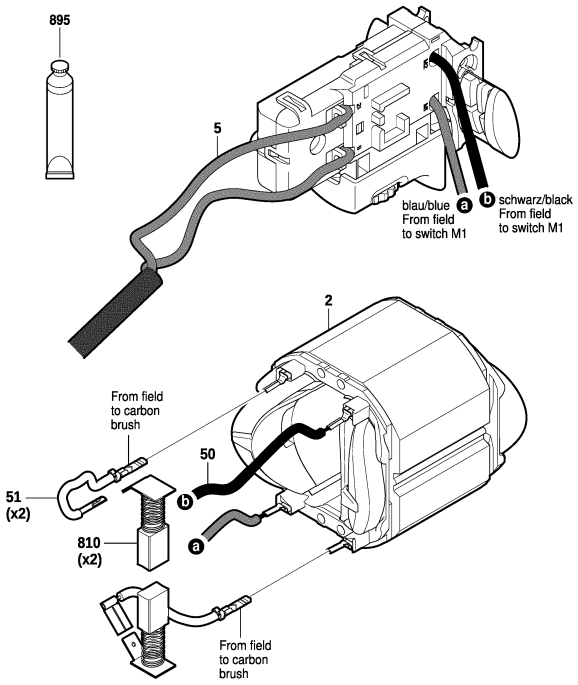

Modifications reserved
Änderungen vorbehalten
Modifications resérvées
Salvo modificaciones

Model: 3 601 BA7 0F0 = 220	Date:

Item	Pc	Order no.	Description	LP IN INR	Item	Pc	Order no.	Description	LP IN INR

Please observe: Repairing, modifying and testing of electro-tools are to be performed professionally.The safety regulations according to IEC, EN, VDE, AFNOR and other regulations of the individual countries are to be observed. Subject to change.
This price list supersedes all previous edition. Prices are subjected to change without any prior notice.

BOSCH Power Tools	Jig Saw	Model GST 90 BE 3 601 E8F 0F0 | BO

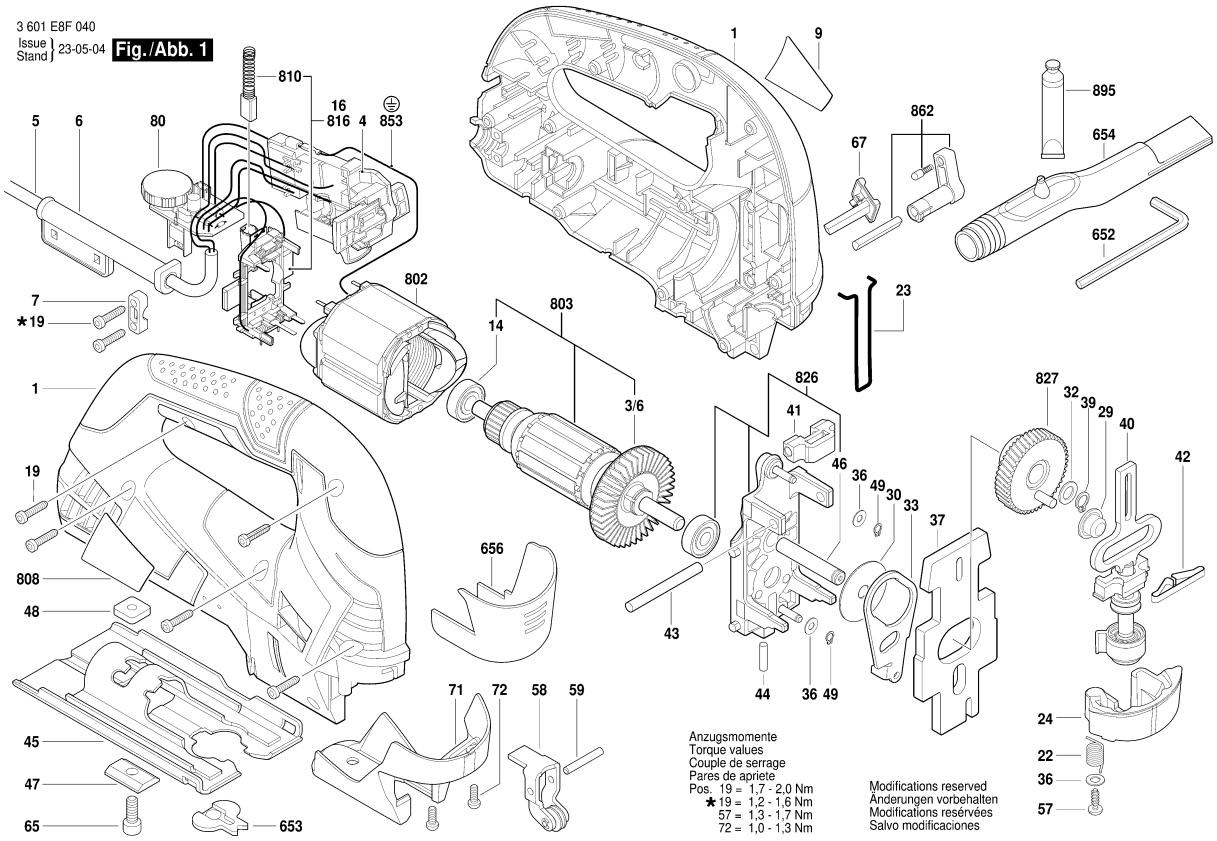

Model: 3 601 E8F 0F0 = 230 | Date:

Item	Pc	Order no.	Description	LP IN INR
1	1	1 619 P07 126	Housing Section DARK	1.637,00
3/6	1	2 606 610 123	Fan .	40,00
4	1	2 607 200 669	Switch .	561,00
5	1	1 619 P15 853	Power supply cord .	
6	1	2 600 703 026	Grommet Ø8,2-Ø9,4x95	
7	1	2 601 035 001	Cable Clip .	44,00
9	1	1 619 P16 143	Manufacturer's nameplate .	
14	1	2 600 905 110	groove ball bearing 8x22x7	188,00
19	11	2 603 490 022	Screw 4x16 .	30,00
22	1	1 619 P07 152	Torsion Spring .	98,00
23	1	1 619 P07 128	Protecting Cover .	165,00
24	1	1 619 P07 151	Lever Switch .	170,00
29	1	2 600 914 022	Needle bearing .	167,00
30	1	1 619 P07 576	Shim .	139,00
32	1	2 600 101 077	Shim 0,5 MM .	42,00
33	1	1 619 P07 137	Fork Lever .	212,00
36	3	2 600 100 588	Shim 0,5 MM .	48,00
37	1	1 619 P07 133	Counterweight .	392,00
39	1	2 916 640 905	Spring retaining ring 8x0,8	47,00
40	1	1 619 P07 147	Lifting Rod .	2.306,00
41	1	1 619 P08 903	Plain bearing .	225,00
42	1	1 619 P11 327	Coiled Spring .	133,00
43	1	1 619 P07 139	Needle Roller .	107,00
44	1	1 619 P07 143	Bearing bolt .	82,00

Item	Pc	Order no.	Description	LP IN INR
45	1	1 619 P07 162	Base Plate .	735,00
46	1	1 619 P07 138	Bearing bolt .	181,00
47	1	2 601 030 019	Profile Beading .	68,00
48	1	1 619 P07 163	fixing plate .	73,00
49	2	2 916 640 001	Spring retaining ring DIN	29,00
57	1	1 619 P02 848	Torx Oval-Head Screw	29,00
58	1	1 619 P13 426	Roller Lever .	659,00
59	1	1 619 P07 159	Bearing bolt .	34,00
65	1	2 910 141 197	Hex Socket Head Cap	28,00
67	1	1 619 P07 158	Switch Slide .	70,00
71	1	1 605 500 2CJ	Cover .	769,00
72	2	2 603 435 015	Cross Recessed-Head	44,00
80	1	1 619 P16 839	Speed governor .	1.690,00
652	1	2 610 364 015	Hexagon Socket Screw	87,00
653	1	2 601 016 065	Splintering Protector .	107,00
654	1	1 619 P07 167	Suction Nozzle .	380,00
656	1	1 619 P07 166	Covering hood .	254,00
802	1	1 619 P09 155	Field 220V .	774,00
803	1	1 619 P09 157	Armature 220V .	1.871,00
808	1	1 619 P16 120	Nameplate .	
810	1	2 604 321 925	Carbon-Brush Set .	236,00
816	1	2 609 001 621	Brush Plate .	469,00
826	1	1 619 P08 888	Bearing Bracket .	1.399,00
827	1	1 619 P08 889	Eccentric Cog Wheel .	820,00

Please observe: Repairing, modifying and testing of electro-tools are to be performed professionally.The safety regulations according to IEC, EN, VDE, AFNOR and other regulations of the individual countries are to be observed. Subject to change.
This price list supersedes all previous edition. Prices are subjected to change without any prior notice.

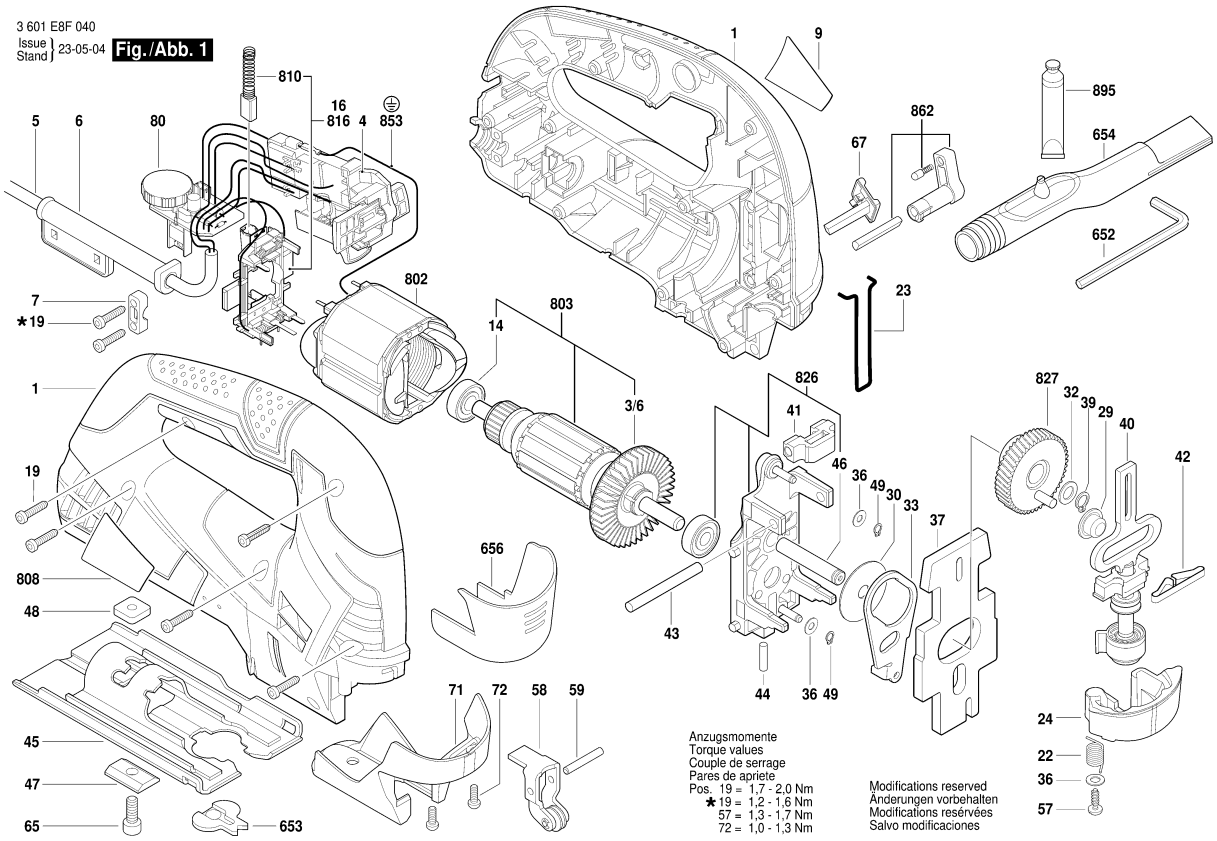

Model: 3 601 E8F 0F0 = 230 | Date:

Item	Pc	Order no.	Description	LP IN INR	Item	Pc	Order no.	Description	LP IN INR
853	1	1 619 P09 053	Earth Conductor .	212,00					
862	1	1 619 P08 890	Change-Over Switch .	285,00					
895	1	3 605 430 003	Grease Tube Albida .	1.473,00					

Please observe: Repairing, modifying and testing of electro-tools are to be performed professionally.The safety regulations according to IEC, EN, VDE, AFNOR and other regulations of the individual countries are to be observed. Subject to change.
This price list supersedes all previous edition. Prices are subjected to change without any prior notice.

BOSCH Power Tools	Router	Model GKF 550 3 601 FA0 0F1 | BO

3 601 FA0 081
Issue / Stand 23-05-29 **Fig./Abb. 1**

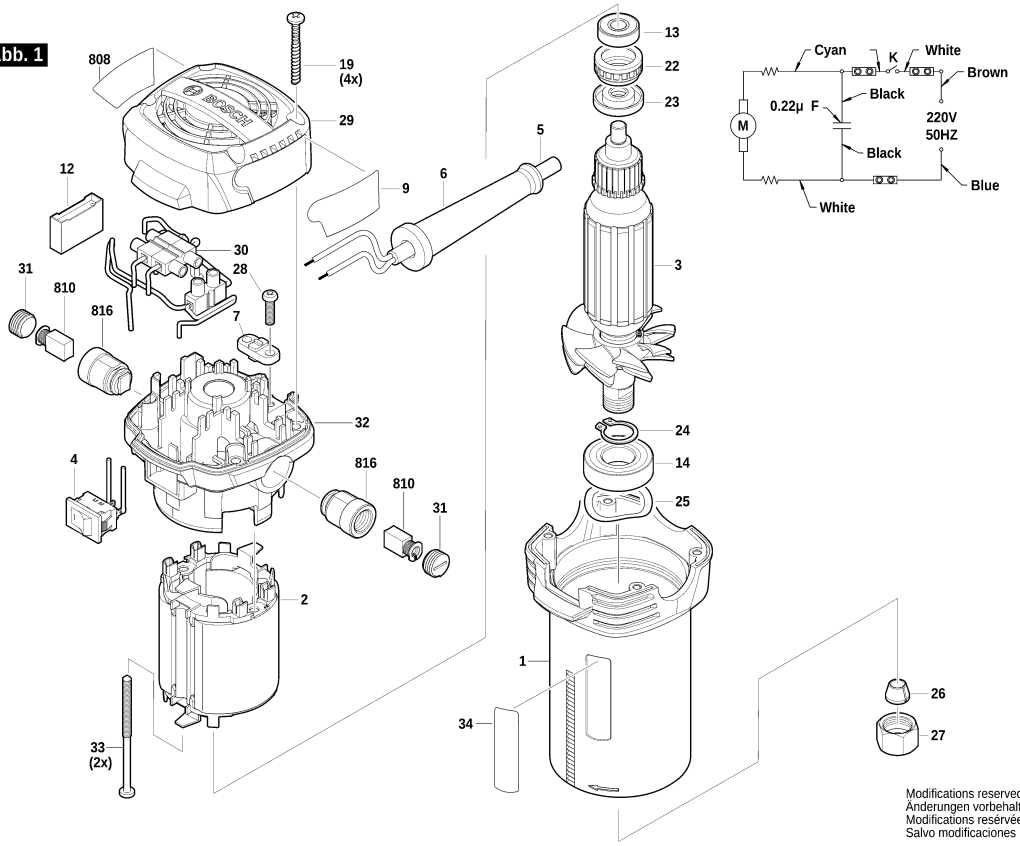

Modifications reserved
Änderungen vorbehalten
Modifications resérvées
Salvo modificaciones

Model: 3 601 FA0 0F1 = 230 | Date:

Item	Pc	Order no.	Description	LP IN INR
1	1	1 619 PB2 368	Motor Housing .	347,00
2	1	1 619 PB3 028	Field assembly 220~240V	764,00
3	1	1 619 PB3 031	Armature 220~240V	1.054,00
4	1	1 619 PB3 034	Switch .	174,00
5	1	1 619 PB3 037	Power supply cord EU .	220,00
6	1	1 619 PB3 045	Grommet .	31,00
7	1	1 619 PB3 046	Clip .	31,00
9	1	1 619 PB3 002	Manufacturer's nameplate	
12	1	1 619 PB3 048	Suppression Capacitor .	52,00
13	1	1 619 PB3 049	groove ball bearing .	147,00
14	1	1 619 PB3 050	groove ball bearing .	257,00
19	4	1 619 PB3 052	Screw .	31,00
22	1	1 619 PB3 053	Bearing Sleeve .	52,00
23	1	1 619 PB3 054	Backup ring .	31,00
24	1	1 619 PB3 055	Spacer Ring .	31,00
25	1	1 619 PB3 056	Corrugated Washer .	31,00
26	1	1 619 PB3 058	Collet 6mm 65Mn .	62,00
27	1	1 619 PB3 059	Union Nut .	85,00
28	1	1 619 PB3 060	Clamp Screw .	31,00
29	1	1 619 PB2 366	Cover .	122,00
30	3	1 619 PB3 061	Terminal Block .	31,00
31	2	1 619 PB3 062	Brush-Cover .	31,00
32	1	1 619 PB2 367	Motor Housing .	174,00
33	2	1 619 PB3 063	Screw .	31,00

Item	Pc	Order no.	Description	LP IN INR
34	1	1 619 PB3 004	Scale .	31,00
653	1	1 619 PB2 378	Guide Piece .	68,00
654	1	1 619 PB3 022	End stop .	547,00
654/1	1	1 619 PB3 064	Guide Plate .	143,00
654/2	1	1 619 PB3 065	Guide .	143,00
654/3	1	1 619 PB3 066	Screw .	31,00
654/4	1	1 619 PB3 067	Toothed lock washer .	31,00
654/5	1	1 619 PB3 068	Plate .	31,00
654/6	1	1 619 PB2 371	Wing Screw .	68,00
654/7	1	1 619 PB3 069	Screw .	31,00
654/8	1	1 619 PB3 070	Bushing .	31,00
654/9	1	1 619 PB3 071	Plain Washer .	31,00
654/10	1	1 619 PB3 072	Corrugated Washer .	31,00
654/11	1	1 619 PB2 372	Wing Screw .	52,00
655	1	1 619 PB3 021	Edge Guide .	344,00
655/1	1	1 619 PB3 073	Edge Guide .	98,00
655/2	1	1 619 PB3 074	Guide Bracket .	122,00
655/3	1	1 619 PB3 075	Special Screw .	31,00
655/4	1	1 619 PB3 076	Plain Washer .	31,00
655/5	1	1 619 PB2 373	Wing Screw .	31,00
655/9	1	1 619 PB3 071	Plain Washer .	31,00
655/10	1	1 619 PB3 072	Corrugated Washer .	31,00
656	1	1 619 PB2 369	Base .	710,00
656/1	1	1 619 PB3 077	Base .	349,00

Please observe: Repairing, modifying and testing of electro-tools are to be performed professionally.The safety regulations according to IEC, EN, VDE, AFNOR and other regulations of the individual countries are to be observed. Subject to change.
This price list supersedes all previous edition. Prices are subjected to change without any prior notice.

3 601 FA0 081
Issue / Stand 20-11-11 **Fig./Abb. 2**

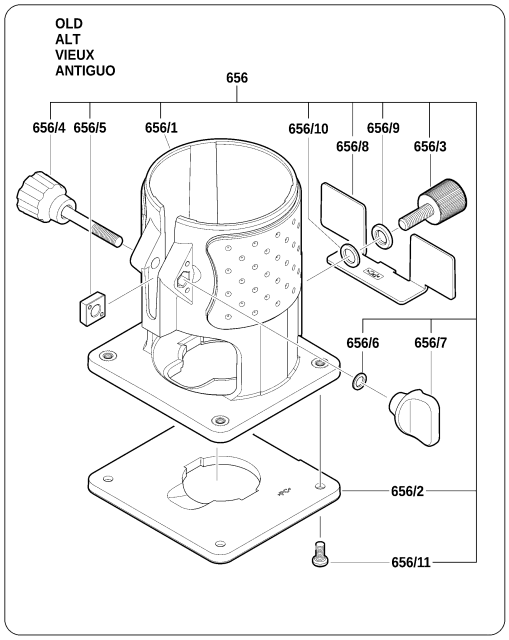

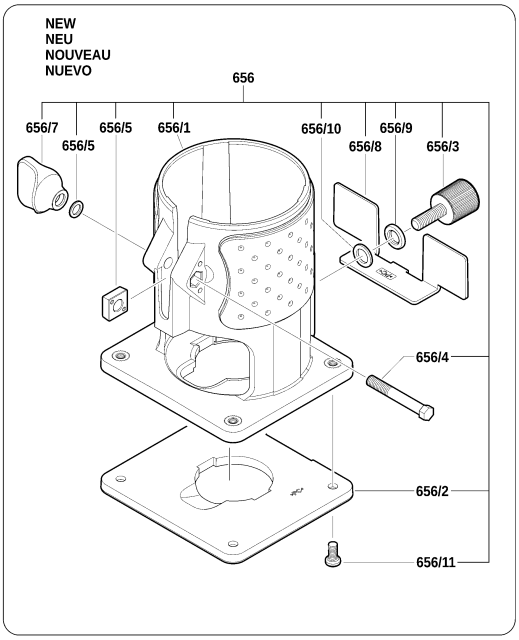

Modifications reserved
Änderungen vorbehalten
Modifications resérvées
Salvo modificaciones

Model: 3 601 FA0 0F1 = 230 | Date:

Item	Pc	Order no.	Description	LP IN INR	Item	Pc	Order no.	Description	LP IN INR
656/2	1	1 619 PB3 078	Base Plate .	111,00					
656/3	1	1 619 PB2 374	Knurled Thumbscrew .	52,00					
656/4	1	1 619 PB2 375	Knob .	52,00					
656/5	1	1 619 PB3 079	Spacer .	31,00					
656/6	1	1 619 PB3 080	Plain Washer .	31,00					
656/7	1	1 619 PB2 376	Knurled Thumbscrew .	52,00					
656/8	1	1 619 PB3 083	Chip Deflector .	52,00					
656/9	1	1 619 PB3 071	Plain Washer .	31,00					
656/10	1	1 619 PB3 072	Corrugated Washer .	31,00					
656/11	4	1 619 PB3 081	Screw .	31,00					
808	1	1 619 PB2 989	Nameplate .	0,00					
810	1	1 619 PB3 047	Carbon-Brush Set .	139,00					
816	1	1 619 PB3 051	Brush Holder .	73,00					

Please observe: Repairing, modifying and testing of electro-tools are to be performed professionally.The safety regulations according to IEC, EN, VDE, AFNOR and other regulations of the individual countries are to be observed. Subject to change.
This price list supersedes all previous edition. Prices are subjected to change without any prior notice.

3 601 FA0 081
Issue / Stand 20-11-11 **Fig./Abb. 3**

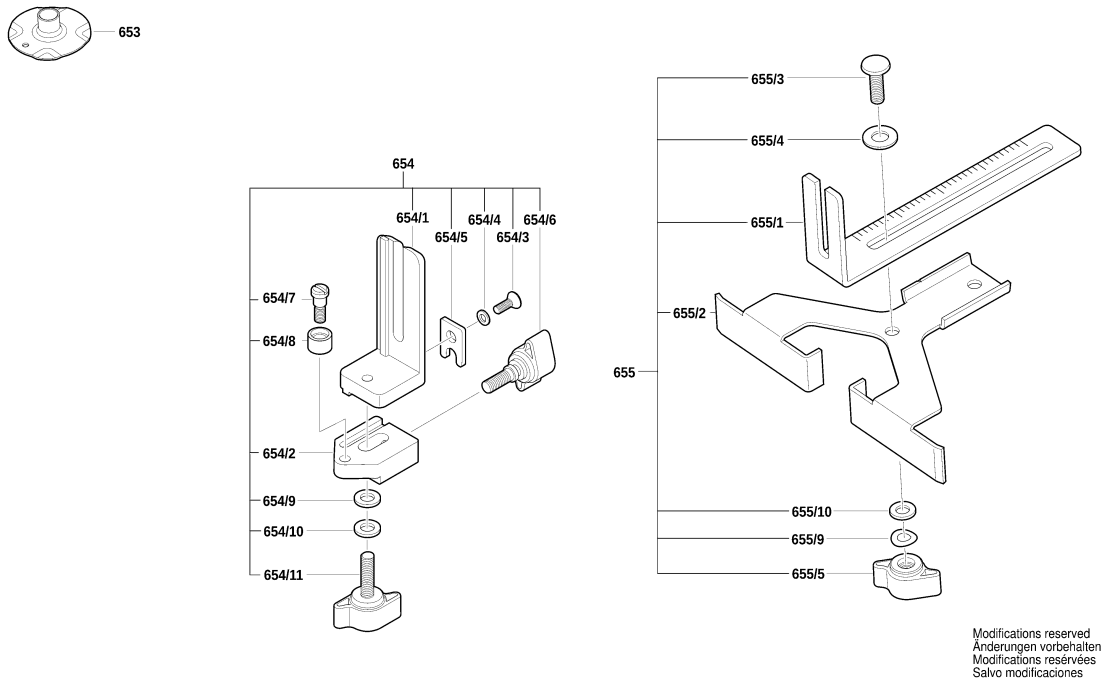

3 / 3

Model: 3 601 FA0 0F1 = 230 | Date:

Item	Pc	Order no.	Description	LP IN INR	Item	Pc	Order no.	Description	LP IN INR

Please observe: Repairing, modifying and testing of electro-tools are to be performed professionally.The safety regulations according to IEC, EN, VDE, AFNOR and other regulations of the individual countries are to be observed. Subject to change.
This price list supersedes all previous edition. Prices are subjected to change without any prior notice.

BOSCH Power Tools	Router	Model GOF 130 3 601 FB7 0F0 | BO

3 601 FB7 0K1

Stand ~~20-10-02~~
Issue 20-10-12

Fig. /Abb. 1

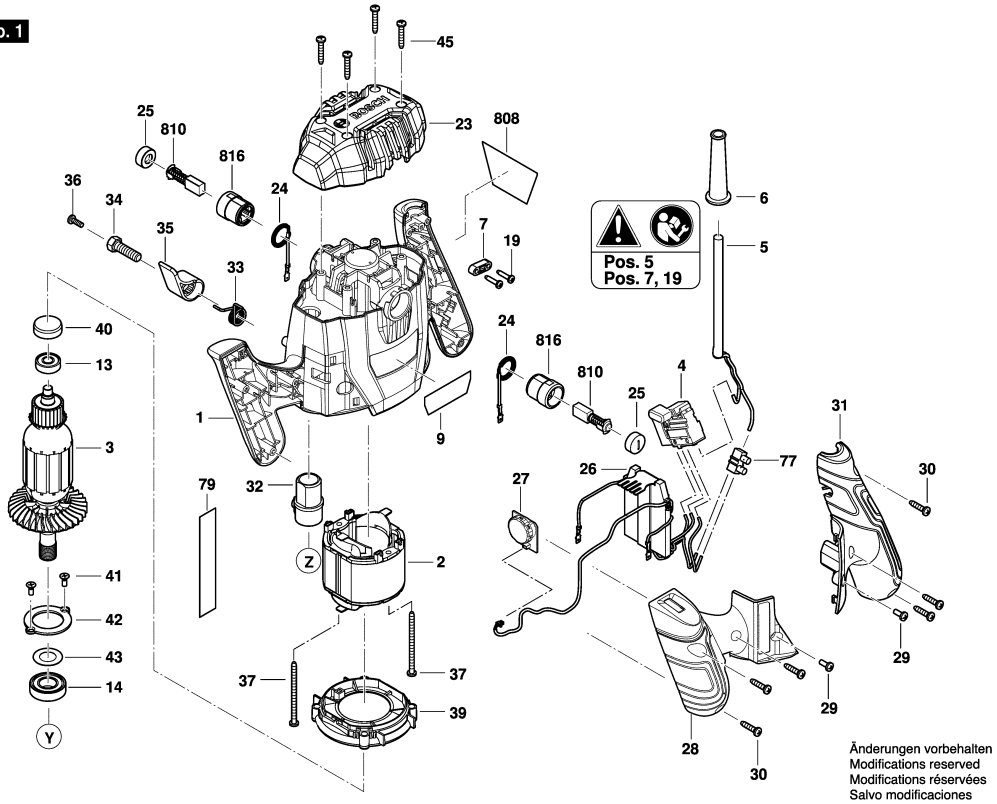

Anzugsmomente
Torque values
Couple de serrage
Pares de apriete

Pos. 30 = 1,75 - 2,15 Nm
19 = 1,35 - 1,75 Nm
41 = 1,35 - 1,75 Nm
45 = 1,75 - 2,15 Nm
51 = 3,00 - 3,50 Nm
37 = 1,75 - 2,15 Nm
25 = 0,50 - 0,80 Nm
29 = 1,75 - 2,15 Nm
36 = 1,35 - 1,75 Nm
52 = 2,15 - 2,75 Nm
62 = 1,35 - 1,75 Nm
72 = 1,35 - 1,75 Nm

Änderungen vorbehalten
Modifications reserved
Modifications réservées
Salvo modificaciones

Model: 3 601 FB7 0F0 = 230 | Date:

Item	Pc	Order no.	Description	LP IN INR
1	1	1 619 PB5 155	Motor Housing .	772,00
2	1	1 619 PB5 441	Field assembly 220-240V,	809,00
3	1	1 619 PB5 443	Armature 220-240V,	1.167,00
4	1	1 619 PB5 247	Switch .	244,00
5	1	1 619 PB5 528	Power supply cord IND	
6	1	1 619 PB5 453	Grommet .	29,00
7	1	1 619 PB5 541	Clip .	
9	1	1 619 PB5 414	Manufacturer's nameplate	
13	1	1 619 PB5 456	groove ball bearing 608-2Z	91,00
14	1	1 619 PB5 457	groove ball bearing	134,00
19	2	1 619 PB5 459	Screw 3.5x16 .	29,00
23	1	1 619 PB5 154	Cover .	223,00
24	2	1 619 PB5 460	Extension Spring .	137,00
25	2	1 619 PB5 461	Insulating Cap .	29,00
26	1	1 619 PB5 179	Printed Circuit Board	1.091,00
27	1	1 619 PB5 462	Printed-Board Assembly .	311,00
28	1	1 619 PB5 156	Handle Cover .	269,00
29	2	1 619 PB5 463	Screw M4x10 .	29,00
30	6	1 619 PB5 464	Screw .	29,00
31	1	1 619 PB5 157	Handle Cover .	343,00
32	1	1 619 PB5 465	Adjusting Screw .	169,00
33	1	1 619 PB5 466	Torsion Spring .	29,00
34	1	1 619 PB5 467	Locating bolt .	137,00
35	1	1 619 PB5 468	Locking Lever .	54,00

Item	Pc	Order no.	Description	LP IN INR
36	1	1 619 PB5 469	Screw .	29,00
37	2	1 619 PB5 470	Screw .	29,00
39	1	1 619 PB5 472	Air-Deflector Ring .	56,00
40	1	1 619 PB5 473	Bearing Sleeve .	29,00
41	2	1 619 PB5 474	Screw M4x10 .	29,00
42	1	1 619 PB5 475	Pressure Plate .	29,00
43	1	1 619 PB5 476	Plain Washer .	29,00
44	1	1 619 PB5 477	Wing Screw .	56,00
45	4	1 619 PB5 478	Screw 4.2x25 .	29,00
46	1	1 619 PB5 158	Indicator .	29,00
47	2	1 619 PB5 479	Seal Ring .	29,00
48	1	1 619 PB5 480	Retaining snap ring .	29,00
49	1	1 619 PB5 481	Plain Washer .	29,00
50	1	1 619 PB5 482	Guide Bracket .	643,00
51	1	1 619 PB5 483	Special Nut .	66,00
52	4	1 619 PB5 484	Lock-Screw M5x40 .	29,00
53	1	1 619 PB5 485	Stop Lever .	33,00
54	1	1 619 PB5 486	Cover .	169,00
55	1	1 619 PB5 487	Spiral Spring .	29,00
56	1	1 619 PB5 488	Stop Block .	71,00
57	4	1 619 PB5 489	Screw M4x18 .	29,00
59	2	1 619 PB5 493	Corrugated Pipe .	33,00
60	2	1 619 PB5 494	Spiral Spring .	29,00
62	1	1 619 PB5 496	Screw M4x5 .	29,00

Please observe: Repairing, modifying and testing of electro-tools are to be performed professionally.The safety regulations according to IEC, EN, VDE, AFNOR and other regulations of the individual countries are to be observed. Subject to change.
This price list supersedes all previous edition. Prices are subjected to change without any prior notice.

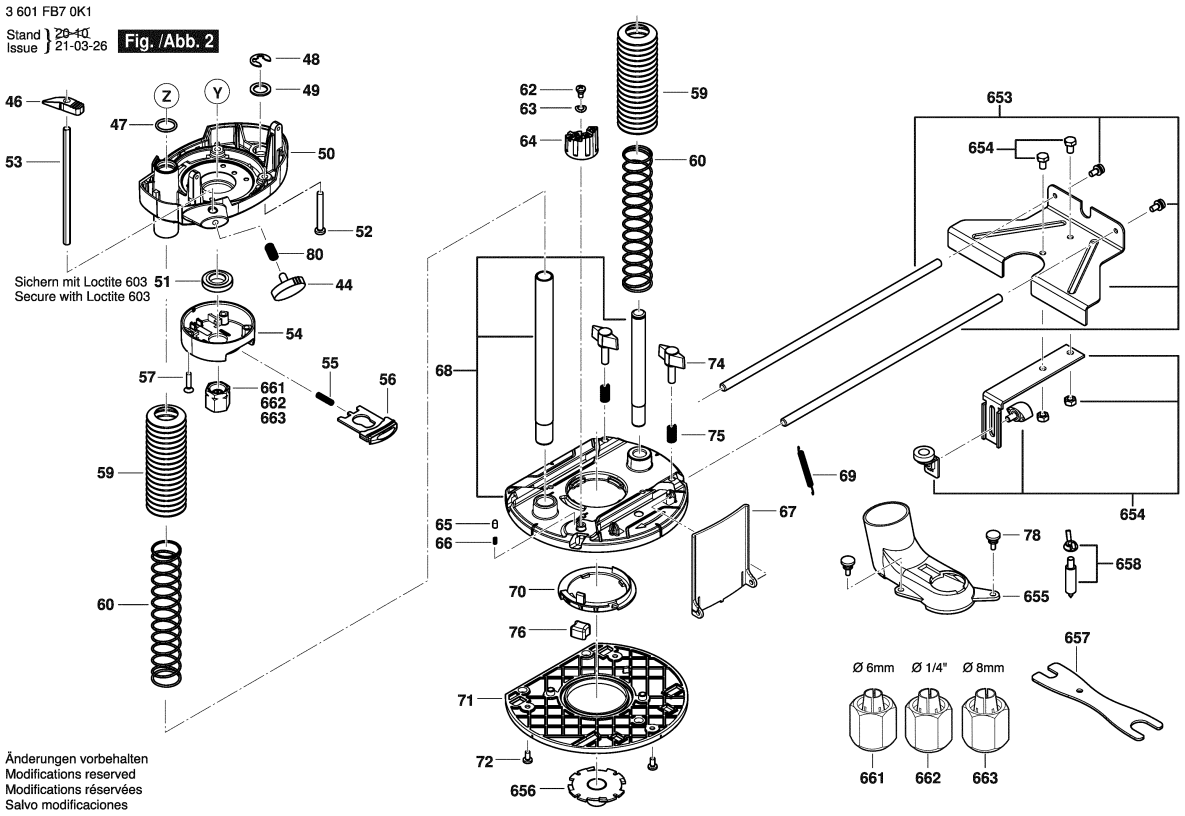

Model: 3 601 FB7 0F0 = 230 | Date:

Item	Pc	Order no.	Description	LP IN INR
63	1	1 619 PB5 497	Spring Lock Washer .	29,00
64	1	1 619 PB5 152	Gauge Block .	116,00
65	1	1 619 PB5 498	Capsule .	29,00
66	1	1 619 PB5 499	Spiral Spring .	29,00
67	1	1 619 PB5 500	Chip Deflector .	52,00
68	1	1 619 PB5 151	Base .	876,00
69	1	1 619 PB5 501	Spiral Spring .	29,00
70	1	1 619 PB5 502	Holding Plate .	107,00
71	1	1 619 PB5 503	Base Plate .	249,00
72	3	1 619 PB5 504	Screw .	29,00
74	2	1 619 PB5 506	Wing Screw .	49,00
75	2	1 619 PB5 507	Spiral Spring .	29,00
76	1	1 619 PB5 508	Block .	29,00
77	1	1 619 PB5 509	Terminal Block .	49,00
78	2	1 619 PB5 510	Screw M4x8 .	39,00
79	1	1 619 PB5 415	Label .	
80	1	1 619 PB7 042	Spiral Spring .	
653	1	1 619 PB5 511	Parallel-Guide .	405,00
654	1	1 619 PB5 515	Guide .	184,00
655	1	1 619 PB5 521	Suction Piece .	86,00
656	1	1 619 PB5 522	Guide .	103,00
657	1	1 600 A02 28G	Assembly Wrench .	109,00
658	1	1 619 PB5 523	Center Pin .	69,00
661	1	1 619 PB5 492	Union Nut Ø 6mm .	318,00

Item	Pc	Order no.	Description	LP IN INR
662	1	1 619 PB5 491	Union Nut Ø ¼ Inch .	334,00
663	1	1 619 PB5 490	Union Nut Ø 8mm .	328,00
808	1	1 619 PB5 407	Nameplate .	
810	1	1 619 PB5 455	Carbon-Brush Set .	99,00
816	1	1 619 PB5 458	Brush Holder .	45,00

Please observe: Repairing, modifying and testing of electro-tools are to be performed professionally.The safety regulations according to IEC, EN, VDE, AFNOR and other regulations of the individual countries are to be observed. Subject to change.
This price list supersedes all previous edition. Prices are subjected to change without any prior notice.

BOSCH Power Tools	Router	Model POF 1400 ACE 3 603 B6C 701 | BO

3 603 B6C 701
Stand } ~~07-06~~
Issue } 09-03-18

Fig./Abb. 1

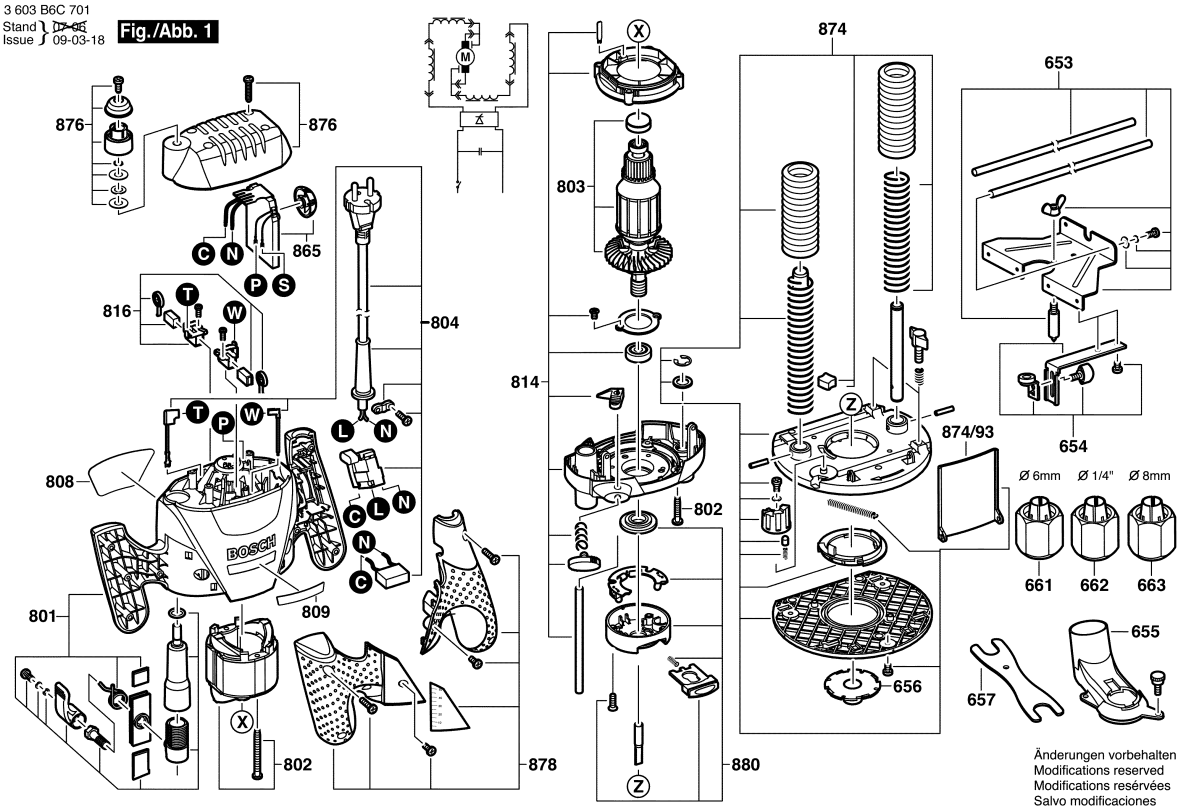

Model: 3 603 B6C 701 = 230 | Date:

Item	Pc	Order no.	Description	LP IN INR
653	1	1 609 203 V37	Parallel-Guide .	486,00
654	1	1 609 203 V38	Stud-type track roller .	167,00
655	1	1 609 203 V32	Suction Piece .	186,00
656	1	1 609 203 V39	Sleeve .	86,00
657	1	1 600 A02 28G	Assembly Wrench .	109,00
661	1	1 609 203 V41	Union Nut .	416,00
662	1	1 609 203 V42	Union Nut .	416,00
663	1	1 609 203 V43	Union Nut .	416,00
801	1	1 609 203 W34	Motor Housing .	1.271,00
802	1	1 609 203 V60	Field .	
803	1	1 609 203 V61	Armature .	
804	1	1 619 PB2 930	On-Off Switch .	830,00
808	1	1 601 118 N14	Nameplate .	
809	1	1 601 118 N20	Manufacturer's nameplate	
814	1	1 609 203 V50	Guide Component .	1.354,00
816	1	1 609 203 V51	Brush Holder .	360,00
865	1	1 609 203 V62	Speed governor .	1.386,00
874	1	1 609 203 V53	Base Plate .	1.659,00
874/93	1	1 609 203 P06	Chip Deflector .	219,00
876	1	1 609 203 W36	Housing Cover .	220,00
878	1	1 609 203 V55	Handle Cover .	623,00
880	1	1 609 203 W03	Pusher Housing .	947,00

Please observe: Repairing, modifying and testing of electro-tools are to be performed professionally.The safety regulations according to IEC, EN, VDE, AFNOR and other regulations of the individual countries are to be observed. Subject to change.
This price list supersedes all previous edition. Prices are subjected to change without any prior notice.

BOSCH Power Tools	Screwdriver	Model GTB 650 3 601 DA2 0F0 | BO

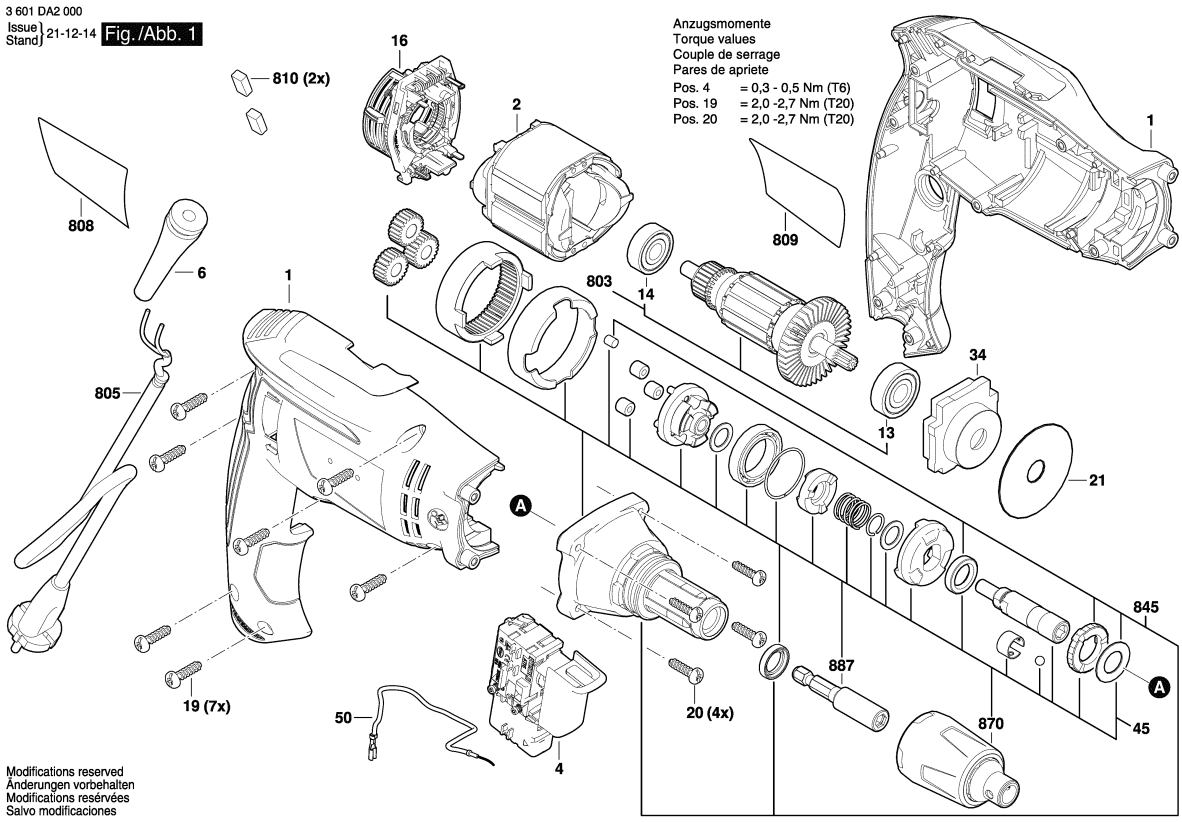

Model: 3 601 DA2 0F0 = 230 | Date:

Item	Pc	Order no.	Description	LP IN INR	Item	Pc	Order no.	Description	LP IN INR
1	1	1 600 A00 N82	Housing .	737,00					
2	1	1 600 A00 N7Y	Stator .	833,00					
4	1	2 607 200 717	Switch .	801,00					
6	1	2 600 703 017	Grommet Ø6,4-Ø7,2x76	71,00					
13	1	1 900 905 021	groove ball bearing 9x24x7	132,00					
14	1	2 609 110 491	Ball Bearing .	39,00					
16	1	2 609 199 403	Brush Plate .	504,00					
19	7	2 603 490 022	Screw 4x16 .	30,00					
20	4	2 603 490 022	Screw 4x16 .	30,00					
21	1	2 609 111 419	Friction Washer .	64,00					
34	1	1 600 A01 MN8	Bearing Bracket .	352,00					
45	1	1 600 A01 37V	Gear Unit .	2.757,00					
50	1	1 600 A02 0XW	Earth Conductor .	192,00					
803	1	1 607 000 E46	Armature set Anker Set						
805	1	1 604 460 781	Power supply cord IND .						
808	1	1 601 11A 5FJ	Nameplate .						
809	1	6 082 942 MV5	Nameplate GTB 650 .						
810	1	2 610 391 290	Carbon-Brush Set .	43,00					
845	1	1 607 000 E4F	Gear Housing .	852,00					
870	1	1 600 A01 A4D	Depth-Gauge .	516,00					
887	1	2 609 111 664	Toolholder .	281,00					

Please observe: Repairing, modifying and testing of electro-tools are to be performed professionally.The safety regulations according to IEC, EN, VDE, AFNOR and other regulations of the individual countries are to be observed. Subject to change.
This price list supersedes all previous edition. Prices are subjected to change without any prior notice.

BOSCH Power Tools	Industrial vacuum cleaner	Model GAS 12-25 3 601 J7C 0F0 | BO

3 601 J7C 0K0
Issue Stand 19-05-29 Fig./Abb. 1

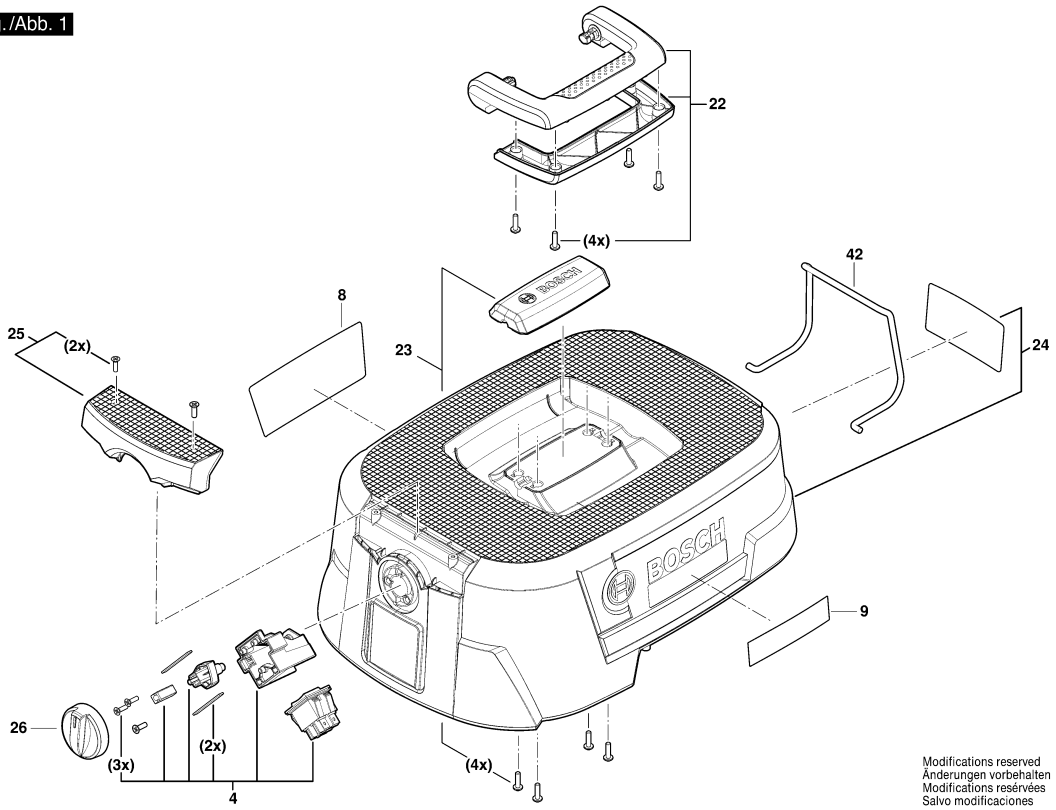

Model: 3 601 J7C 0F0 = 230 | Date:

Item	Pc	Order no.	Description	LP IN INR
1	1	1 619 PB3 211	Motor Housing .	837,00
2	1	1 619 PB3 212	Motor .	3.364,00
4	1	1 619 PA7 289	Switch Kit .	378,00
5	1	1 619 PB5 905	Power supply cord .	
7	1	1 619 PA7 304	Clamping Piece .	34,00
8	1	1 619 PB3 232	Nameplate .	
9	1	1 619 PB3 249	Nameplate GAS 12-25 .	
12	1	1 619 PB3 252	Inductor .	407,00
22	1	1 619 PA7 266	Handle .	165,00
23	1	1 619 PA7 268	Cover .	188,00
24	1	1 619 PA7 269	Cover .	32,00
24	1	1 619 PB3 253	Hood .	1.791,00
25	1	1 619 PA7 268	Cover .	188,00
26	1	1 619 PA7 290	Rotary Knob .	51,00
29	1	1 619 PB3 264	Capacitor .	407,00
30	1	1 619 PB3 265	Cushion .	427,00
31	1	1 619 PB3 266	Sponge .	115,00
32	1	1 619 PB3 267	Seal .	139,00
33	1	1 619 PB3 268	Seal .	295,00
33	1	1 619 PA7 304	Clamping Piece .	34,00
34	1	1 619 PB3 269	Container .	2.166,00
35	2	1 619 PB3 270	Caster Wheel .	727,00
35	1	1 619 PA7 306	Valve .	137,00
36	2	1 619 PB3 271	Wheel .	1.000,00

Item	Pc	Order no.	Description	LP IN INR
37	2	1 619 PB3 272	Latch .	298,00
38	1	1 619 PB3 273	Cable .	181,00
39	1	1 619 PA7 306	Valve .	137,00
40	1	1 619 PB3 274	Cover .	156,00
41	1	1 619 PB3 275	Clamping Ring .	37,00
42	1	1 619 PB3 276	Mounting Bracket .	244,00
43	1	1 619 PB3 277	Housing .	1.081,00
44	1	1 619 PB3 278	Seal .	139,00
44	1	1 619 PA7 316	Filter holder .	222,00
45	1	1 619 PB3 279	Seal .	120,00
46	1	1 619 PB3 280	Seal .	139,00
47	1	1 619 PB3 281	Filter Bracket .	546,00
48	1	1 619 PB3 282	Filter .	1.171,00
49	1	1 619 PA7 316	Filter holder .	222,00
50	1	1 619 PB3 283	Filter .	1.209,00
51	1	1 619 PB3 284	Filter .	231,00
52	15	1 619 PB3 285	Tapping Screw .	37,00
53	1	1 619 PB3 255	Rope .	244,00
651	1	1 619 PB3 826	Hose Vacuuming	1.313,00
340	1	1 619 PC0 025	Container .	
430	1	1 619 PC0 022	Housing .	
440	1	1 619 PC0 023	Seal .	
500	1	1 600 A02 EM2	Filter .	
652	1	1 619 PA7 325	Suction Pipe .	97,00

Please observe: Repairing, modifying and testing of electro-tools are to be performed professionally.The safety regulations according to IEC, EN, VDE, AFNOR and other regulations of the individual countries are to be observed. Subject to change.
This price list supersedes all previous edition. Prices are subjected to change without any prior notice.

3 601 J7C 0K0
Issue Stand 18-06-19 Fig./Abb. 2

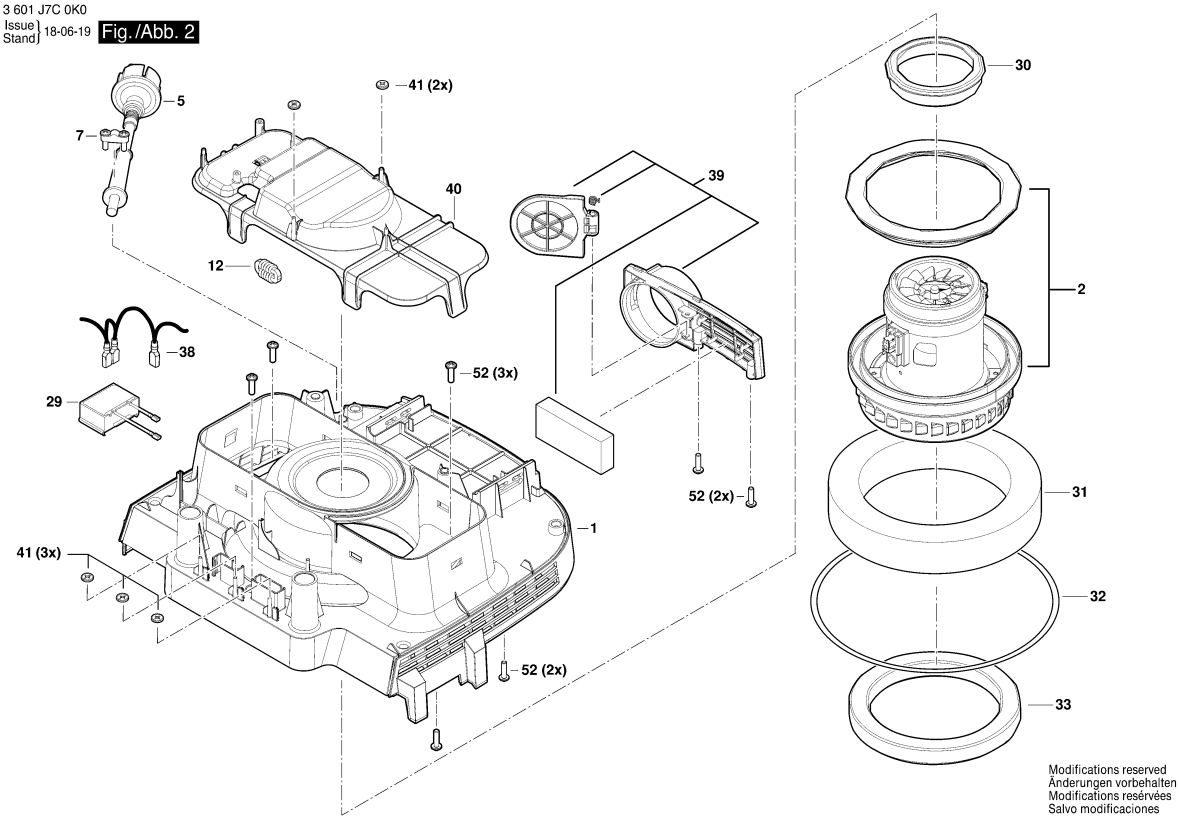

2 / 5

Model: 3 601 J7C 0F0 = 230 | Date:

Item	Pc	Order no.	Description	LP IN INR	Item	Pc	Order no.	Description	LP IN INR
653	1	1 619 PA7 324	Suction Pipe .	817,00					
654	1	1 619 PA7 327	floor nozzle .	439,00					
655	1	1 619 PA7 328	Crevice Nozzle .	131,00					
657	1	1 619 PB3 827	Dust Bag .	304,00					
658	1	1 619 PA7 326	Adapter .	314,00					
659	1	1 619 PB4 751	Dust Bag .						
660	1	1 619 PB4 750	Hose .	992,00					
666	1	1 607 000 EC3	Hose Blowing out	1.244,00					
843	1	1 619 PC0 026	Housing .						

3 601 J7C 0K0
Issue Stand 22-12-12 Fig. /Abb. 3

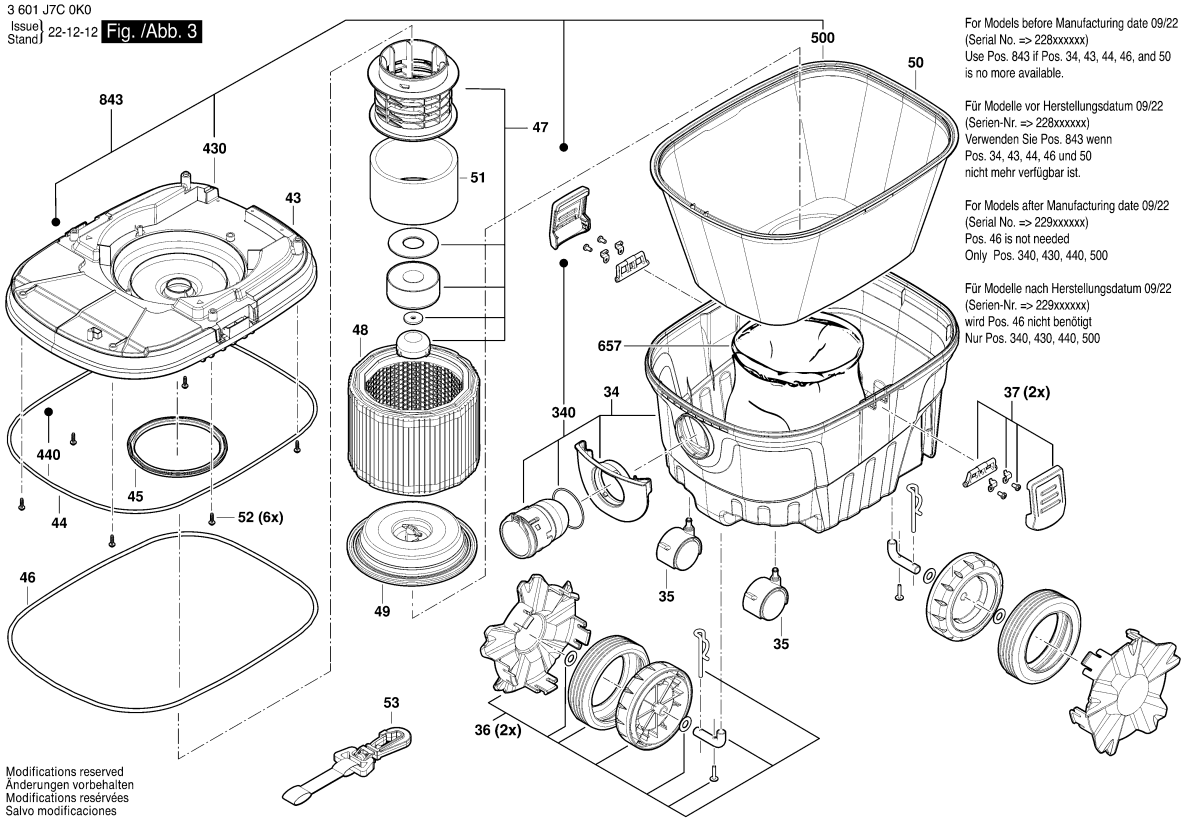

For Models before Manufacturing date 09/22
(Serial No. => 228xxxxxx)
Use Pos. 843 if Pos. 34, 43, 44, 46, and 50
is no more available.

Für Modelle vor Herstellungsdatum 09/22
(Serien-Nr. => 228xxxxxx)
Verwenden Sie Pos. 843 wenn
Pos. 34, 43, 44, 46 und 50
nicht mehr verfügbar ist.

For Models after Manufacturing date 09/22
(Serial No. => 229xxxxxx)
Pos. 46 is not needed
Only Pos. 340, 430, 440, 500

Für Modelle nach Herstellungsdatum 09/22
(Serien-Nr. => 229xxxxxx)
wird Pos. 46 nicht benötigt
Nur Pos. 340, 430, 440, 500

Modifications reserved
Änderungen vorbehalten
Modifications resérvées
Salvo modificaciones

Model: 3 601 J7C 0F0 = 230 | Date:

Item	Pc	Order no.	Description	LP IN INR	Item	Pc	Order no.	Description	LP IN INR

Please observe: Repairing, modifying and testing of electro-tools are to be performed professionally.The safety regulations according to IEC, EN, VDE, AFNOR and other regulations of the individual countries are to be observed. Subject to change.
This price list supersedes all previous edition. Prices are subjected to change without any prior notice.

3 601 J7C 0K0
Issue Stand 19-05-29 Fig./Abb. 4

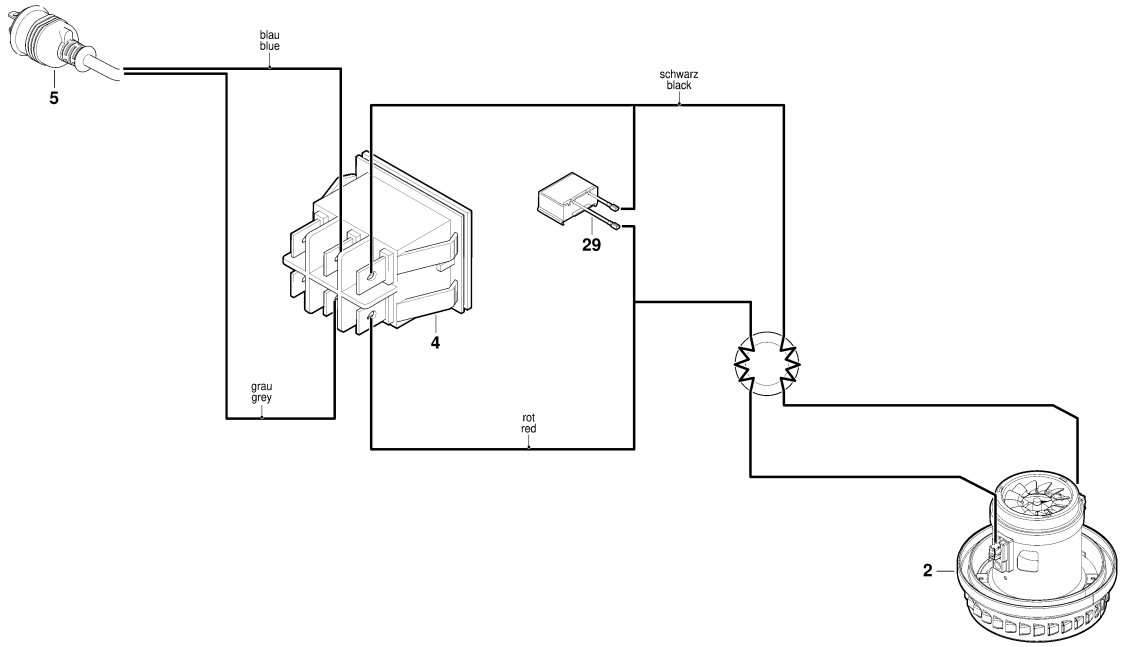

Modifications reserved
Änderungen vorbehalten
Modifications resérvées
Salvo modificaciones

4 / 5

Model: 3 601 J7C 0F0 = 230	Date:

Item	Pc	Order no.	Description	LP IN INR	Item	Pc	Order no.	Description	LP IN INR

3 601 J7C 0K0
Issue / Stand 21-10-22 Fig./Abb. 5

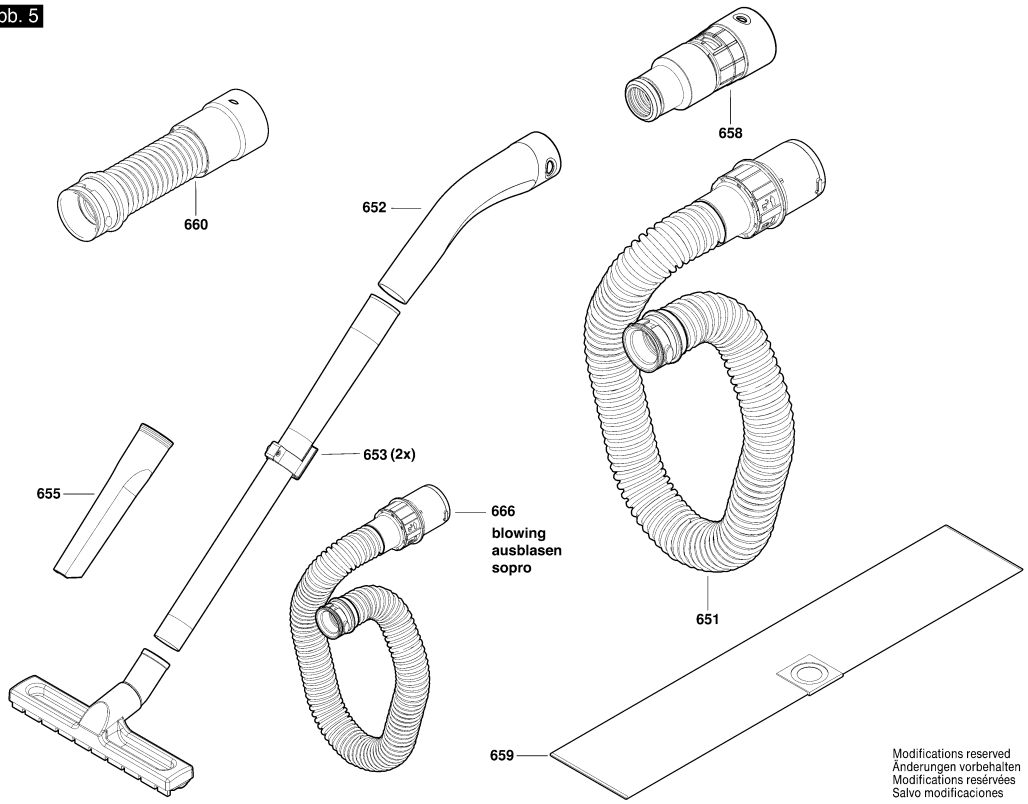

5 / 5

Model: 3 601 J7C 0F0 = 230 | Date:

Item	Pc	Order no.	Description	LP IN INR	Item	Pc	Order no.	Description	LP IN INR

BOSCH Power Tools	Industrial vacuum cleaner	Model GAS 15 PS 3 601 JE5 1F0 | BO

3 601 JE5 100
Issue Stand 19-05-29 Fig. /Abb. 1

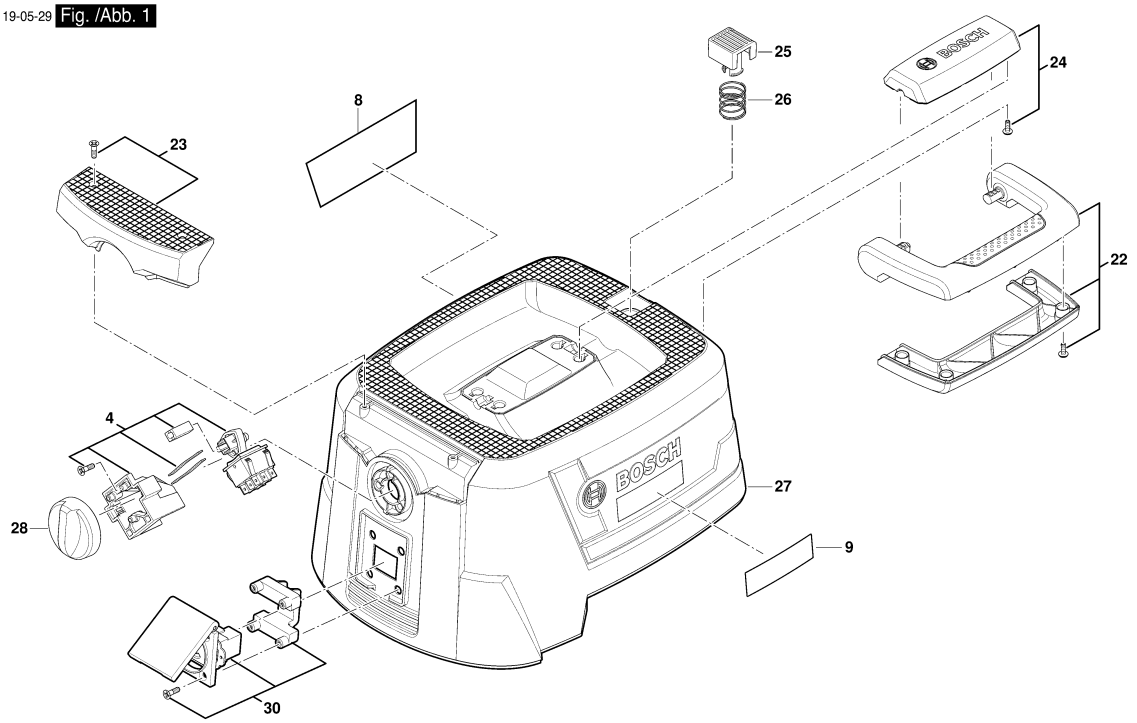

Modifications reserved
Änderungen vorbehalten
Modifications reservées
Salvo modificaciones

Model: 3 601 JE5 1F0 = 230 | Date:

Item	Pc	Order no.	Description	LP IN INR
4	1	1 600 A01 ZM8	Switch Kit .	573,00
5	1	1 619 PB5 633	Power supply cord .	
8	1	1 619 PB5 637	Nameplate .	
9	1	1 619 PB2 133	Manufacturer's nameplate	
22	1	1 619 PA7 266	Handle .	165,00
23	1	1 619 PA7 267	Cover .	139,00
24	1	1 619 PA7 269	Cover .	32,00
25	1	1 619 PA7 270	Button .	32,00
26	1	1 619 PA7 271	Compression Spring .	32,00
27	1	1 619 PA7 280	Hood .	1.259,00
28	1	1 619 PA7 290	Rotary Knob .	51,00
30	1	1 619 PB5 634	Socket .	
31	1	1 600 A01 ZN0	Electronics Module .	1.808,00
32	1	1 619 PA7 301	Seal .	52,00
33	1	1 619 PA7 304	Clamping Piece .	34,00
34	1	1 619 PA7 305	Connecting Rod .	35,00
35	1	1 619 PA7 306	Valve .	137,00
36	1	1 619 PA7 307	Motor Housing .	947,00
38	1	1 619 PA7 310	Motor .	3.649,00
39	1	1 619 PA7 311	Seal Kit .	325,00
40	1	1 619 PA7 312	Seal .	35,00
41	1	1 619 PA7 313	Housing .	686,00
42	1	1 619 PA7 314	Seal Ring .	109,00
43	1	1 619 PA7 315	Filter .	600,00

Item	Pc	Order no.	Description	LP IN INR
44	1	1 619 PA7 316	Filter holder .	222,00
45	2	1 619 PA7 318	Latch .	215,00
46	2	1 619 PA7 319	Caster Wheel .	187,00
47	2	1 619 PA7 320	Caster Wheel .	220,00
48	1	1 619 PA7 331	Container .	1.219,00
50	1	1 619 PA7 410	Filter Bracket .	281,00
61	1	1 619 PA8 370	Filter bag .	244,00
651	1	1 619 PA7 322	Hose Vacuuming	1.660,00
652	1	1 619 PA7 325	Suction Pipe .	97,00
653	2	1 619 PA7 324	Suction Pipe .	817,00
654	1	1 619 PA7 327	floor nozzle .	439,00
655	1	1 619 PA7 328	Crevice Nozzle .	131,00
656	1	1 619 PA7 285	Filter .	138,00
657	1	1 619 PA7 329	Dust Bag .	60,00
658	1	1 619 PA7 326	Adapter .	314,00
666	1	1 607 000 EC3	Hose Blowing out	1.244,00
810	1	1 619 PA7 345	Carbon-Brush Set .	361,00

Please observe: Repairing, modifying and testing of electro-tools are to be performed professionally.The safety regulations according to IEC, EN, VDE, AFNOR and other regulations of the individual countries are to be observed. Subject to change.
This price list supersedes all previous edition. Prices are subjected to change without any prior notice.

3 601 JE5 100
Issue / Stand 15-11-18 Fig./Abb. 2

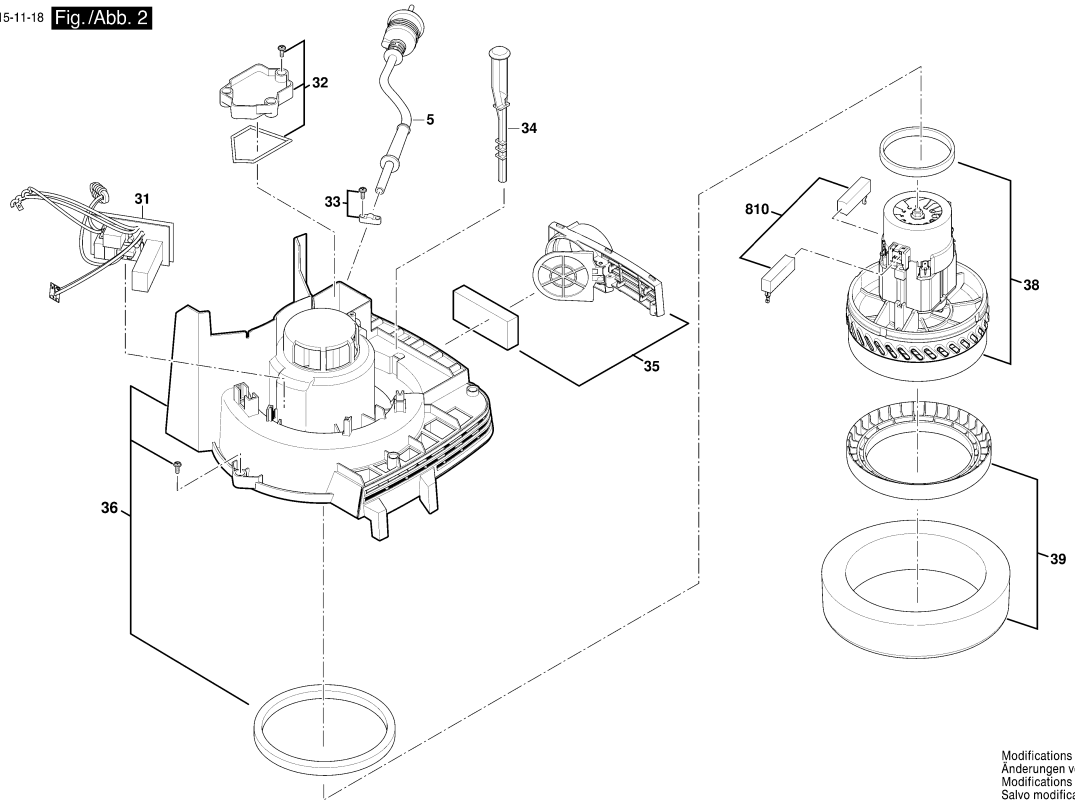

Modifications reserved
Änderungen vorbehalten
Modifications resérvées
Salvo modificaciones

2 / 5

Model: 3 601 JE5 1F0 = 230 | Date:

Item	Pc	Order no.	Description	LP IN INR	Item	Pc	Order no.	Description	LP IN INR

3 601 JE5 100
Issue Stand 21-03-31 Fig. /Abb. 3

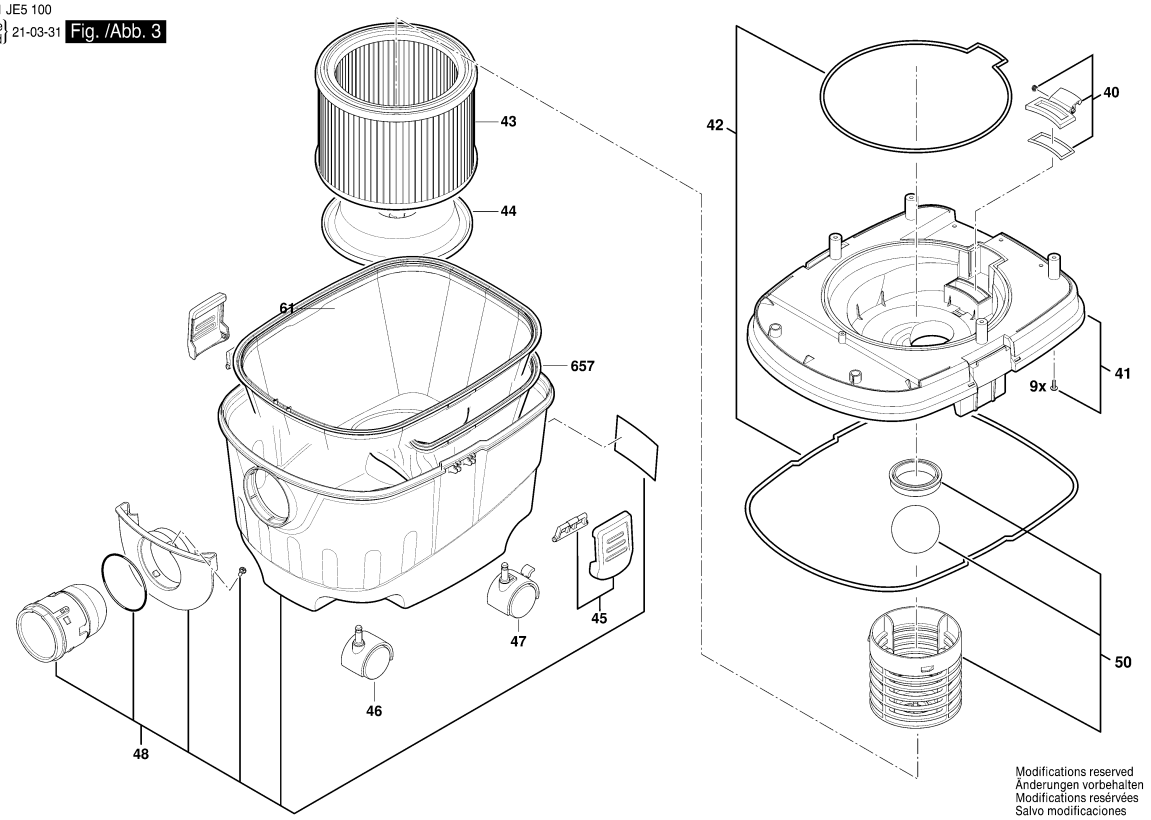

Model: 3 601 JE5 1F0 = 230 | Date:

Item	Pc	Order no.	Description	LP IN INR	Item	Pc	Order no.	Description	LP IN INR

Please observe: Repairing, modifying and testing of electro-tools are to be performed professionally.The safety regulations according to IEC, EN, VDE, AFNOR and other regulations of the individual countries are to be observed. Subject to change.
This price list supersedes all previous edition. Prices are subjected to change without any prior notice.

3 601 JE5 100
Issue Stand 19-05-29 Fig./Abb. 4

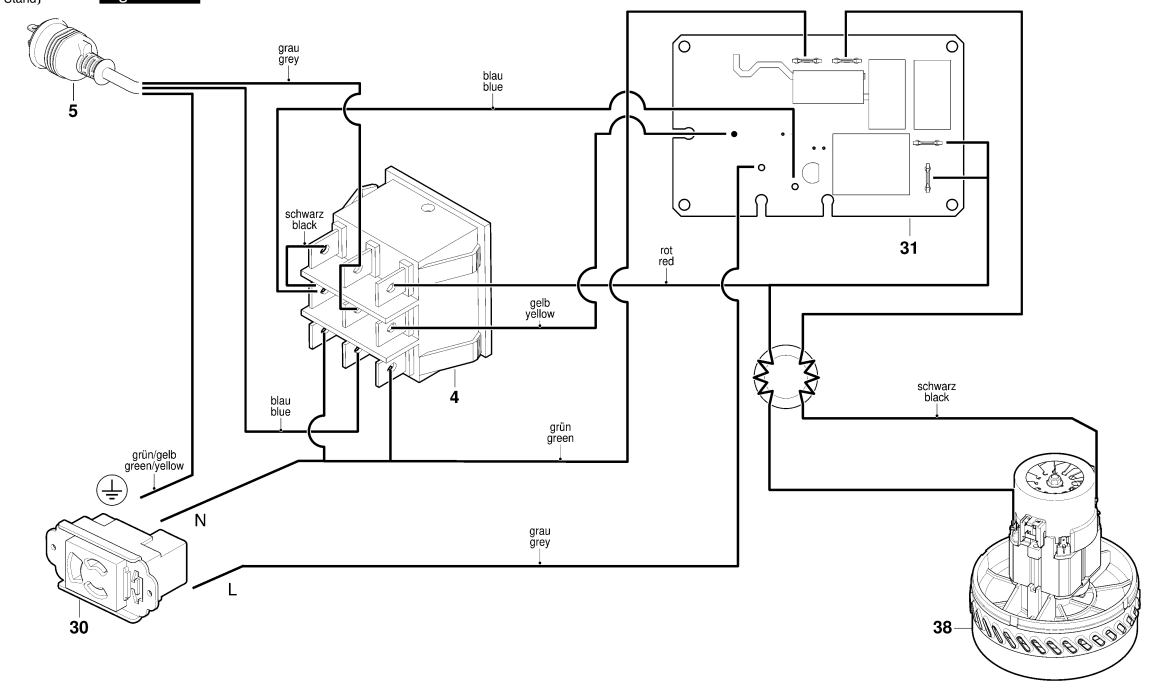

Modifications reserved
Änderungen vorbehalten
Modifications resérvées
Salvo modificaciones

Model: 3 601 JE5 1F0 = 230	Date:

Item	Pc	Order no.	Description	LP IN INR	Item	Pc	Order no.	Description	LP IN INR

Please observe: Repairing, modifying and testing of electro-tools are to be performed professionally.The safety regulations according to IEC, EN, VDE, AFNOR and other regulations of the individual countries are to be observed. Subject to change.
This price list supersedes all previous edition. Prices are subjected to change without any prior notice.

3 601 JE5 100
Issue / Stand 21-10-22 Fig./Abb. 5

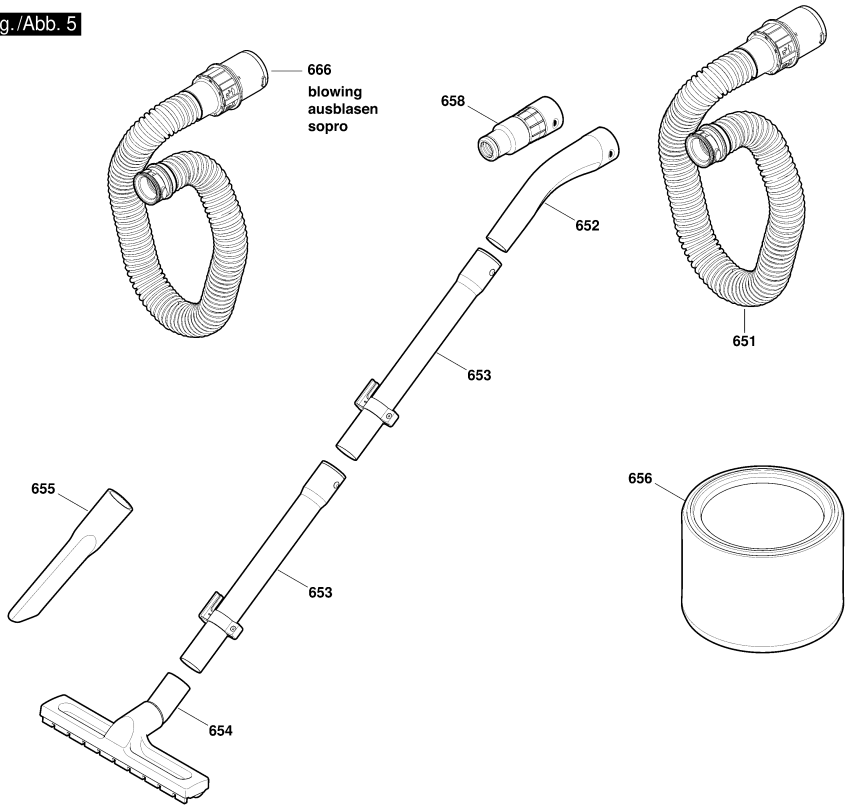

Modifications reserved
Änderungen vorbehalten
Modifications resérvées
Salvo modificaciones

Model: 3 601 JE5 1F0 = 230 | Date:

Item	Pc	Order no.	Description	LP IN INR	Item	Pc	Order no.	Description	LP IN INR

Please observe: Repairing, modifying and testing of electro-tools are to be performed professionally.The safety regulations according to IEC, EN, VDE, AFNOR and other regulations of the individual countries are to be observed. Subject to change.
This price list supersedes all previous edition. Prices are subjected to change without any prior notice.

3 601 JC3 000
Issue Stand 23-02-13 Fig./Abb. 1

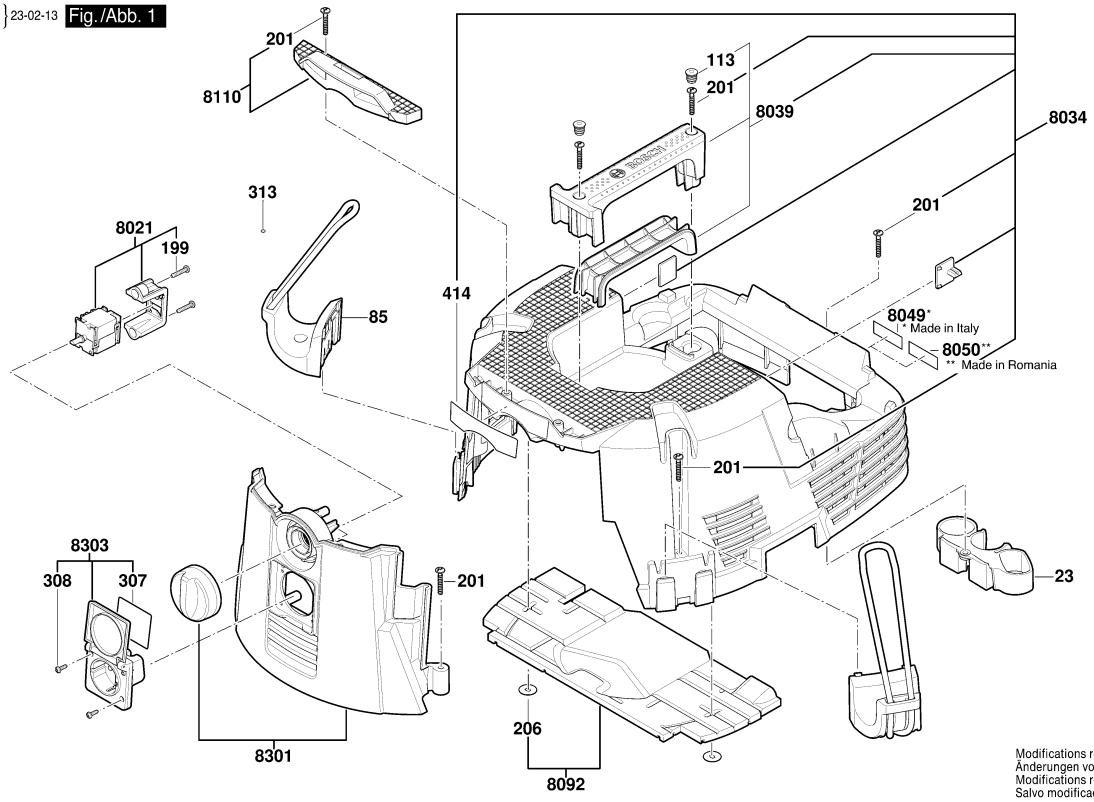

Modifications reserved
Änderungen vorbehalten
Modifications resérvées
Salvo modificaciones

Model: 3 601 JC3 0F0 = 230 | Date:

Item	Pc	Order no.	Description	LP IN INR
15	1	2 609 200 487	Housing .	1.208,00
23	1	2 609 200 453	Support .	193,00
24	2	2 609 200 425	Locking Piece .	202,00
25	1	2 609 200 452	Support .	225,00
28	1	2 609 200 423	Clamping Piece .	216,00
29	1	2 609 200 390	Support .	653,00
37	2	2 609 200 427	Sensor .	356,00
47	1	2 609 200 483	Spring .	305,00
72	1	2 609 200 420	Seal .	356,00
80	1	2 609 200 489	Motor Housing .	1.879,00
85	2	2 609 200 436	Hose Holder .	1.508,00
99	1	2 609 200 424	Cord .	296,00
100	1	2 609 200 392	O-Ring .	48,00
101	1	2 609 200 482	O-Ring .	71,00
105	1	2 609 200 450	Caster Wheel .	570,00
106	1	2 609 200 451	Caster Wheel .	711,00
113	6	2 609 200 406	Plug .	71,00
124	1	2 609 200 569	Ferrite Core .	153,00
125	1	2 609 200 479	Switch .	90,00
154	1	1 619 PB6 629	Power Cable IND .	
190	1	2 607 432 025	Filter .	1.862,00
199	4	2 609 200 422	Screw .	559,00
201	15	2 609 200 410	Screw .	71,00
206	5	2 609 200 414	Positioning Element .	71,00

Item	Pc	Order no.	Description	LP IN INR
208	2	2 609 200 481	Fastening Part .	48,00
215	4	2 609 200 397	Lens Head Screw .	71,00
250	1	2 609 200 454	Clamping Ring .	72,00
251	1	2 609 200 497	Suction Pipe .	478,00
255	1	2 609 200 455	Nozzle .	1.527,00
259	1	2 609 200 462	Nozzle .	307,00
260	1	2 609 200 496	Socket .	1.719,00
307	1	1 619 PB6 632	Sticker 1800W .	
308	2	2 609 200 438	Screw .	71,00
313	1	2 609 200 486	Electrical accessories .	743,00
320	1	2 609 200 456	Bolt .	82,00
322	2	2 609 200 461	Fastening Part .	71,00
414	1	2 609 200 441	Sticker .	0,00
418	1	2 609 200 490	Plate .	201,00
419	1	2 609 200 498	Warning Plate .	
420	2	2 609 200 478	Manufacturer's nameplate	
8020	1	1 607 000 D8X	Support .	208,00
8021	1	2 609 200 388	Switch .	1.816,00
8031	1	2 609 200 493	Housing .	5.775,00
8032	1	2 609 200 477	Cover .	3.648,00
8033	1	2 609 200 391	Cover .	2.229,00
8034	1	2 609 200 430	Hood .	4.222,00
8035	1	2 609 200 488	Container .	4.912,00
8036	1	2 609 200 458	Axle .	604,00

Please observe: Repairing, modifying and testing of electro-tools are to be performed professionally.The safety regulations according to IEC, EN, VDE, AFNOR and other regulations of the individual countries are to be observed. Subject to change.
This price list supersedes all previous edition. Prices are subjected to change without any prior notice.

3 601 JC3 000
Issue / Stand 19-01-21 Fig./Abb. 2

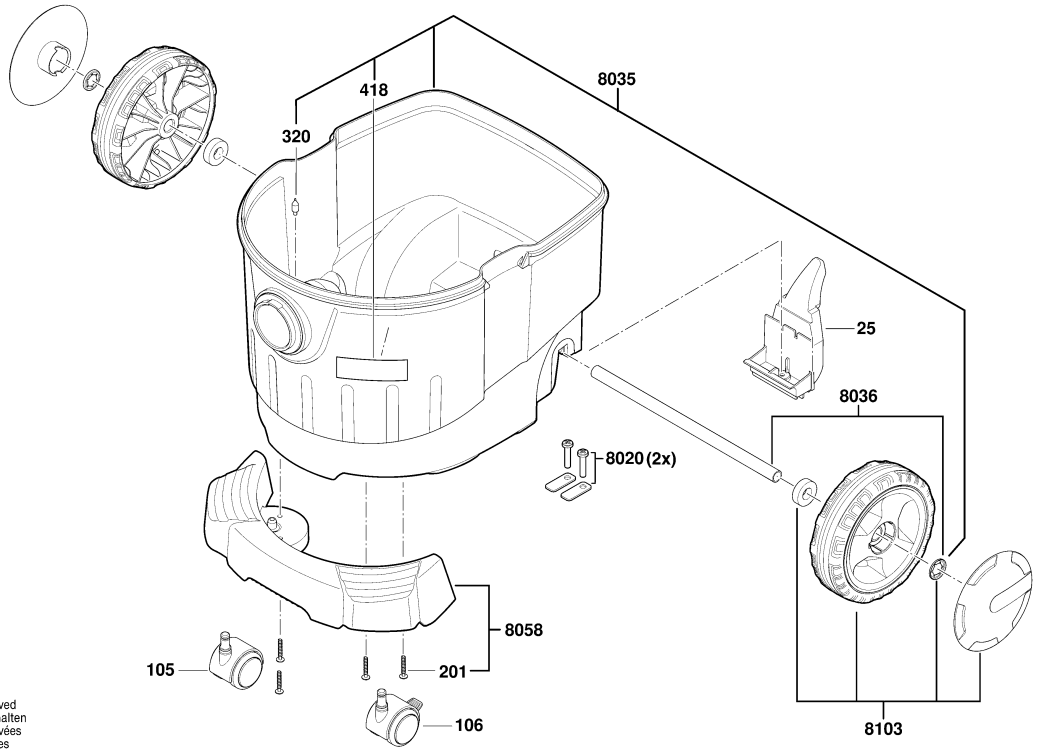

Modifications reserved
Änderungen vorbehalten
Modifications resérvées
Salvo modificaciones

Model: 3 601 JC3 0F0 = 230 | Date:

Item	Pc	Order no.	Description	LP IN INR	Item	Pc	Order no.	Description	LP IN INR
8039	1	2 609 200 444	Handle .	748,00					
8049	1	1 619 PB6 631	Nameplate GAS 35 L SFC+						
8058	1	2 609 200 449	Bumper .	1.410,00					
8068	1	2 609 200 431	Seal Kit .	1.155,00					
8075	1	2 609 200 480	Valve Plate .	4.226,00					
8090	1	2 609 200 413	Sound Insulation Mat .	854,00					
8092	1	2 609 200 437	Sound Insulation Mat .	517,00					
8103	2	2 609 200 432	Wheel .	1.274,00					
8107	1	2 609 200 415	Motor .	8.787,00					
8110	1	2 609 200 435	Holder .	512,00					
8111	1	2 609 200 407	Holder .	567,00					
8113	1	2 609 200 405	Fastening parts kit .	515,00					
8115	1	2 609 200 393	Filter Cover .	875,00					
8161	1	2 609 200 412	Cable .	500,00					
8162	1	2 609 200 570	Cable .						
8175	1	2 609 200 386	Wafer .	3.792,00					
8257	1	2 608 000 A09	Hose .	4.984,00					
8301	1	2 609 200 484	Operator Panel .	1.535,00					
8321	1	2 609 200 428	Spring Housing .	659,00					

Please observe: Repairing, modifying and testing of electro-tools are to be performed professionally.The safety regulations according to IEC, EN, VDE, AFNOR and other regulations of the individual countries are to be observed. Subject to change.
This price list supersedes all previous edition. Prices are subjected to change without any prior notice.

3 601 JC3 000
Issue / Stand 13-03-14 Fig./Abb. 3

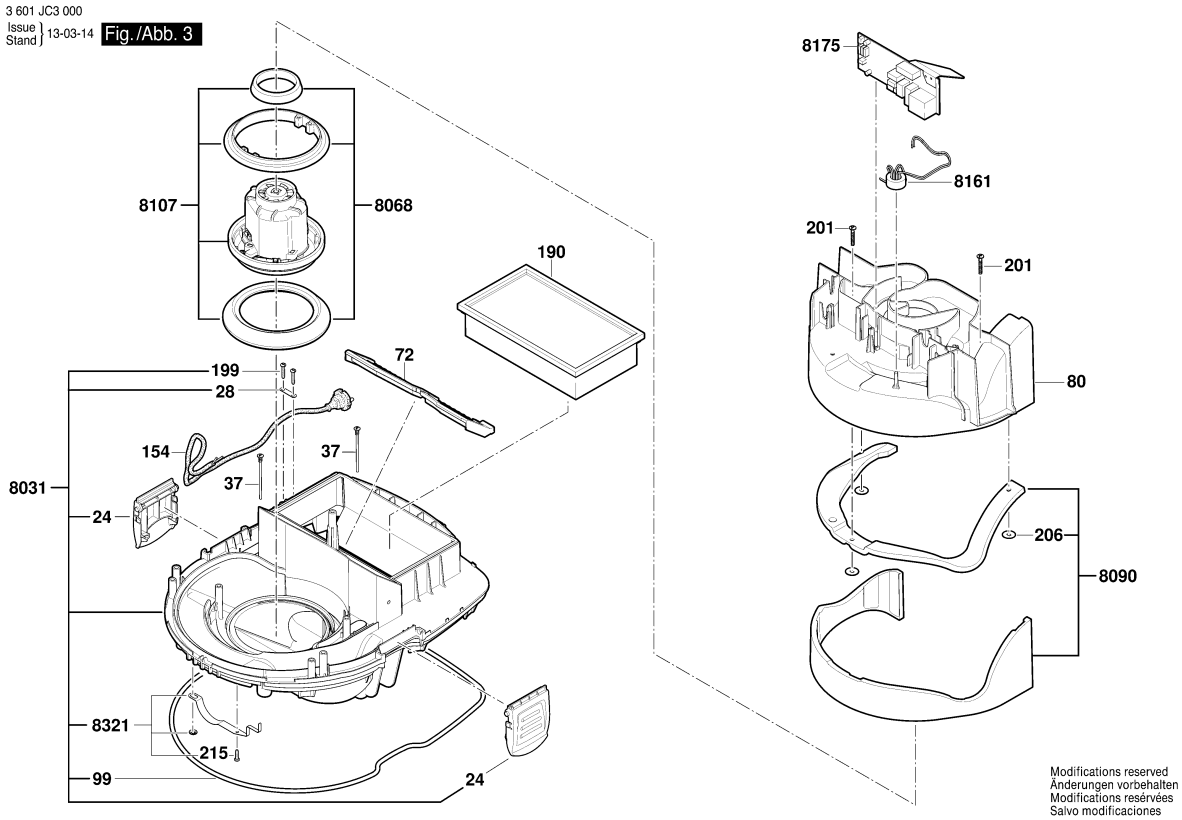

Model: 3 601 JC3 0F0 = 230	Date:

Item	Pc	Order no.	Description	LP IN INR	Item	Pc	Order no.	Description	LP IN INR

Please observe: Repairing, modifying and testing of electro-tools are to be performed professionally.The safety regulations according to IEC, EN, VDE, AFNOR and other regulations of the individual countries are to be observed. Subject to change.
This price list supersedes all previous edition. Prices are subjected to change without any prior notice.

3 601 JC3 000
Issue Stand 13-03-14 Fig./Abb. 4

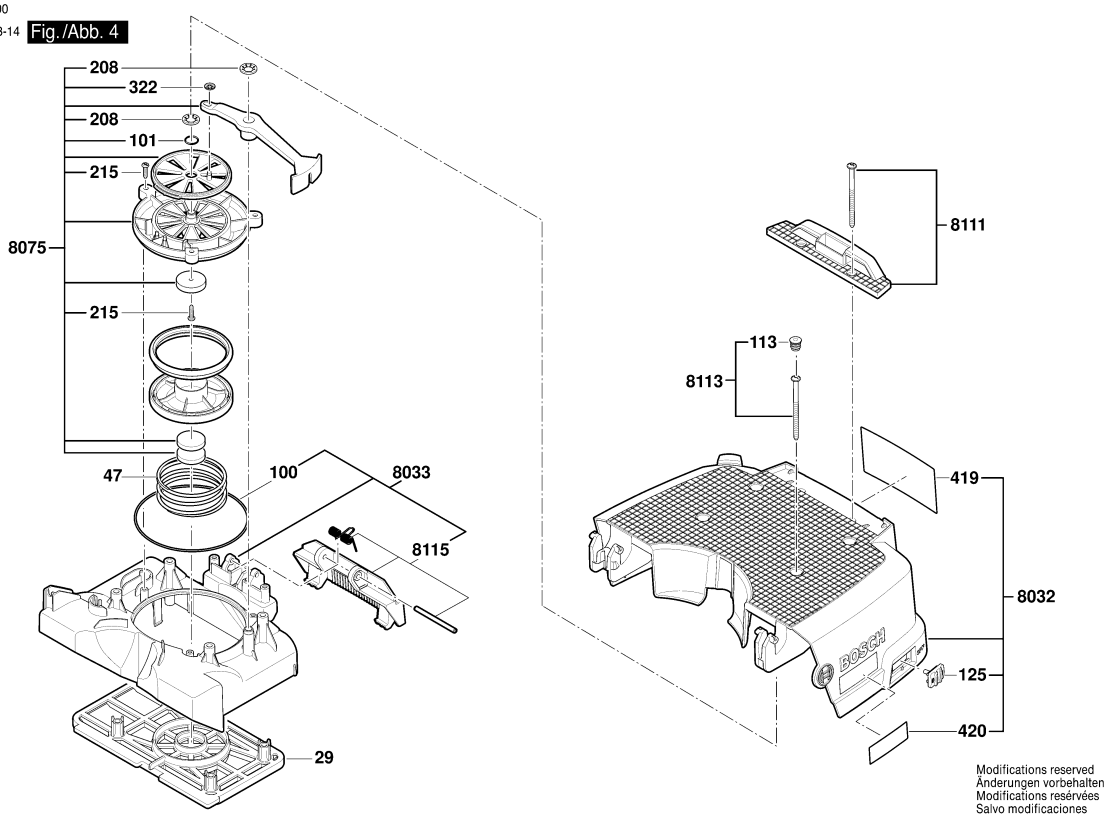

Modifications reserved
Änderungen vorbehalten
Modifications reservées
Salvo modificaciones

Model: 3 601 JC3 0F0 = 230 | Date:

Item	Pc	Order no.	Description	LP IN INR	Item	Pc	Order no.	Description	LP IN INR

Please observe: Repairing, modifying and testing of electro-tools are to be performed professionally.The safety regulations according to IEC, EN, VDE, AFNOR and other regulations of the individual countries are to be observed. Subject to change.
This price list supersedes all previous edition. Prices are subjected to change without any prior notice.

3 601 JC3 000
Issue Stand 14-02-17 Fig./Abb. 5

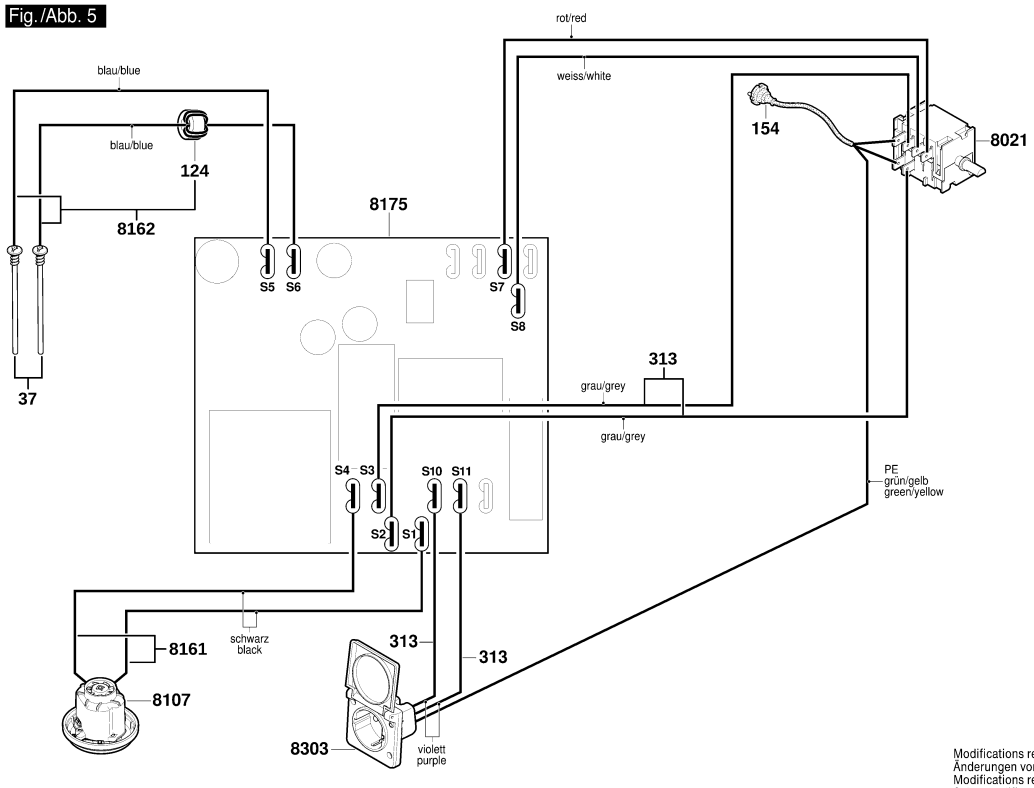

Modifications reserved
Änderungen vorbehalten
Modifications resérvées
Salvo modificaciones

Model: 3 601 JC3 0F0 = 230	Date:

Item	Pc	Order no.	Description	LP IN INR	Item	Pc	Order no.	Description	LP IN INR

Please observe: Repairing, modifying and testing of electro-tools are to be performed professionally.The safety regulations according to IEC, EN, VDE, AFNOR and other regulations of the individual countries are to be observed. Subject to change.
This price list supersedes all previous edition. Prices are subjected to change without any prior notice.

3 601 JC3 000
Issue / Stand 13-07-03 Fig./Abb. 6

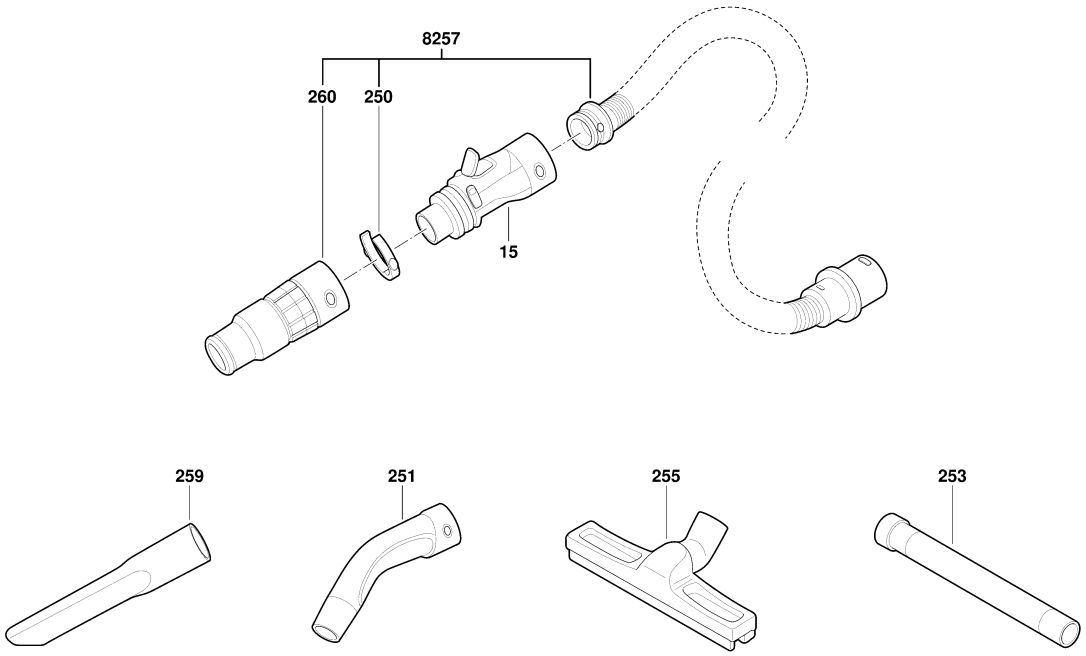

Modifications reserved
Änderungen vorbehalten
Modifications resérvées
Salvo modificaciones

Model: 3 601 JC3 0F0 = 230	Date:

Item	Pc	Order no.	Description	LP IN INR	Item	Pc	Order no.	Description	LP IN INR

Please observe: Repairing, modifying and testing of electro-tools are to be performed professionally.The safety regulations according to IEC, EN, VDE, AFNOR and other regulations of the individual countries are to be observed. Subject to change.
This price list supersedes all previous edition. Prices are subjected to change without any prior notice.

BOSCH Power Tools	All Purpose Vacuum Cleane	Model GAS 55 M AFC 3 601 JC3 3F0 | BO

3 601 JC3 300
Issue / Stand 23-02-13 Fig./Abb. 1

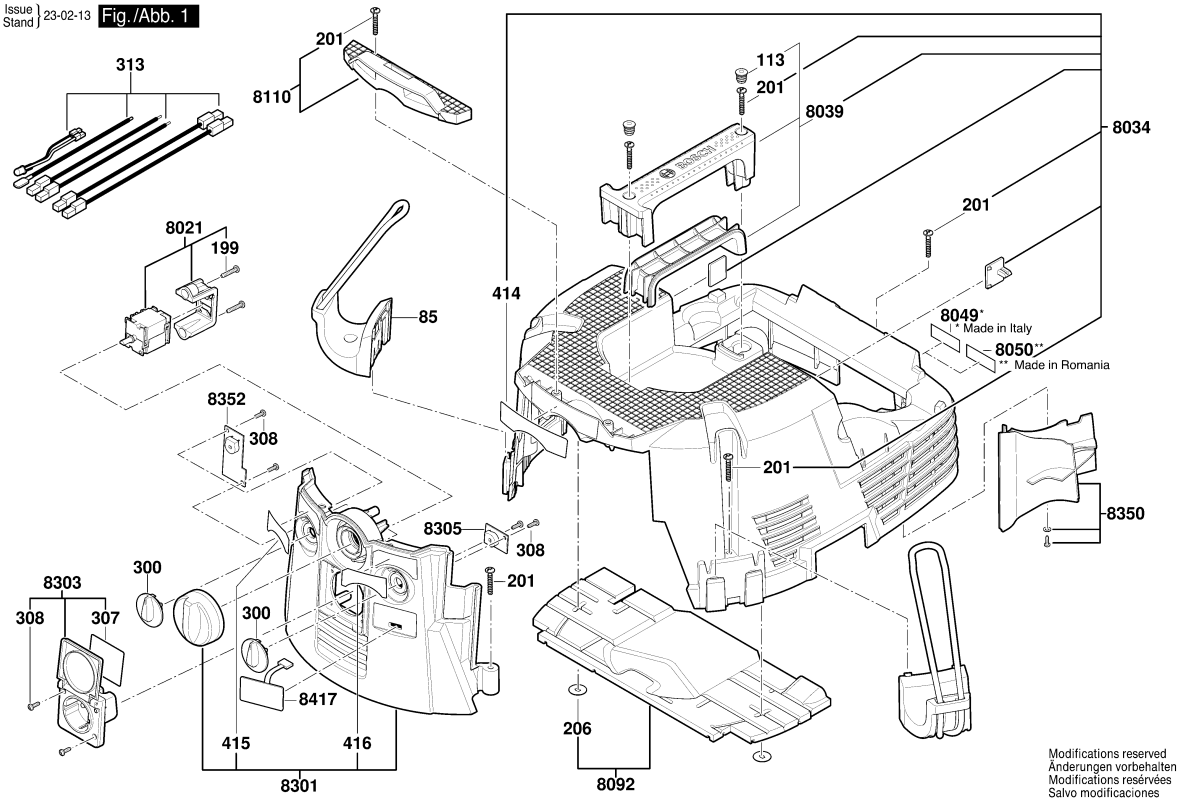

Model: 3 601 JC3 3F0 = 240 | Date:

Item	Pc	Order no.	Description	LP IN INR
24	2	2 609 200 425	Locking Piece .	202,00
27	1	2 609 200 401	Magnet .	176,00
28	1	2 609 200 423	Clamping Piece .	216,00
29	1	2 609 200 390	Support .	653,00
37	2	2 609 200 427	Sensor .	356,00
47	1	2 609 200 483	Spring .	305,00
53	1	2 609 200 464	Support .	539,00
54	1	2 609 200 465	Support .	354,00
57	1	2 609 200 466	Strap-Shaped Handle .	2.955,00
72	1	2 609 200 420	Seal .	356,00
80	1	2 609 200 409	Motor Housing .	1.863,00
85	2	2 609 200 436	Hose Holder .	1.508,00
99	1	2 609 200 424	Cord .	296,00
100	1	2 609 200 392	O-Ring .	48,00
113	6	2 609 200 406	Plug .	71,00
124	1	2 609 200 569	Ferrite Core .	153,00
154	1	1 619 PB6 629	Power Cable IND .	
170	1	2 609 200 460	Magnet .	2.782,00
190	1	2 607 432 026	Filter .	4.479,00
199	4	2 609 200 422	Screw .	559,00
201	13	2 609 200 410	Screw .	71,00
204	1	2 609 200 470	Screw .	71,00
205	1	2 609 200 400	Screw .	71,00
206	5	2 609 200 414	Positioning Element .	71,00

Item	Pc	Order no.	Description	LP IN INR
210	1	2 609 200 399	Serrated Lock-Washer .	71,00
215	4	2 609 200 397	Lens Head Screw .	71,00
239	2	1 603 430 0AN	Screw .	47,00
250	1	2 609 200 454	Clamping Ring .	72,00
251	1	2 608 000 A13	Pipe Elbow .	612,00
253	1	2 608 000 A15	Suction Pipe .	1.424,00
255	1	2 609 200 455	Nozzle .	1.527,00
259	1	2 609 200 462	Nozzle .	307,00
260	1	2 609 200 463	Socket .	2.158,00
300	2	2 609 200 445	Rotary Knob .	48,00
307	1	1 619 PB6 632	Sticker 1800W .	
308	7	2 609 200 438	Screw .	71,00
313	1	2 609 200 439	Electrical accessories .	788,00
320	1	2 609 200 456	Bolt .	82,00
322	2	2 609 200 461	Fastening Part .	71,00
332	1	2 609 200 457	Seal Ring .	109,00
351	1	2 609 200 408	Horn .	929,00
353	1	2 609 200 411	Hose .	424,00
414	1	2 609 200 441	Sticker .	
415	1	2 609 200 442	Sticker .	
416	1	2 609 200 443	Sticker .	
418	1	2 609 200 459	Plate .	201,00
419	1	2 609 200 403	Warning Plate .	
420	2	2 609 200 475	Manufacturer's nameplate .	

Please observe: Repairing, modifying and testing of electro-tools are to be performed professionally.The safety regulations according to IEC, EN, VDE, AFNOR and other regulations of the individual countries are to be observed. Subject to change.
This price list supersedes all previous edition. Prices are subjected to change without any prior notice.

3 601 JC3 300
Issue / Stand 21-07-14 Fig./Abb. 2

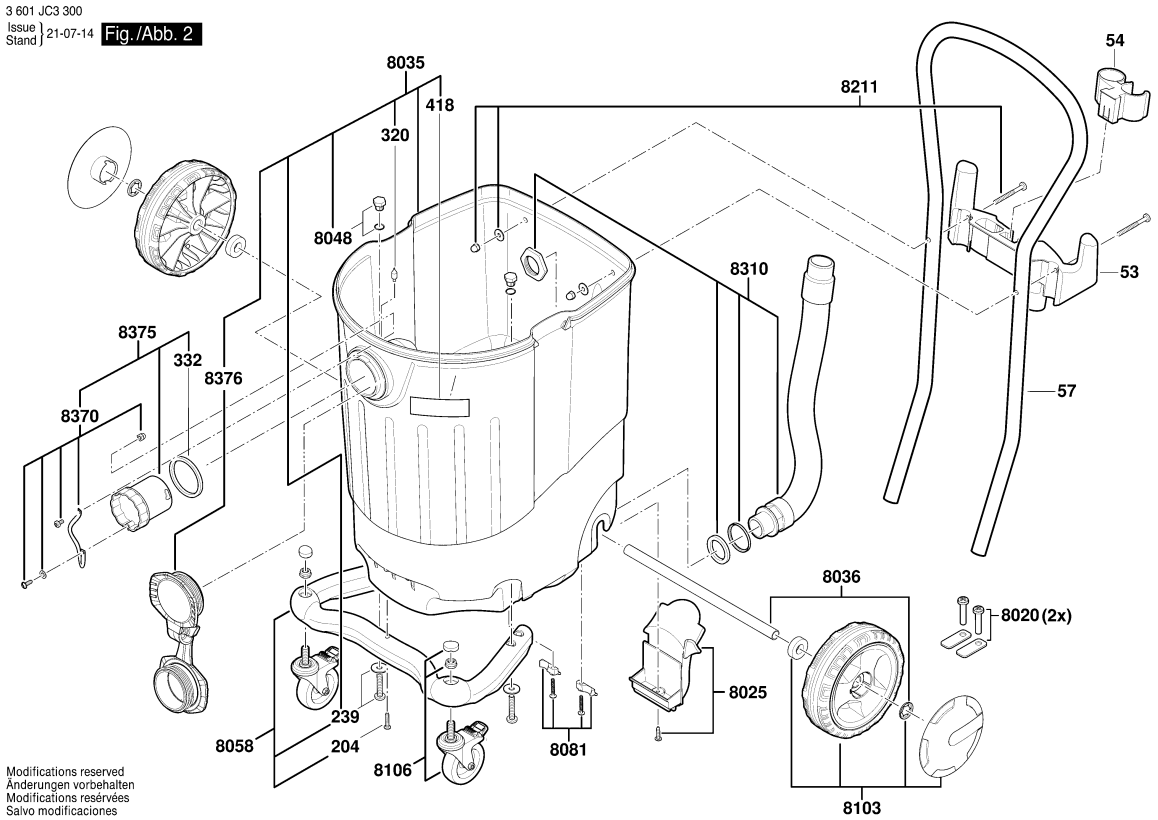

Modifications reserved
Änderungen vorbehalten
Modifications resérvées
Salvo modificaciones

Model: 3 601 JC3 3F0 = 240 | Date:

Item	Pc	Order no.	Description	LP IN INR
8021	1	2 609 200 388	Switch .	1.816,00
8025	1	2 609 200 473	Support .	621,00
8030	1	2 609 200 396	Valve Plate .	1.624,00
8031	1	2 609 200 421	Housing .	6.454,00
8032	1	2 609 200 474	Cover .	3.869,00
8033	1	2 609 200 391	Cover .	2.229,00
8034	1	2 609 200 430	Hood .	4.222,00
8035	1	1 600 A02 8XX	Container .	7.652,00
8036	1	2 609 200 458	Axle .	604,00
8039	1	2 609 200 444	Handle .	748,00
8048	1	2 609 200 468	Fastening parts kit .	440,00
8049	1	1 619 PB6 636	Nameplate GAS 55 M AFC	
8058	1	1 600 A02 8XW	Caster Wheel .	2.458,00
8068	1	2 609 200 431	Seal Kit .	1.155,00
8081	1	2 609 200 472	Support .	553,00
8090	1	2 609 200 413	Sound Insulation Mat .	854,00
8092	1	2 609 200 437	Sound Insulation Mat .	517,00
8103	2	2 609 200 432	Wheel .	1.274,00
8106	1	2 609 200 471	Caster Wheel .	1.903,00
8107	1	2 609 200 415	Motor .	8.787,00
8110	1	2 609 200 435	Holder .	512,00
8111	1	2 609 200 407	Holder .	567,00
8113	1	2 609 200 405	Fastening parts kit .	515,00
8115	1	2 609 200 393	Filter Cover .	875,00

Item	Pc	Order no.	Description	LP IN INR
8160	1	2 609 200 398	Magnet .	3.881,00
8161	1	2 609 200 412	Cable .	500,00
8162	1	1 600 A01 A4J	Cable .	483,00
8175	1	2 609 200 384	Wafer .	9.619,00
8211	1	2 609 200 418	Fastening parts kit .	538,00
8257	1	2 608 000 A06	Hose .	8.544,00
8301	1	2 609 200 440	Operator Panel .	1.860,00
8305	1	2 609 200 383	Wafer .	1.710,00
8310	1	2 609 200 395	Drainage Fitting .	1.552,00
8321	1	2 609 200 428	Spring Housing .	659,00
8350	1	2 609 200 433	Molded Part .	473,00
8352	1	2 609 200 382	Wafer .	4.859,00
8370	1	2 609 200 417	Coupling .	494,00
8375	1	2 609 200 416	Coupling .	1.240,00
8376	1	1 600 A01 A4L	Connection Piece .	1.031,00
8417	1	2 609 200 387	Foil keyboard .	2.109,00

Please observe: Repairing, modifying and testing of electro-tools are to be performed professionally.The safety regulations according to IEC, EN, VDE, AFNOR and other regulations of the individual countries are to be observed. Subject to change.
This price list supersedes all previous edition. Prices are subjected to change without any prior notice.

3 601 JC3 300
Issue / Stand 13-03-14 Fig./Abb. 3

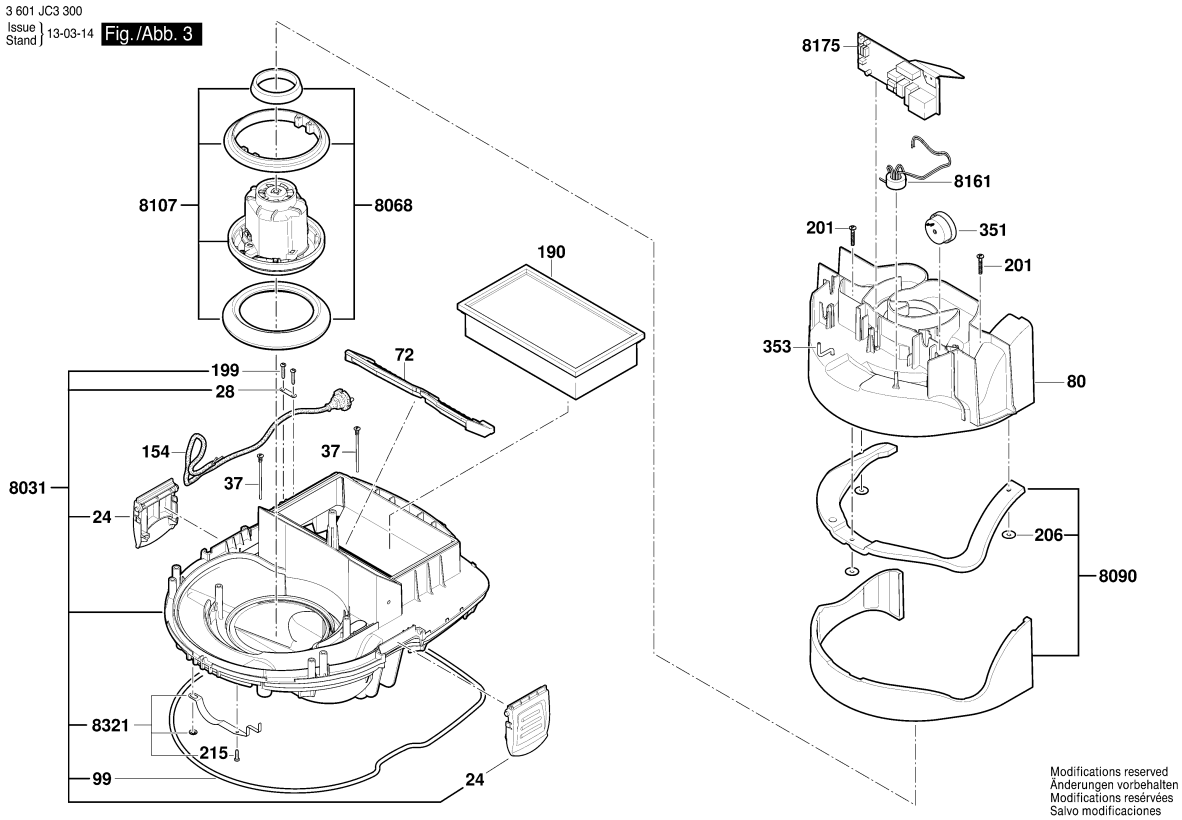

Model: 3 601 JC3 3F0 = 240	Date:

Item	Pc	Order no.	Description	LP IN INR	Item	Pc	Order no.	Description	LP IN INR

Please observe: Repairing, modifying and testing of electro-tools are to be performed professionally.The safety regulations according to IEC, EN, VDE, AFNOR and other regulations of the individual countries are to be observed. Subject to change.
This price list supersedes all previous edition. Prices are subjected to change without any prior notice.

3 601 JC3 300
Issue Stand 23-03-13 Fig./Abb. 4

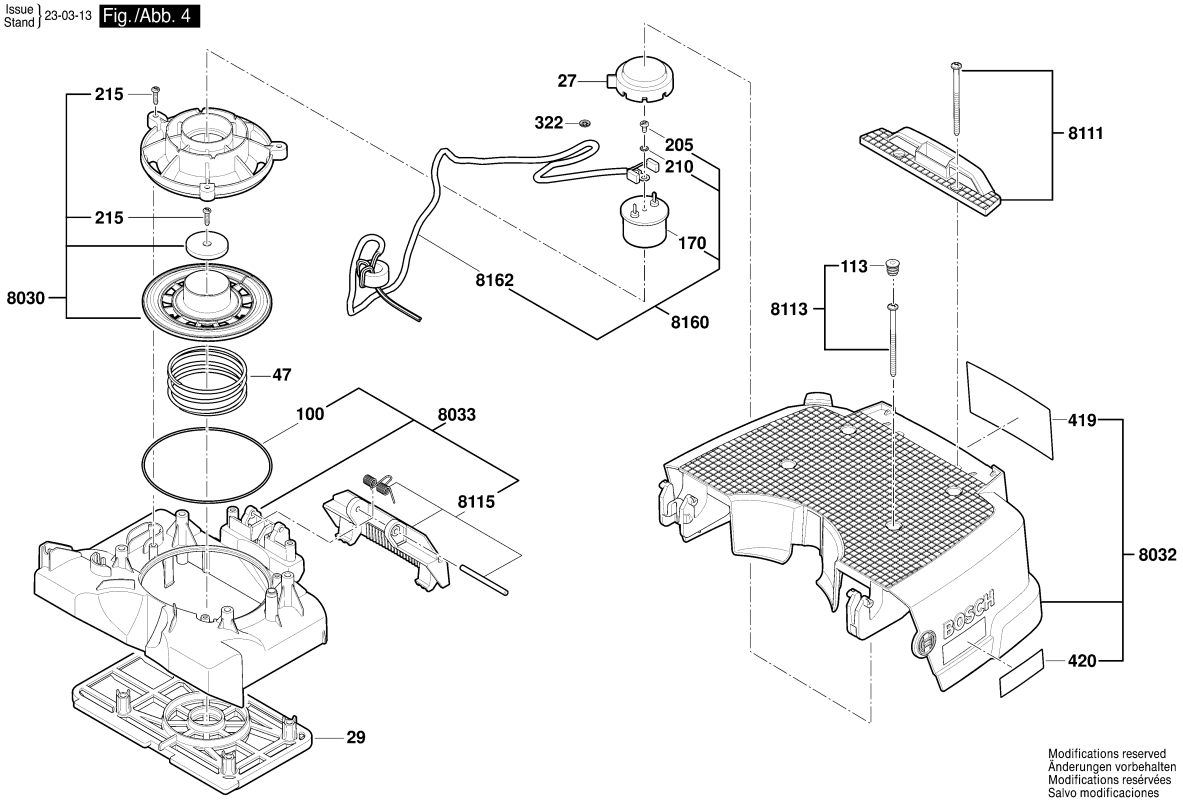

Modifications reserved
Änderungen vorbehalten
Modifications reservées
Salvo modificaciones

Model: 3 601 JC3 3F0 = 240 | Date:

Item	Pc	Order no.	Description	LP IN INR	Item	Pc	Order no.	Description	LP IN INR

Please observe: Repairing, modifying and testing of electro-tools are to be performed professionally.The safety regulations according to IEC, EN, VDE, AFNOR and other regulations of the individual countries are to be observed. Subject to change.
This price list supersedes all previous edition. Prices are subjected to change without any prior notice.

3 601 JC3 300
Issue / Stand 13-04-08 Fig./Abb. 5

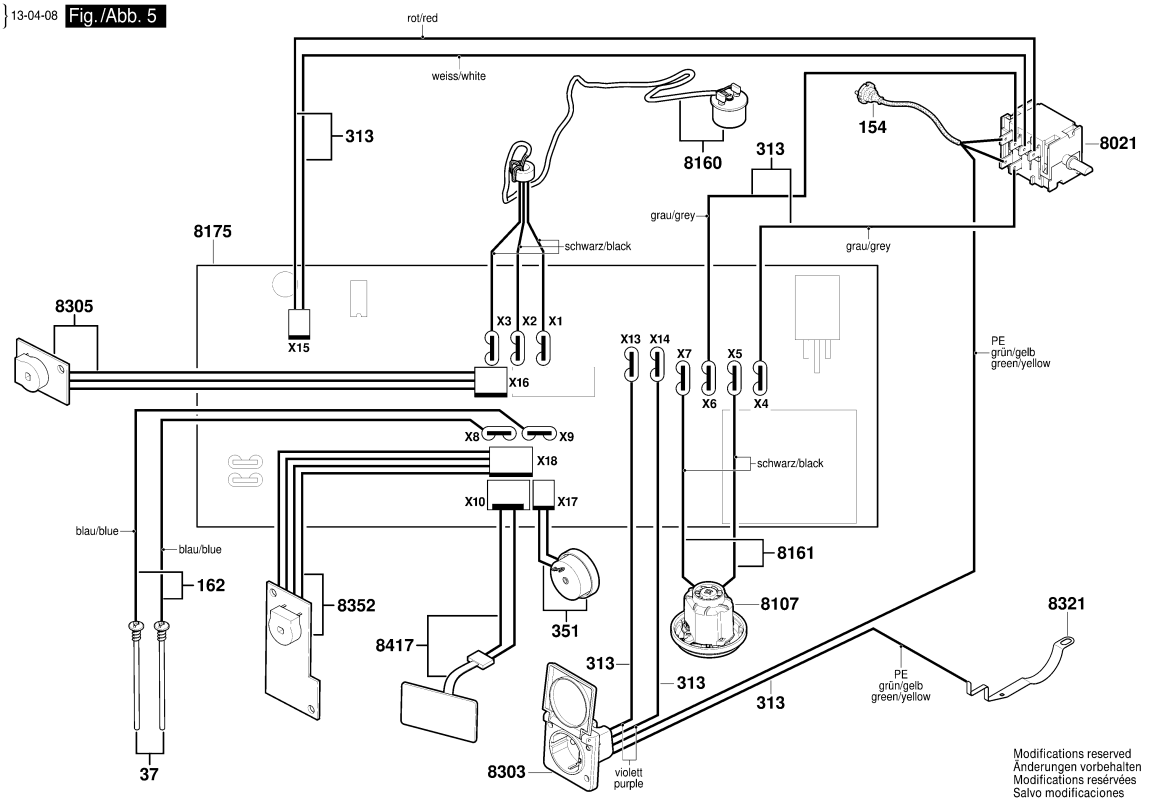

5 / 6

Model: 3 601 JC3 3F0 = 240	Date:

Item	Pc	Order no.	Description	LP IN INR	Item	Pc	Order no.	Description	LP IN INR

Please observe: Repairing, modifying and testing of electro-tools are to be performed professionally.The safety regulations according to IEC, EN, VDE, AFNOR and other regulations of the individual countries are to be observed. Subject to change.
This price list supersedes all previous edition. Prices are subjected to change without any prior notice.

3 601 JC3 300
Issue / Stand 13-02-20 Fig./Abb. 6

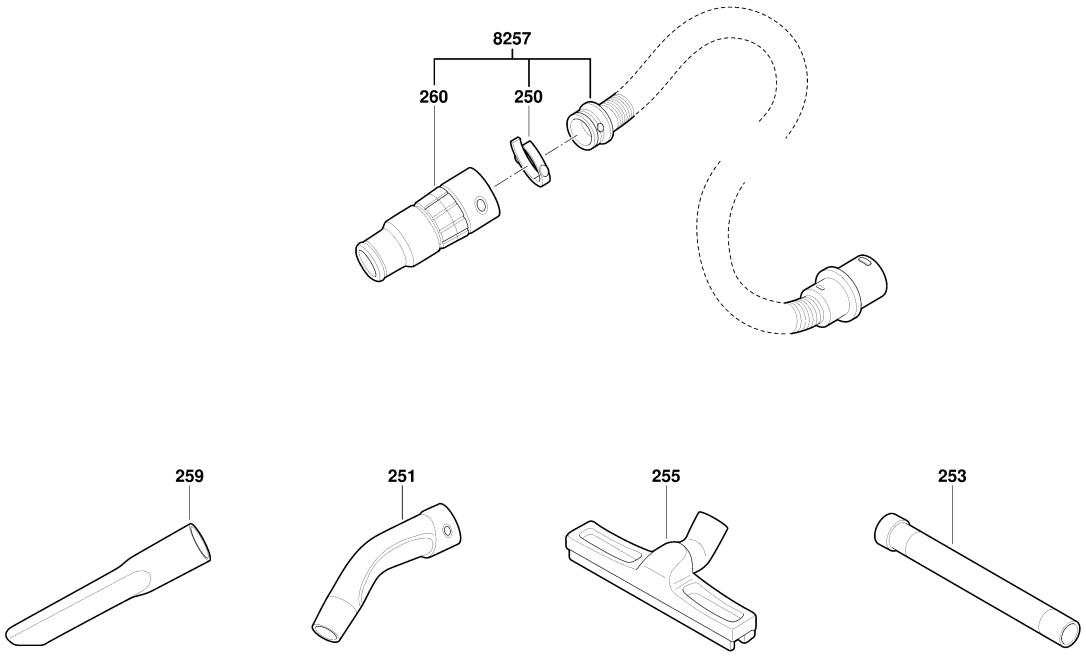

Modifications reserved
Änderungen vorbehalten
Modifications resérvées
Salvo modificaciones

Model: 3 601 JC3 3F0 = 240 | Date:

Item	Pc	Order no.	Description	LP IN INR	Item	Pc	Order no.	Description	LP IN INR

Please observe: Repairing, modifying and testing of electro-tools are to be performed professionally.The safety regulations according to IEC, EN, VDE, AFNOR and other regulations of the individual countries are to be observed. Subject to change.
This price list supersedes all previous edition. Prices are subjected to change without any prior notice.

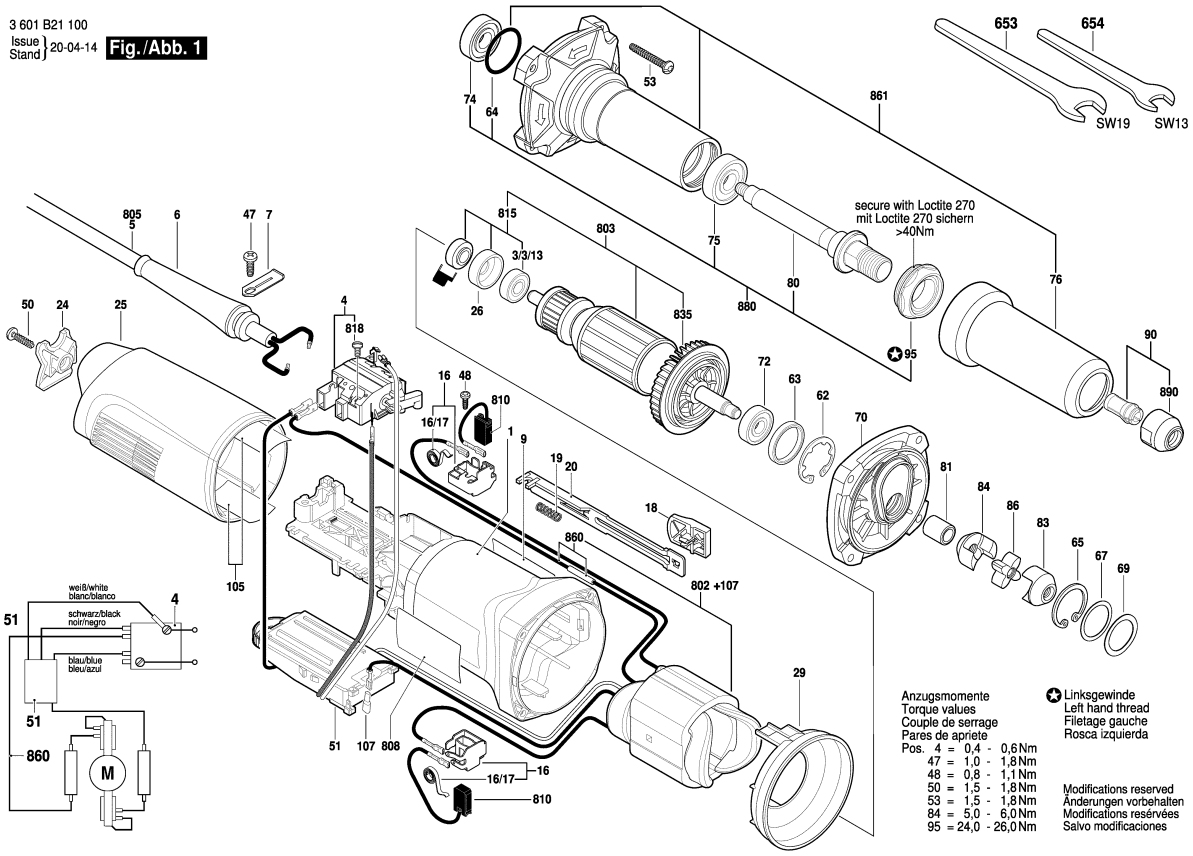

Model: 3 601 B21 100 = 230 | Date:

Item	Pc	Order no.	Description	LP IN INR
1	1	3 605 108 224	Motor Housing .	285,00
3/3/13	1	2 600 905 032	Ball Bearing 7x19x6 .	164,00
4	1	1 607 200 199	Switch .	371,00
6	1	1 600 703 040	Grommet .	69,00
7	1	1 601 302 017	Fastening Clamp .	30,00
9	1	3 601 110 594	Manufacturer's nameplate .	
16	2	1 601 323 025	Brush Holder .	93,00
16/17	1	1 604 652 013	Spiral Spring .	44,00
18	1	1 602 026 088	Switch Handle .	31,00
19	1	1 604 611 026	Compression Spring .	38,00
20	1	1 602 319 010	Adjusting Slide BLACK	48,00
24	1	1 605 500 227	Cover .	62,00
25	1	1 605 500 251	Housing Cover DARK	217,00
26	1	1 600 206 036	Rubber Ring .	46,00
29	1	1 600 591 025	Air-Deflector Ring .	72,00
47	1	2 603 490 021	Torx Oval-Head Screw	30,00
48	2	1 613 435 034	Lens Head Screw 3x10 ST	143,00
50	1	2 603 490 023	Torx Oval-Head Screw	30,00
51	1	1 607 233 452	Speed governor .	3.222,00
53	4	2 603 490 025	Torx Oval-Head Screw	31,00
62	1	1 600 119 011	Retaining clip .	50,00
63	1	1 600 206 025	Rubber Ring .	28,00
64	1	1 610 210 101	O-Ring 26,0x2,0 MM .	63,00
65	1	2 916 660 010	Spring retaining ring DIN	30,00

Item	Pc	Order no.	Description	LP IN INR
67	1	3 600 150 011	Shim .	50,00
69	1	1 710 102 601	Shim 0,10 MM .	65,00
70	1	3 605 700 225	Intermediate Flange .	2.143,00
72	1	1 600 905 032	groove ball bearing 8x22x7	82,00
74	1	3 600 905 156	groove ball bearing	506,00
75	1	3 600 905 157	groove ball bearing .	506,00
76	1	3 605 500 194	Protective Sleeve .	285,00
80	1	3 603 523 070	Grinding Spindle .	1.291,00
81	1	3 600 400 034	Spacer Sleeve .	140,00
83	1	3 606 445 047	Coupling Half .	849,00
84	1	3 606 445 047	Coupling Half .	849,00
86	1	3 606 337 242	Carrier .	30,00
90	1	3 607 030 474	Clamping Unit Ø6 MM .	910,00
95	1	3 600 328 043	Flange LEFTHAND	936,00
105	2	1 601 008 005	Insulating Plate .	82,00
107	1	1 600 712 030	Insulating Part .	45,00
653	1	3 607 950 024	Single-Head Eng. Wrench	314,00
654	1	3 607 950 025	Single-Head Eng. Wrench	271,00
802	1	3 607 030 475	Pole Shoe 230V .	2.470,00
803	1	3 607 030 476	Armature 230V .	3.364,00
805	1	1 607 000 392	Power supply cord EU	3.599,00
808	1	1 601 11A 3H3	Nameplate .	
810	1	1 607 014 176	Carbon-Brush Set .	236,00
810	1	1 607 000 482	Carbon-Brush Set	2.294,00

Please observe: Repairing, modifying and testing of electro-tools are to be performed professionally.The safety regulations according to IEC, EN, VDE, AFNOR and other regulations of the individual countries are to be observed. Subject to change.
This price list supersedes all previous edition. Prices are subjected to change without any prior notice.

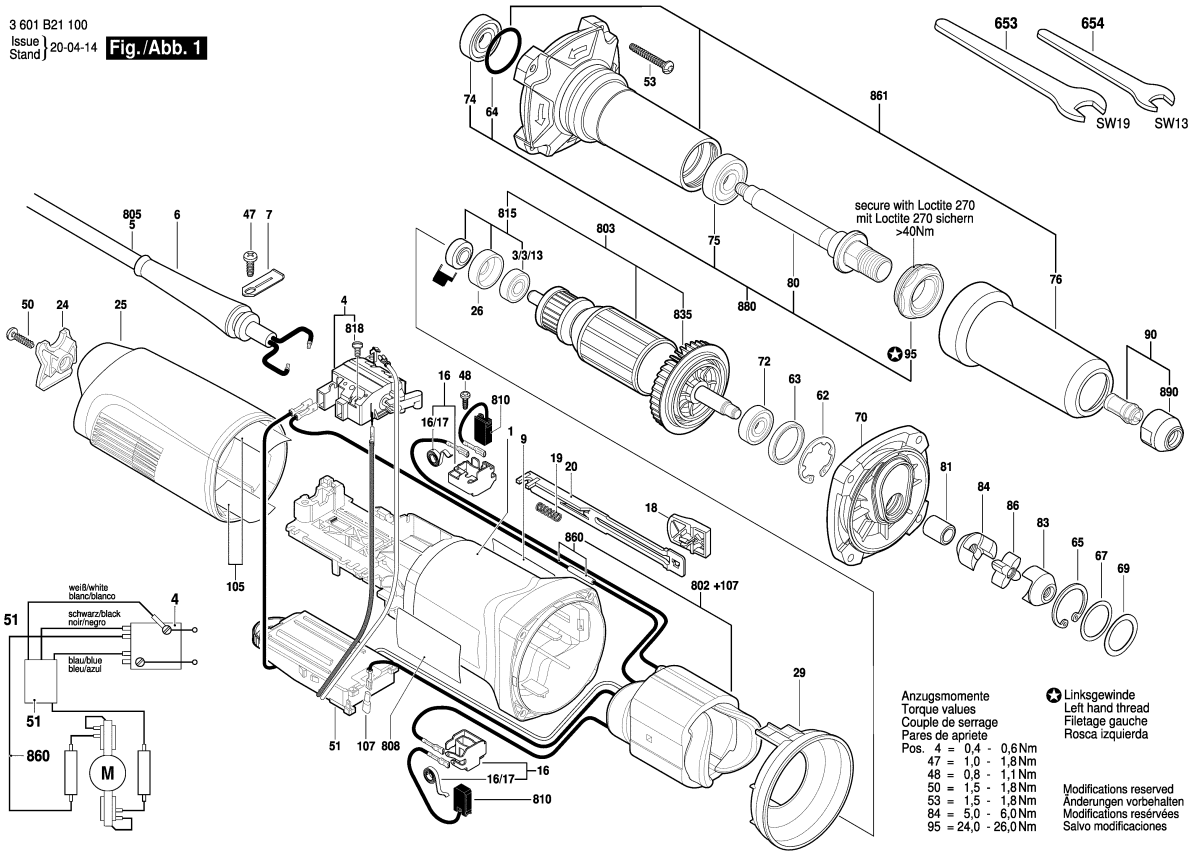

2 / 2

Model: 3 601 B21 100 = 230 | Date:

Item	Pc	Order no.	Description	LP IN INR
815	1	1 607 000 378	Parts Set .	274,00
818	1	2 910 110 048	Pan head screw DIN	31,00
835	1	1 606 610 129	Fan .	62,00
860	1	1 604 448 023	Connecting Cable .	45,00
861	1	3 607 031 668	Spindle Housing .	3.222,00
880	1	3 607 031 667	Grinding Spindle .	5.558,00
890	1	3 603 313 006	Round Nut .	353,00

Item	Pc	Order no.	Description	LP IN INR

Please observe: Repairing, modifying and testing of electro-tools are to be performed professionally.The safety regulations according to IEC, EN, VDE, AFNOR and other regulations of the individual countries are to be observed. Subject to change.
This price list supersedes all previous edition. Prices are subjected to change without any prior notice.

3 601 B24 0K0
Stand ~~12-09~~
Issue 17-12-01
Fig. /Abb. 1

Gerad - Verzahnung

● Vor Demontage des Ankers Kohlebürsten 5mm zurückziehen !

Before the armature is removed the carbon brushes must be withdrawn by at least 5mm !

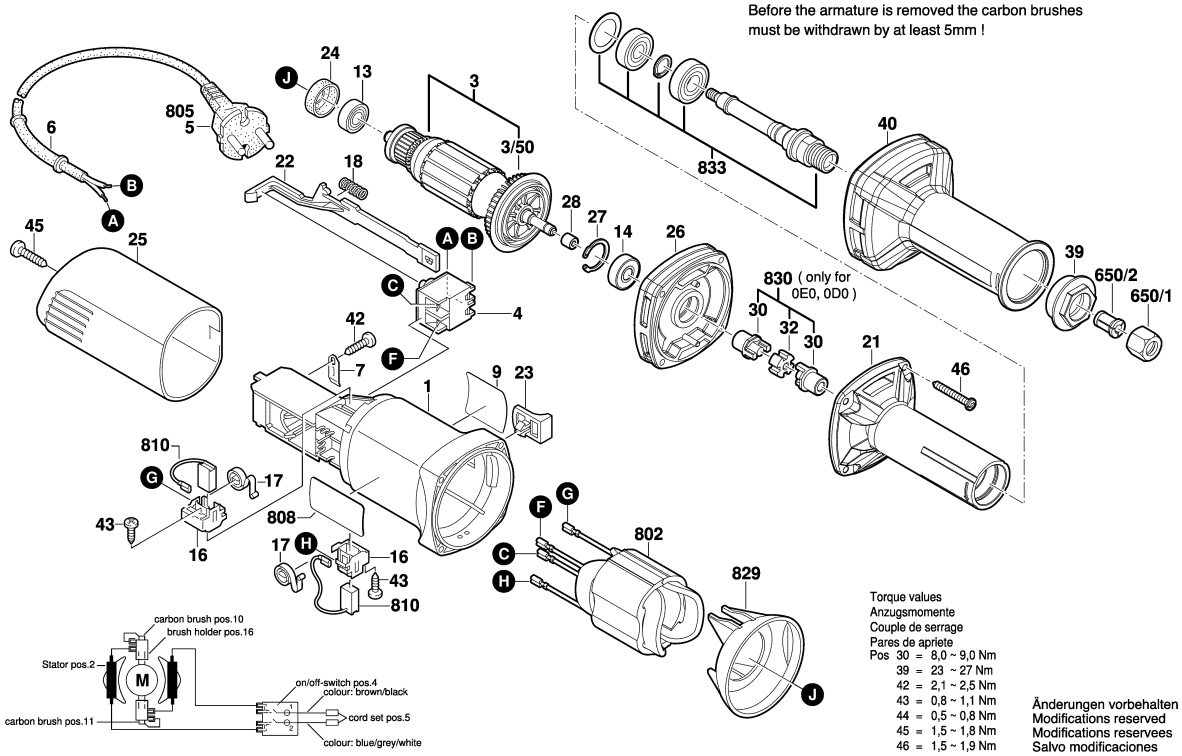

Torque values
Anzugsmomente
Couple de serrage
Pares de apriete
Pos 30 = 8,0 ~ 9,0 Nm
39 = 23 ~ 27 Nm
42 = 2,1 ~ 2,5 Nm
43 = 0,8 ~ 1,1 Nm
44 = 0,5 ~ 0,8 Nm
45 = 1,5 ~ 1,8 Nm
46 = 1,5 ~ 1,9 Nm

Änderungen vorbehalten
Modifications reserved
Modifications reservees
Salvo modificaciones

Model: 3 601 B24 0K0 = 230 | Date:

Item	Pc	Order no.	Description	LP IN INR
1	1	1 619 P11 358	Motor Housing .	831,00
3	1	1 619 P08 203	Armature 230V .	1.178,00
3/50	1	1 606 610 141	Fan .	30,00
4	1	1 607 200 179	On-Off Switch .	128,00
6	1	2 600 703 012	Grommet Ø6,5-Ø6,9x95	25,00
7	1	1 601 302 017	Fastening Clamp .	30,00
9	1	1 619 P09 523	Manufacturer's nameplate	
13	1	1 619 P08 829	groove ball bearing .	210,00
14	1	1 619 P00 455	Ball Bearing .	36,00
16	2	1 619 P01 811	Brush Holder .	30,00
17	2	1 604 652 013	Spiral Spring .	44,00
18	1	1 604 611 031	Compression Spring .	25,00
21	1	1 619 P10 235	Spindle Housing .	1.039,00
22	1	1 602 319 009	Adjusting Slide .	30,00
23	1	1 619 P02 762	Switch Button BLACK	30,00
24	1	1 600 502 023	Intermediate Ring .	68,00
25	1	1 619 P09 255	Housing Cover BLUE	347,00
26	1	1 619 P09 256	Intermediate Flange .	556,00
27	1	1 619 P09 261	Retaining snap ring .	33,00
28	1	1 619 P09 434	Sleeve Ring .	116,00
30	2	1 619 P09 263	Connector .	194,00
32	1	1 619 P09 262	Adjusting Ring .	36,00
39	1	1 619 P11 770	Cap Nut .	160,00
40	1	1 619 P09 268	Protective Sleeve .	160,00

Item	Pc	Order no.	Description	LP IN INR
42	1	2 609 110 052	Special Screw .	45,00
43	2	1 619 P00 220	Torx Oval-Head Screw	30,00
45	1	2 910 611 020	Tapping Screw DIN	44,00
46	4	1 619 P09 269	Torx Oval-Head Screw .	34,00
650/1	1	1 619 P09 252	Lock nut .	358,00
650/2	1	1 619 P10 661	Collet .	198,00
802	1	1 619 P09 833	Field 230V .	949,00
805	1	1 607 000 387	Power supply cord CN	271,00
808	1	1 619 P09 488	Nameplate .	
810	1	1 607 014 145	Carbon-Brush Set .	91,00
829	1	1 600 591 023	Air-Deflector Ring .	34,00
833	1	1 619 P09 253	Spindle Assembly .	1.386,00

Please observe: Repairing, modifying and testing of electro-tools are to be performed professionally.The safety regulations according to IEC, EN, VDE, AFNOR and other regulations of the individual countries are to be observed. Subject to change.
This price list supersedes all previous edition. Prices are subjected to change without any prior notice.

3 601 B24 0K0
Stand ~~12-09~~
Issue 17-12-01

Fig. /Abb. 1

Gerad - Verzahnung

● Vor Demontage des Ankers Kohlebürsten 5mm zurückziehen !

Before the armature is removed the carbon brushes must be withdrawn by at least 5mm !

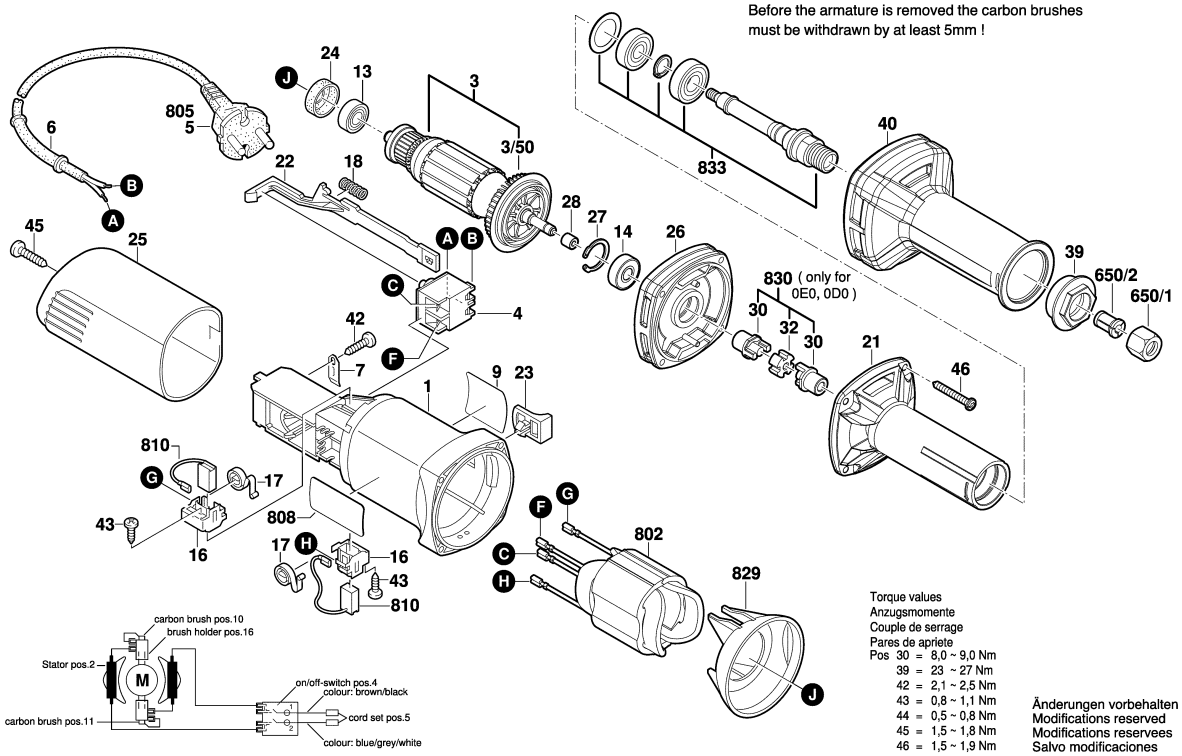

Torque values
Anzugsmomente
Couple de serrage
Pares de apriete

Pos			
30	=	8,0 ~ 9,0	Nm
39	=	23 ~ 27	Nm
42	=	2,1 ~ 2,5	Nm
43	=	0,8 ~ 1,1	Nm
44	=	0,5 ~ 0,8	Nm
45	=	1,5 ~ 1,8	Nm
46	=	1,5 ~ 1,9	Nm

Änderungen vorbehalten
Modifications reserved
Modifications reservees
Salvo modificaciones

Model: 3 601 B24 1K0 = 230 | Date:

Item	Pc	Order no.	Description	LP IN INR
1	1	1 619 P11 358	Motor Housing .	831,00
3	1	1 619 P08 212	Armature 220-240V .	1.594,00
3/50	1	1 606 610 141	Fan .	30,00
4	1	1 607 200 179	On-Off Switch .	128,00
6	1	2 600 703 012	Grommet Ø6,5-Ø6,9x95	25,00
7	1	1 601 302 017	Fastening Clamp .	30,00
9	1	1 619 P09 527	Manufacturer's nameplate	
13	1	1 619 P08 829	groove ball bearing .	210,00
14	1	1 619 P00 455	Ball Bearing .	36,00
16	2	1 619 P01 811	Brush Holder .	30,00
17	2	1 604 652 013	Spiral Spring .	44,00
18	1	1 604 611 031	Compression Spring .	25,00
21	1	1 619 P10 235	Spindle Housing .	1.039,00
22	1	1 602 319 009	Adjusting Slide .	30,00
23	1	1 619 P02 762	Switch Button BLACK	30,00
24	1	1 600 502 023	Intermediate Ring .	68,00
25	1	1 619 P09 255	Housing Cover BLUE	347,00
26	1	1 619 P09 256	Intermediate Flange .	556,00
27	1	1 619 P09 261	Retaining snap ring .	33,00
28	1	1 619 P09 434	Sleeve Ring .	116,00
30	2	1 619 P09 263	Connector .	194,00
32	1	1 619 P09 262	Adjusting Ring .	36,00
39	1	1 619 P11 770	Cap Nut .	160,00
40	1	1 619 P09 863	Protective Sleeve .	406,00

Item	Pc	Order no.	Description	LP IN INR
42	1	2 609 110 052	Special Screw .	45,00
43	2	1 619 P00 220	Torx Oval-Head Screw	30,00
45	1	2 910 611 020	Tapping Screw DIN	44,00
46	4	1 619 P09 269	Torx Oval-Head Screw .	34,00
650/1	1	1 619 P09 252	Lock nut .	358,00
650/2	1	1 619 P10 661	Collet .	198,00
802	1	1 619 P09 888	Field 230V .	1.247,00
805	1	1 607 000 387	Power supply cord CN	271,00
808	1	1 619 P09 502	Nameplate .	
810	1	1 607 014 145	Carbon-Brush Set .	91,00
829	1	1 600 591 023	Air-Deflector Ring .	34,00
833	1	1 619 P09 253	Spindle Assembly .	1.386,00

Please observe: Repairing, modifying and testing of electro-tools are to be performed professionally.The safety regulations according to IEC, EN, VDE, AFNOR and other regulations of the individual countries are to be observed. Subject to change.
This price list supersedes all previous edition. Prices are subjected to change without any prior notice.

BOSCH Power Tools	Straight Grinders	Model GGS 30 LS 3 601 BB5 0F0 | BO

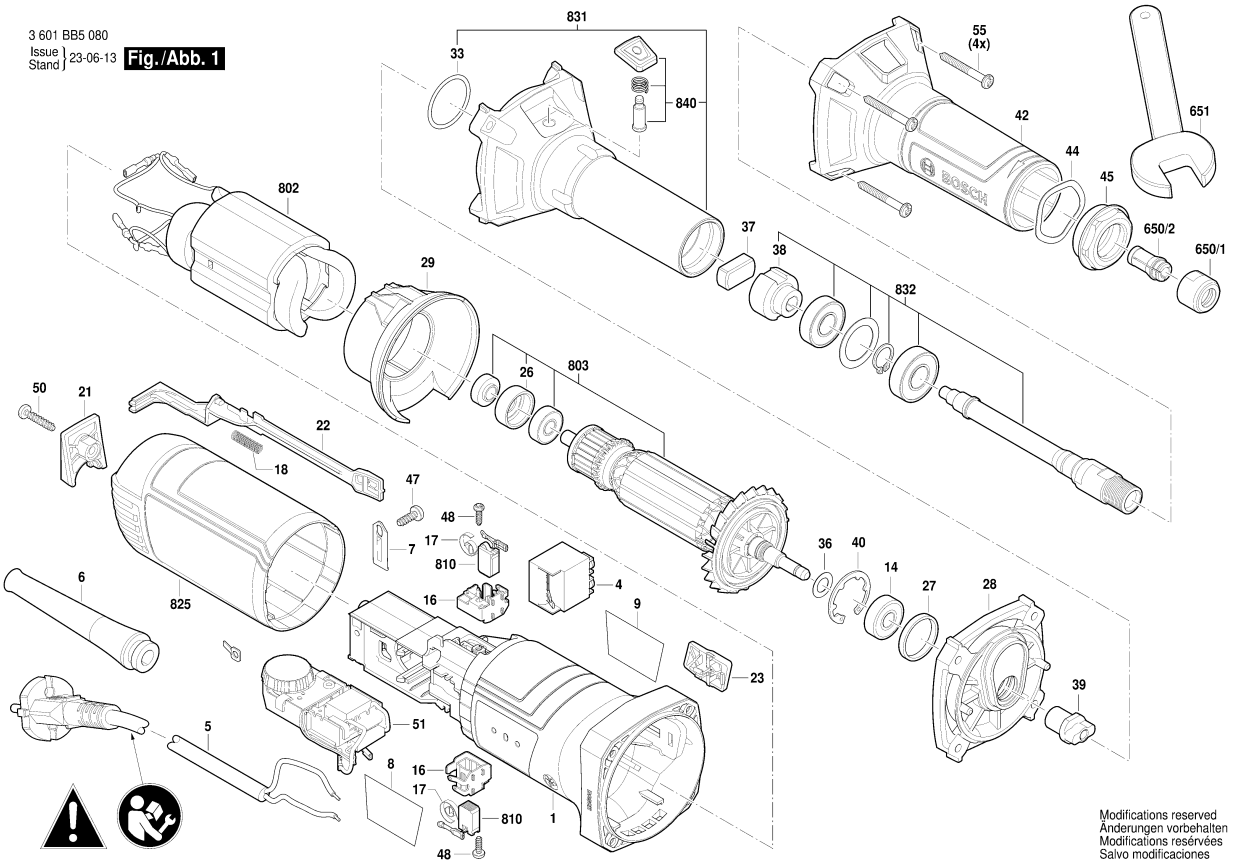

Model: 3 601 BB5 0F0 = 230 | Date:

Item	Pc	Order no.	Description	LP IN INR
1	1	1 619 P20 936	Motor Housing .	166,00
4	1	1 607 200 31S	Switch .	189,00
5	1	1 619 P15 857	Power supply cord IND .	
6	1	1 600 703 039	Grommet .	65,00
7	1	1 601 302 017	Fastening Clamp .	30,00
8	1	1 619 P21 260	Nameplate .	
9	1	1 619 P20 970	Manufacturer's nameplate .	
14	1	1 619 P13 103	groove ball bearing .	173,00
16	2	1 600 A00 RG1	Brush Holder .	43,00
17	2	1 604 652 013	Spiral Spring .	44,00
18	1	1 619 P11 487	Compression Spring .	52,00
21	1	1 619 P20 983	Cap .	26,00
22	1	1 619 P20 940	Adjusting Slide .	26,00
23	1	1 619 P21 162	Switch Button .	26,00
26	1	1 600 206 036	Rubber Ring .	46,00
27	1	1 600 206 025	Rubber Ring .	28,00
28	1	1 619 P20 958	Intermediate Flange .	309,00
29	1	1 619 P20 959	Air-Deflector Ring .	34,00
33	1	1 610 210 101	O-Ring 26,0x2,0 MM .	63,00
36	1	1 619 P00 987	Washer .	30,00
37	1	1 619 P20 962	Damper .	26,00
38	1	1 619 P20 960	Coupling Half .	95,00
39	1	1 619 P20 961	Coupling Half .	89,00
40	1	1 600 119 011	Retaining clip .	50,00

Item	Pc	Order no.	Description	LP IN INR
42	1	1 619 P20 966	Protection Sleeve .	143,00
44	1	1 619 P20 965	Washer .	34,00
45	1	1 619 P20 964	Cap Nut .	172,00
47	1	2 609 110 052	Special Screw .	45,00
48	2	1 619 P00 220	Torx Oval-Head Screw	30,00
50	1	1 619 P00 105	Torx Oval-Head Screw	30,00
51	1	1 607 233 5NZ	Speed governor .	1.236,00
55	4	1 619 P09 269	Torx Oval-Head Screw .	34,00
650/1	1	1 619 P09 252	Lock nut .	358,00
650/2	1	1 619 P10 661	Collet .	198,00
651	1	1 619 P21 169	Single-Head Eng. Wrench .	159,00
802	1	1 619 P21 344	Field .	1.275,00
803	1	1 619 P21 346	Armature .	1.873,00
810	1	1 619 P21 172	Carbon-Brush Set .	188,00
825	1	1 619 P21 173	Housing Cover .	141,00
831	1	1 619 P21 349	Spindle Housing .	1.039,00
832	1	1 619 P21 348	Spindle Assembly .	839,00
840	1	1 619 P21 354	Push Button .	112,00

Please observe: Repairing, modifying and testing of electro-tools are to be performed professionally.The safety regulations according to IEC, EN, VDE, AFNOR and other regulations of the individual countries are to be observed. Subject to change.
This price list supersedes all previous edition. Prices are subjected to change without any prior notice.

3 601 BB5 080
Issue / Stand 23-06-13 **Fig./Abb. 2**

Anzugsmomente
Torque values
Couple de serrage
Pares de apriete
Pos. 4 = 0,5 - 0,8 Nm
39 = 7,0 - 9,0 Nm
45 = 23 - 27 Nm
47 = 2,0 - 2,5 Nm
48 = 0,8 - 1,1 Nm
50 = 1,2 - 1,8 Nm
55 = 1,5 - 1,9 Nm

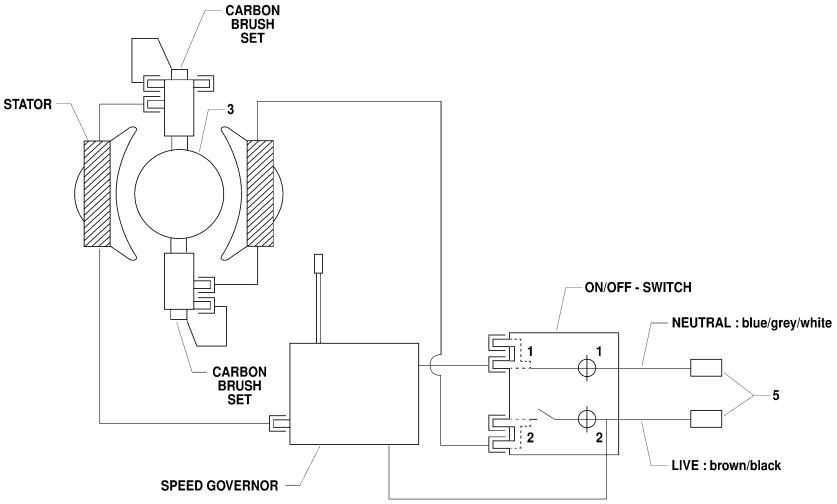

Modifications reserved
Änderungen vorbehalten
Modifications resérvées
Salvo modificaciones

Model: 3 601 BB5 0F0 = 230 | Date:

Item	Pc	Order no.	Description	LP IN INR	Item	Pc	Order no.	Description	LP IN INR

Please observe: Repairing, modifying and testing of electro-tools are to be performed professionally.The safety regulations according to IEC, EN, VDE, AFNOR and other regulations of the individual countries are to be observed. Subject to change.
This price list supersedes all previous edition. Prices are subjected to change without any prior notice.

BOSCH Power Tools	Impact Wrench	Model GDS 18 E 3 601 D44 000 | BO

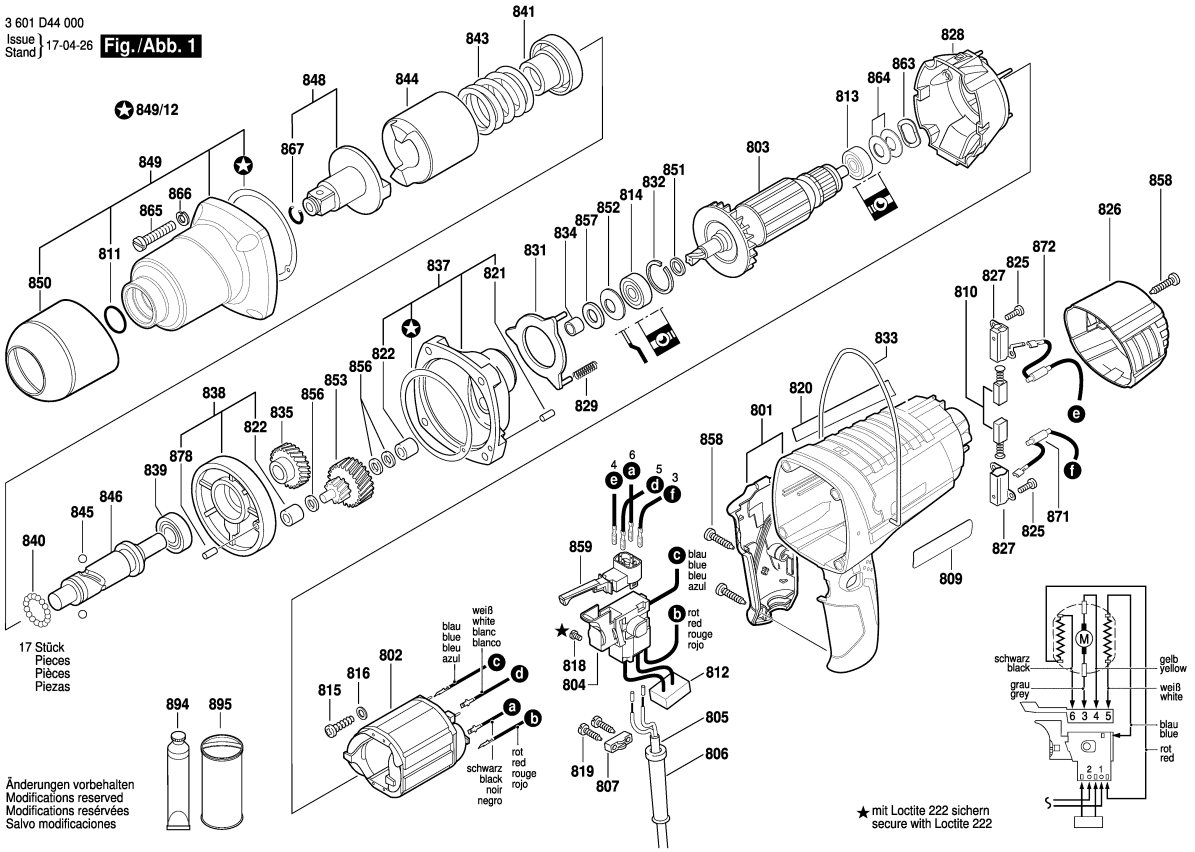

Model: 3 601 D44 000 = 230 | Date:

Item	Pc	Order no.	Description	LP IN INR
801	1	1 619 PA2 434	Motor Housing .	2.278,00
802	1	1 619 PA2 435	Field 220-230V .	2.420,00
803	1	1 619 PA2 436	Armature 220-230V .	4.130,00
804	1	1 607 200 252	On-Off Switch .	2.136,00
805	1	1 607 000 227	Power supply cord EU	2.705,00
806	1	1 619 PA2 888	Grommet .	67,00
807	1	1 619 PA2 889	Cable Clip .	63,00
809	1	1 619 PA2 437	Manufacturer's nameplate	
810	1	1 619 PA2 438	Carbon-Brush Set .	389,00
811	1	1 619 PA2 989	O-Ring .	86,00
812	1	1 619 PA2 439	Suppression Capacitor .	258,00
813	1	1 900 905 018	Ball Bearing 7x22x7 .	58,00
814	1	2 600 905 021	groove ball bearing 9x24x7	356,00
815	2	1 619 PA2 440	Screw .	71,00
816	2	1 619 PA2 441	Spring Washer .	71,00
818	2	1 619 PA2 442	Screw .	71,00
819	2	1 619 PA2 443	Screw .	71,00
820	1	1 619 PA2 444	Nameplate .	
821	1	2 917 500 095	Straight Pin 4 H 8x12 DIN 7	45,00
822	2	2 600 914 010	Needle-Roller Bearing Ø6	89,00
825	4	1 619 PA2 445	Screw .	71,00
826	1	1 619 PA2 446	Housing Cover .	570,00
827	2	1 619 PA2 890	Brush Holder .	222,00
828	1	1 619 PA2 447	Air-Deflector Ring .	352,00

Item	Pc	Order no.	Description	LP IN INR
829	3	1 619 PA2 990	Compression Spring .	71,00
831	1	1 619 PA2 448	Supporting Disc .	184,00
832	1	2 916 660 008	Spring retaining ring DIN	50,00
833	1	1 619 PA2 449	Suspension Loop .	354,00
834	1	1 619 PA2 991	Receptacle .	417,00
835	1	1 619 PA2 450	Cylindrical Gear .	1.710,00
837	1	1 619 PA2 451	Intermediate Bearing .	2.614,00
838	1	1 619 PA2 452	Intermediate Flange .	2.012,00
839	1	1 900 900 287	groove ball bearing	210,00
840	17	1 903 230 007	Ball DIN 5401-4 MM-III-ST .	71,00
841	1	1 619 PA2 992	Bushing .	1.581,00
843	1	1 619 PA2 993	Compression Spring .	854,00
844	1	1 619 PA2 994	Striker .	9.397,00
845	2	1 903 230 013	Ball DIN 5401-Ø7MM-III-ST	70,00
846	1	1 619 PA2 995	Drive Shaft .	5.695,00
848	1	1 619 PA2 453	Tool Holding Fixture .	7.832,00
849	1	1 619 PA2 454	Impact Mechanism	4.118,00
849/12	2	1 619 PA3 949	mat seal .	222,00
850	1	1 619 PA2 455	Protective Cover .	1.111,00
851	1	1 619 PA2 996	Spacer Ring .	71,00
852	1	1 619 PA2 997	Cupped Washer .	71,00
853	1	1 619 PA2 456	Toothed Shaft .	2.563,00
856	4	1 619 PA2 457	Shim .	71,00
857	1	1 619 PA2 998	Felt Washer .	71,00

Please observe: Repairing, modifying and testing of electro-tools are to be performed professionally.The safety regulations according to IEC, EN, VDE, AFNOR and other regulations of the individual countries are to be observed. Subject to change.
This price list supersedes all previous edition. Prices are subjected to change without any prior notice.

BOSCH Power Tools	Impact Wrench	Model GDS 18 E 3 601 D44 000 | BO

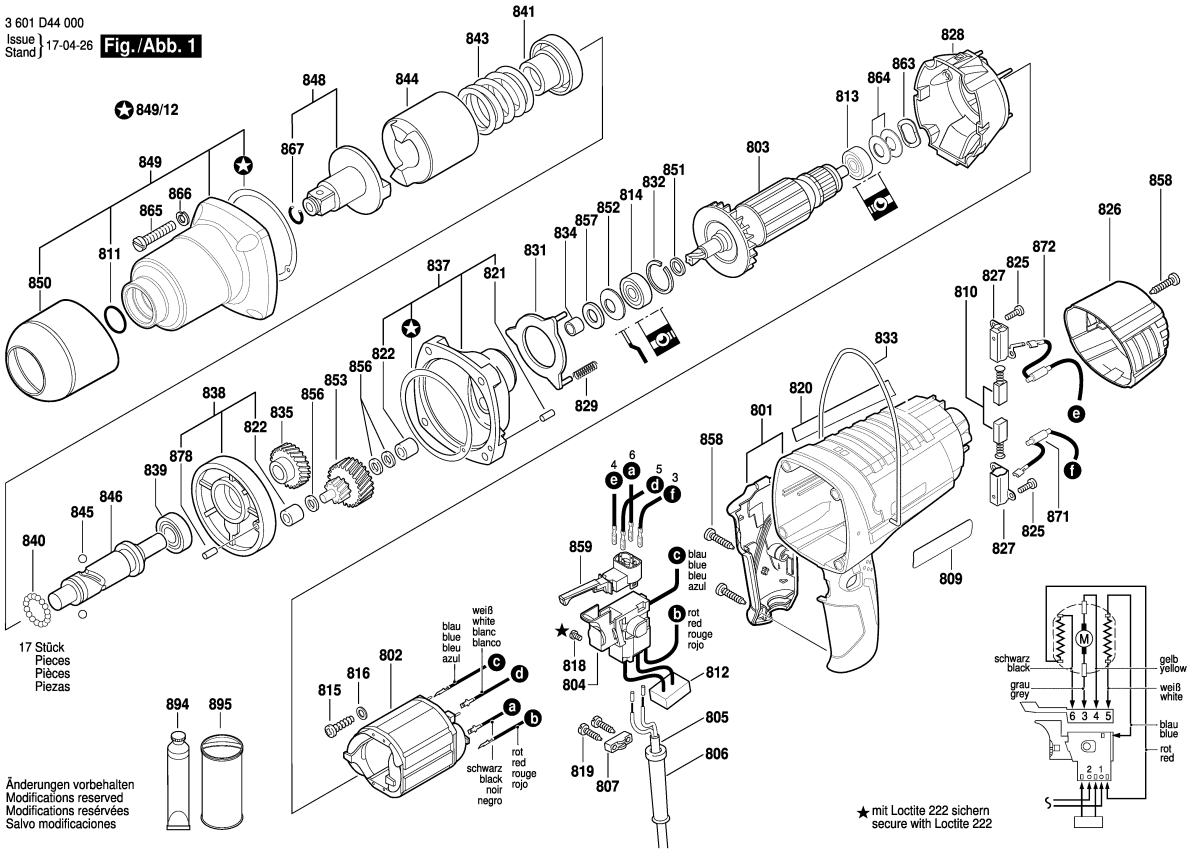

Model: 3 601 D44 000 = 230 | Date:

Item	Pc	Order no.	Description	LP IN INR
858	4	1 619 PA2 458	Screw .	71,00
859	1	2 607 200 176	Change-Over Switch .	887,00
863	1	2 600 150 004	Shim .	42,00
864	2	1 619 PA2 999	Shim .	45,00
865	4	1 619 PA2 459	Screw .	61,00
866	4	2 916 690 004	Spring Lock Washer DIN	45,00
867	1	1 619 PA3 000	Retaining ring .	71,00
871	1	1 619 PA2 460	Suppressor Box .	238,00
872	1	1 619 PA2 891	Suppressor Box .	238,00
878	1	2 917 500 101	Straight Pin 4 H 8x24 DIN 7	59,00
894	1	1 615 430 020	Grease Tube 225 ML .	1.467,00
895	1	3 605 430 003	Grease Tube Albida .	1.473,00

Item	Pc	Order no.	Description	LP IN INR

Please observe: Repairing, modifying and testing of electro-tools are to be performed professionally.The safety regulations according to IEC, EN, VDE, AFNOR and other regulations of the individual countries are to be observed. Subject to change.
This price list supersedes all previous edition. Prices are subjected to change without any prior notice.

BOSCH Power Tools	Impact Wrench	Model GDS 30 0 601 435 103 | BO

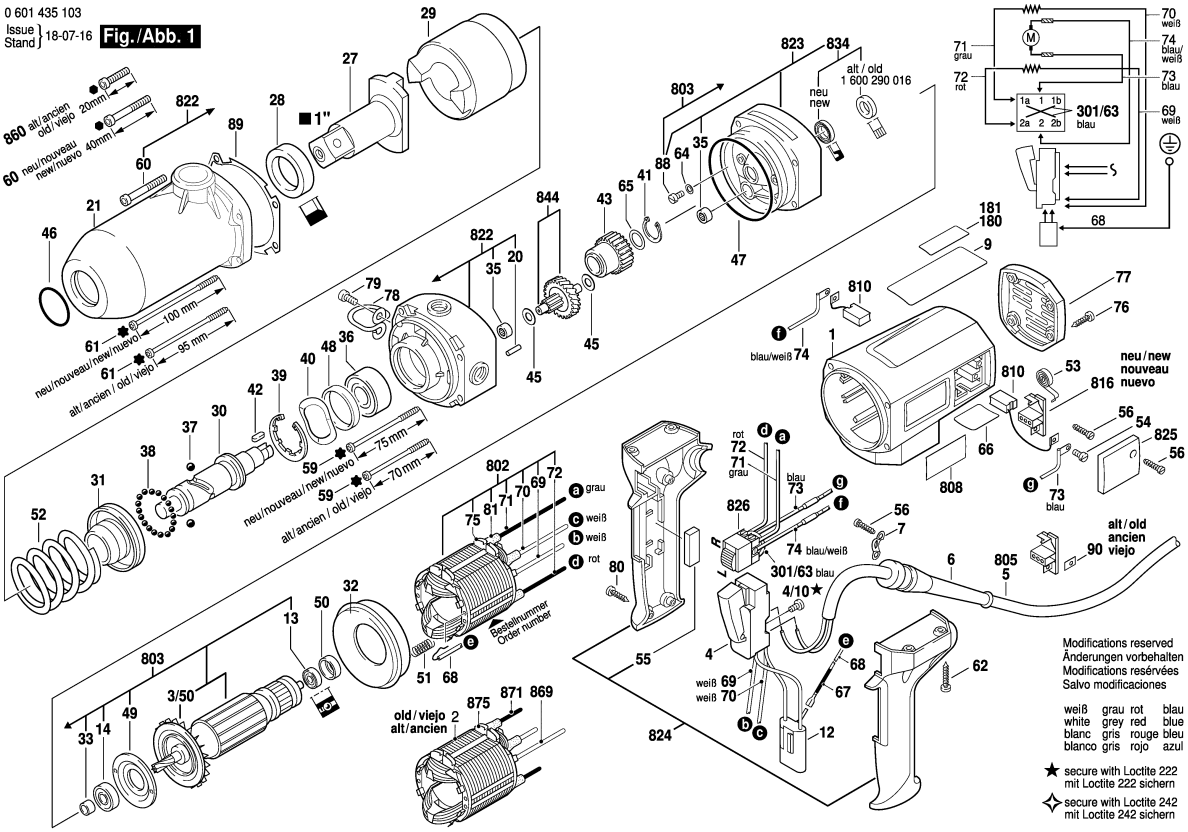

Model: 0 601 435 103 = 230 | Date:

Item	Pc	Order no.	Description	LP IN INR
1	1	3 605 108 091	Motor Housing BLUE	1.285,00
3/50	1	1 606 610 122	Fan .	129,00
4	1	1 607 200 079	Switch .	1.474,00
4/10	4	2 910 011 082	Socket head cap screw	72,00
6	1	3 600 703 011	Grommet Ø9,2-Ø12x120	193,00
7	1	1 601 302 014	Fastening Clamp .	125,00
9	1	3 601 110 614	Sticker .	
12	1	2 607 329 096	Suppression Filter .	327,00
13	1	2 600 905 032	Ball Bearing 7x19x6 .	164,00
14	1	3 600 905 131	groove ball bearing 9x26x8	323,00
20	1	2 917 500 119	Straight Pin DIN 7-5H8x14 .	61,00
21	1	3 605 806 222	Spindle Bearing .	8.047,00
27	1	1 606 455 054	Coupling Half .	10.161,00
28	1	3 600 202 019	Spacer Ring .	2.149,00
29	1	1 608 710 028	Striker .	19.781,00
30	1	1 603 124 106	Drive Shaft .	10.066,00
31	1	3 600 220 019	Backup ring .	4.961,00
32	1	1 600 502 019	Air-Deflector Ring .	102,00
33	1	3 600 300 042	Intermediate Ring .	555,00
35	2	1 600 910 018	Needle bearing Ø8xØ12x8	57,00
36	1	1 900 905 281	groove ball bearing	1.424,00
37	2	1 903 230 015	Ball DIN 5401-9 MM III-ST .	73,00
38	18	1 903 230 009	Ball DIN 5401-5 G28 .	64,00
39	1	1 600 119 004	Spring retaining ring .	117,00

Item	Pc	Order no.	Description	LP IN INR
40	1	1 600 150 009	Spring Washer	506,00
41	1	2 916 650 006	Retaining clip DIN	50,00
42	1	1 902 300 083	Parallel Key DIN	50,00
43	1	3 606 301 006	Cylindrical Gear Z=25 .	3.559,00
45	2	1 600 100 617	Shim 0,5 MM THICK	50,00
46	1	3 600 210 131	O-Ring 35,0x3,0 MM .	101,00
47	1	1 600 210 005	O-Ring 66,0x3,0 MM .	64,00
48	1	1 600 206 022	Rubber Ring .	61,00
49	1	3 605 500 043	Bearing cover .	521,00
50	1	1 600 502 011	Intermediate Ring .	47,00
51	2	1 604 613 006	Compression Spring .	44,00
52	1	3 604 610 059	Compression Spring .	1.138,00
53	2	1 604 652 02K	Spiral Spring .	69,00
54	2	3 603 435 045	Socket head cap screw .	45,00
55	2	3 602 317 025	Insulating Strip .	71,00
56	6	2 910 211 019	Tapping Screw DIN	31,00
59	2	3 603 435 040	Lens Head Screw .	50,00
60	2	2 910 151 170	Hex Socket Head Cap	44,00
61	2	3 603 435 041	Lens Head Screw .	50,00
62	4	3 603 435 027	Tapping Screw 5x30 .	64,00
64	2	3 600 120 013	Plain Washer DIN	71,00
65	1	1 600 101 600	Shim washer 0,4 MM	86,00
66	1	3 601 110 370	Sticker .	
67	1	1 600 712 027	Shrinkable Tube .	69,00

Please observe: Repairing, modifying and testing of electro-tools are to be performed professionally.The safety regulations according to IEC, EN, VDE, AFNOR and other regulations of the individual countries are to be observed. Subject to change.
This price list supersedes all previous edition. Prices are subjected to change without any prior notice.

0 601 435 103
Issue / Stand 10-09-29 **Fig./Abb. 2**

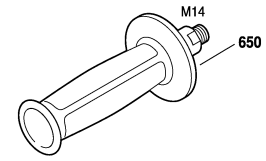

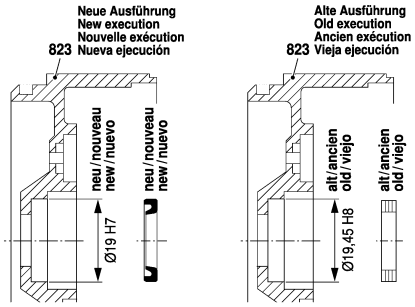

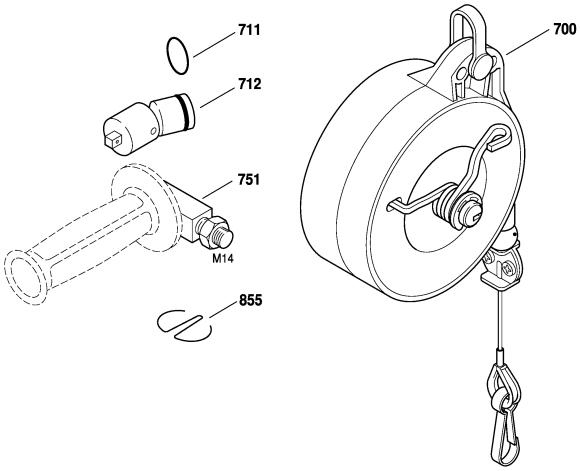

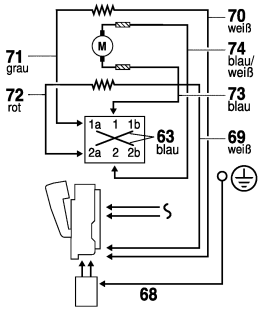

weiß grau rot blau
white grey red blue
blanc gris rouge bleu
blanco gris rojo azul

Modifications reserved
Änderungen vorbehalten
Modifications reservées
Salvo modificaciones

Model: 0 601 435 103 = 230 | Date:

Item	Pc	Order no.	Description	LP IN INR
68	1	3 604 448 044	Elec. Cable W/Connection	86,00
69	1	3 604 438 025	Connecting Cable L=470	96,00
70	1	1 604 438 012	Connecting Cable L=330	73,00
71	1	3 604 460 135	Connecting Cable L=330	1.735,00
72	1	3 604 438 008	Connecting Cable L=160	1.895,00
73	1	3 604 503 036	Suppression Filter L=300	285,00
74	1	3 604 503 037	Suppression Filter L=150	285,00
75	4	3 601 025 003	Wire Guide .	41,00
76	4	2 914 201 527	Torx Oval-Head Screw .	69,00
77	1	3 605 500 062	Sealing cap BLACK	233,00
78	1	3 601 310 013	Suspension Loop .	598,00
79	2	2 910 131 193	Hex Socket Head Cap	69,00
80	3	2 914 201 508	Torx Oval-Head Screw .	129,00
81	4	3 600 707 022	Shrinkable Tube .	71,00
88	2	3 603 435 045	Socket head cap screw .	45,00
89	1	3 601 023 010	Seal .	285,00
90	2	1 601 030 022	Tab Washer .	45,00
301/63	2	3 604 412 002	Connecting Cable L=60	134,00
650	1	1 602 025 0A1	Auxiliary Handle .	623,00
650	1	1 602 025 09Z	Auxiliary Handle .	639,00
700	1	0 607 950 926	Spring Pull 8-10 KG	
712	1	1 608 500 009	Ball Joint 1", 100 MM .	
751	1	1 603 527 017	Threaded Fitting M14, L=70	
802	1	3 604 220 138	Field 220-230V .	3.845,00

Item	Pc	Order no.	Description	LP IN INR
803	1	3 604 010 071	Armature 220-230V .	6.408,00
805	1	1 607 000 227	Power supply cord EU	2.705,00
808	1	1 601 11A 3H3	Nameplate .	
810	1	3 607 014 012	Carbon-Brush Set .	744,00
816	2	3 604 336 012	Brush Holder .	257,00
822	1	3 607 031 648	Gear Housing .	6.457,00
823	1	3 605 806 168	Intermediate Flange .	4.191,00
824	1	3 605 132 064	Handle BLUE	3.559,00
825	2	3 605 500 060	Sealing cap BLUE	
826	1	3 607 200 000	Switch .	1.138,00
834	1	3 600 290 070	Rotary shaft lip seal .	615,00
844	1	1 607 000 C6N	Gear Shaft .	6.671,00
860	2	3 603 414 028	Hex Socket Head Cap	71,00
869	1	3 604 460 009	Connecting Cable L=450	131,00
871	1	1 604 438 013	Connecting Cable L=345	115,00
875	4	3 601 025 003	Wire Guide .	41,00

Please observe: Repairing, modifying and testing of electro-tools are to be performed professionally.The safety regulations according to IEC, EN, VDE, AFNOR and other regulations of the individual countries are to be observed. Subject to change.
This price list supersedes all previous edition. Prices are subjected to change without any prior notice.

BOSCH Power Tools	Slide Mitre Saw	Model GCM 10 MX 3 601 M29 0K0 | BO

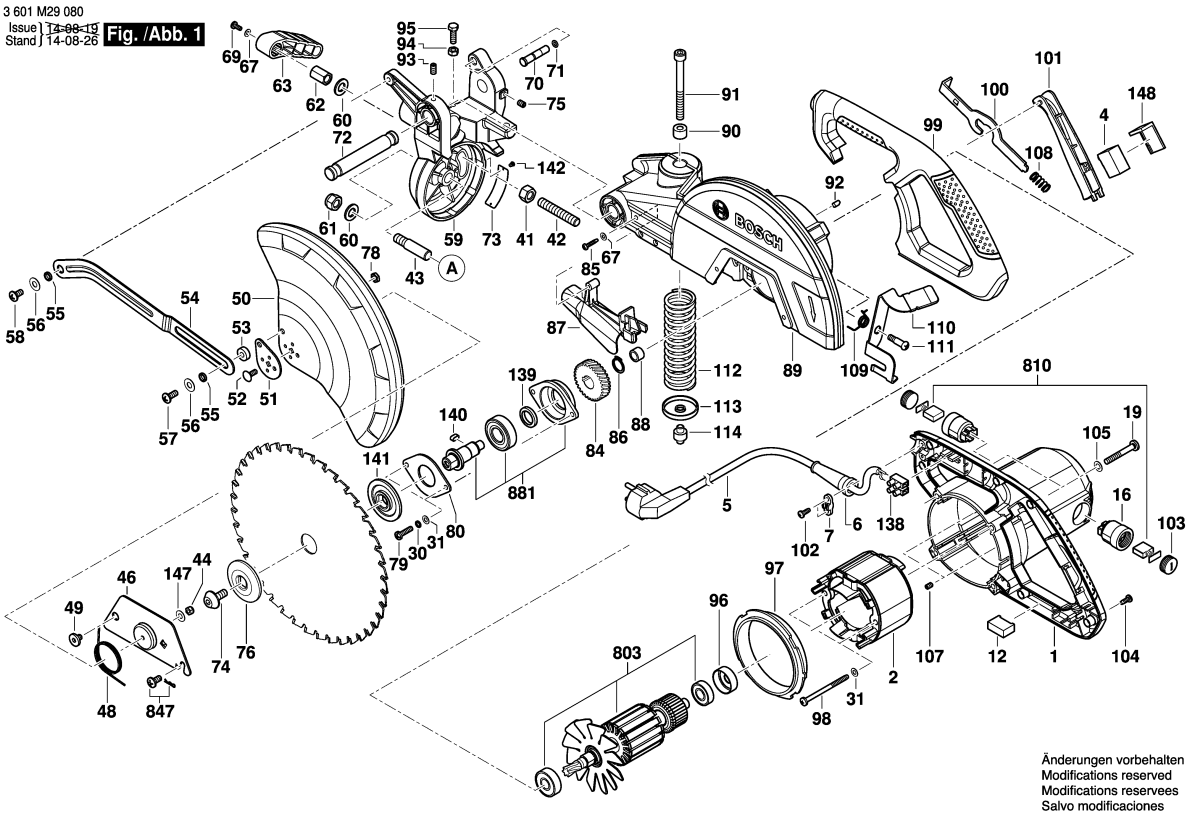

Model: 3 601 M29 0K0 = 230 | Date:

Item	Pc	Order no.	Description	LP IN INR
1	1	1 619 PA7 071	Motor Housing .	1.205,00
2	1	1 619 PA6 835	Field 220-240V .	2.726,00
4	1	1 619 PA6 703	Switch .	530,00
5	1	1 619 PA7 075	Power supply cord .	515,00
6	1	1 619 PA7 081	Grommet .	62,00
7	1	1 609 203 J01	Fastening Clamp .	41,00
12	1	1 619 PA7 095	Suppression Capacitor .	87,00
16	2	1 619 PA6 920	Brush Holder .	258,00
19	4	1 619 PA7 002	Pan head screw .	148,00
22	1	1 619 PA6 924	Mitre Fence .	540,00
23	1	1 619 PA6 925	Mitre Fence .	1.186,00
24	1	1 619 PA6 926	Wing Screw .	41,00
25	2	1 619 PA6 927	Set screw .	41,00
26	4	1 619 PA6 928	Plain Washer .	37,00
27	4	1 619 PA6 929	Hex Socket Head Cap	86,00
28	1	1 619 PA6 930	Table .	2.794,00
29	2	1 619 PA6 931	Pan head screw .	41,00
30	4	1 619 PA6 932	Spring Washer .	41,00
31	6	1 619 PA6 933	Plain Washer .	62,00
32	1	1 619 PA6 934	Cover .	41,00
33	1	1 619 PA6 935	Knob .	227,00
34	4	1 619 PA6 921	Spring Washer .	62,00
35	1	1 619 PA6 936	Plain Washer .	41,00
36	1	1 619 PA6 937	Self-locking nut .	41,00

Item	Pc	Order no.	Description	LP IN INR
37	1	1 619 PA6 938	Insert .	148,00
38	4	1 619 PA6 939	Countersunk-Head Screw .	62,00
39	1	1 619 PA6 940	Nut .	62,00
40	1	1 619 PA6 941	Pointer .	41,00
41	1	1 619 PA6 942	Nut .	41,00
42	1	1 619 PA6 943	Set screw .	62,00
43	1	1 619 PA6 944	Pivot Shaft .	87,00
44	1	1 619 PA6 945	Self-locking nut .	41,00
45	1	1 619 PA6 922	Scale .	41,00
46	1	1 619 PA6 946	Guard Plate .	167,00
48	1	1 619 PA6 948	Torsion Spring .	41,00
49	1	1 619 PA6 949	Special Screw .	41,00
50	1	1 619 PA6 950	Protective Cover .	540,00
51	1	1 619 PA6 951	Guard Plate .	62,00
52	1	1 619 PA6 952	Special Screw .	62,00
53	1	1 619 PA6 953	Bushing .	41,00
54	1	1 619 PA6 954	Linkage .	215,00
55	2	1 619 PA6 955	Bushing .	62,00
56	2	1 619 PA6 956	Plain Washer .	41,00
57	1	1 619 PA6 957	Pan head screw .	41,00
58	1	1 619 PA6 958	Special Screw .	41,00
59	1	1 619 PA6 959	Bearing Block .	1.101,00
60	2	1 619 PA6 960	Plain Washer .	41,00
61	1	1 619 PA6 961	Self-locking nut .	41,00

Please observe: Repairing, modifying and testing of electro-tools are to be performed professionally.The safety regulations according to IEC, EN, VDE, AFNOR and other regulations of the individual countries are to be observed. Subject to change.
This price list supersedes all previous edition. Prices are subjected to change without any prior notice.

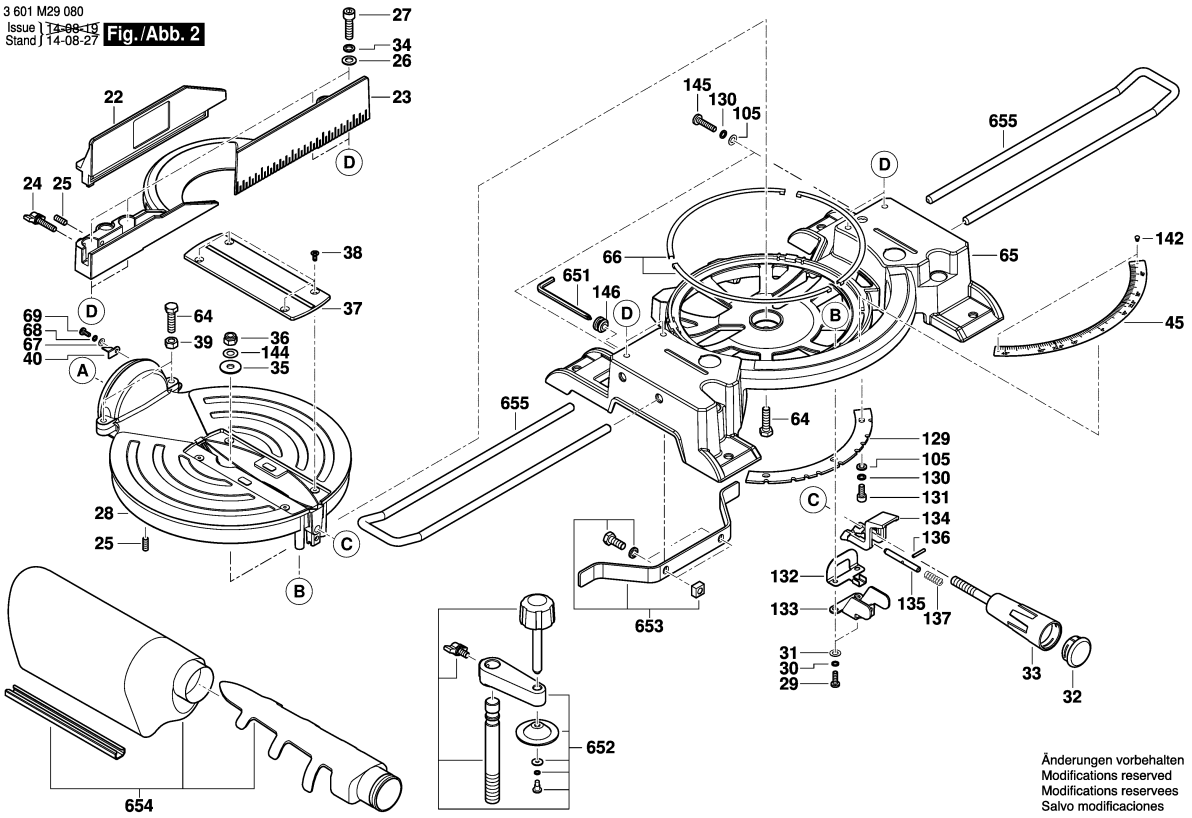

Model: 3 601 M29 0K0 = 230 | Date:

Item	Pc	Order no.	Description	LP IN INR
62	1	1 619 PA6 962	Locking nut .	87,00
63	1	1 619 PA6 963	Lever .	87,00
64	3	1 619 PA6 964	Hex Screw .	87,00
65	1	1 619 PA6 965	Base .	3.507,00
66	3	1 619 PA6 923	Sliding Plate .	167,00
67	3	1 619 PA6 966	Plain Washer .	41,00
68	1	1 619 PA6 967	Spring Washer .	41,00
69	2	1 619 PA6 968	Pan head screw .	41,00
70	1	1 619 PA6 969	Detent Pin .	62,00
71	1	1 619 PA6 970	O-Ring .	41,00
72	1	1 619 PA6 971	Pivot Shaft .	148,00
73	1	1 619 PA6 972	Scale .	86,00
74	1	1 619 P03 482	Bolt .	29,00
75	1	1 619 PA7 349	Set screw .	41,00
76	1	1 619 PA6 973	Clamping Flange .	154,00
78	1	1 619 PA7 034	Nut .	41,00
79	2	1 619 PA6 975	Pan head screw .	41,00
80	1	1 619 PA6 976	Bearing cover .	62,00
84	1	1 619 PA6 980	Helical Gear .	530,00
85	1	1 619 PA6 981	Pan head screw .	41,00
86	1	1 619 PA6 982	Spring retaining ring .	41,00
87	1	1 619 PA6 983	Dust Separator .	41,00
88	1	1 619 PA6 984	Needle bearing .	89,00
89	1	1 619 PA6 985	Safety Guard .	2.281,00

Item	Pc	Order no.	Description	LP IN INR
90	1	1 619 PA6 986	Bushing .	41,00
91	1	1 619 PA6 987	Hex Screw .	41,00
92	1	1 619 PA6 988	Spacer Pin .	41,00
93	1	1 619 PA6 989	Set screw .	41,00
94	1	1 619 PA6 990	Nut .	41,00
95	1	1 619 PA6 991	Hex Screw .	41,00
96	1	1 619 PA6 992	Rubber Ring .	64,00
97	1	1 619 PA6 993	Air-Deflector Ring .	87,00
98	2	1 619 PA6 994	Pan head screw .	148,00
99	1	1 619 PA6 995	Handle .	447,00
100	1	1 619 PA6 996	shaft lock .	87,00
101	1	1 619 PA6 997	Trigger .	89,00
102	2	1 619 PA6 998	Pan head screw .	41,00
103	2	1 619 PA6 999	Brush-Cover .	41,00
104	7	1 619 PA7 000	Pan head screw .	41,00
105	9	1 619 PA7 001	Plain Washer .	41,00
107	2	1 619 PA7 003	Set screw .	41,00
108	1	1 619 PA7 004	Compression Spring .	41,00
109	1	1 619 PA7 005	Torsion Spring .	41,00
110	1	1 619 PA7 006	Locking Lever .	148,00
111	1	1 619 PA7 007	Special Screw .	41,00
112	1	1 619 PA7 008	Compression Spring .	447,00
113	1	1 619 PA7 009	Spring Holder .	62,00
114	1	1 619 PA7 010	Positioning Pin .	41,00

Please observe: Repairing, modifying and testing of electro-tools are to be performed professionally.The safety regulations according to IEC, EN, VDE, AFNOR and other regulations of the individual countries are to be observed. Subject to change.
This price list supersedes all previous edition. Prices are subjected to change without any prior notice.

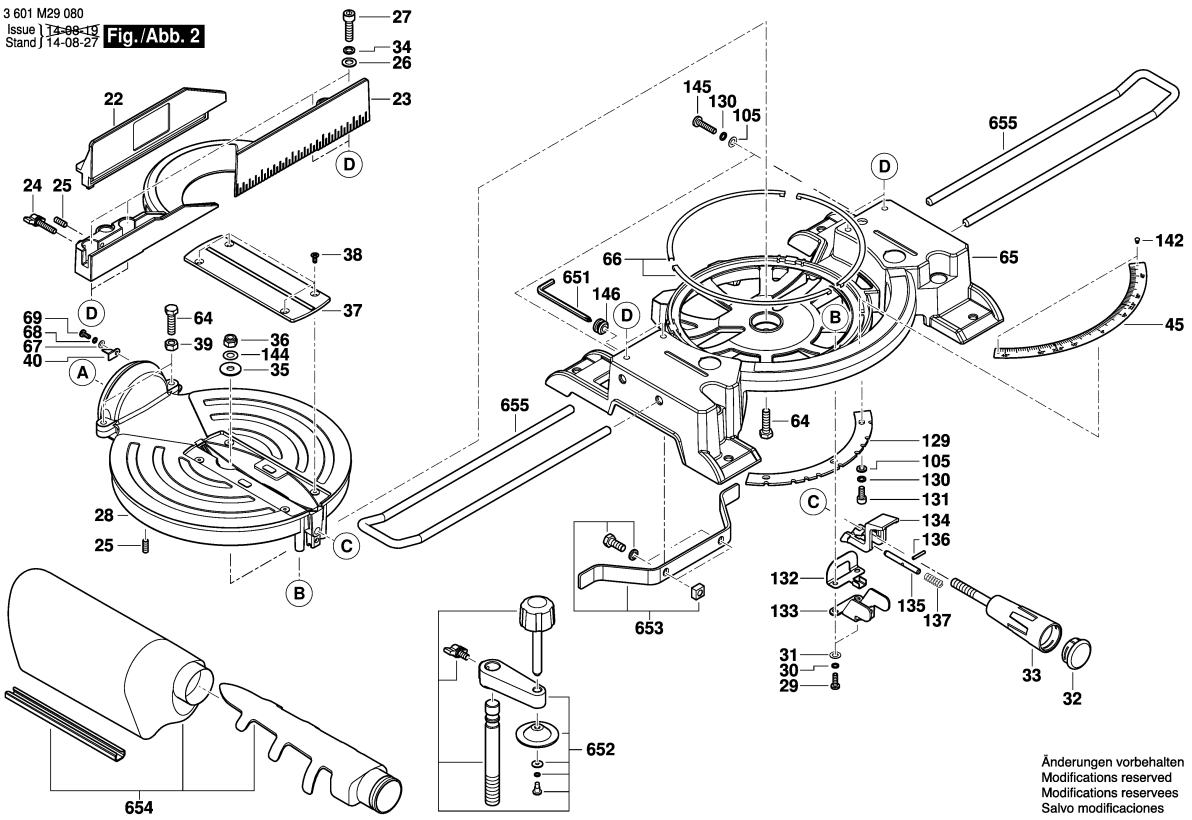

Model: 3 601 M29 0K0 = 230 | Date:

Item	Pc	Order no.	Description	LP IN INR
129	1	1 619 PA7 011	Angle Plate .	148,00
130	5	1 619 PA7 012	Spring Washer .	41,00
131	3	1 619 PA7 013	Hex Socket Head Cap	41,00
132	1	1 619 PA7 014	Locking Plate .	41,00
133	1	1 619 PA7 015	Bracket .	86,00
134	1	1 619 PA7 016	Push rod .	62,00
135	1	1 619 PA7 017	Locking Bar .	62,00
136	1	1 619 PA7 018	Locking pin .	87,00
137	1	1 619 PA7 019	Compression Spring .	41,00
138	1	1 619 PA7 020	Plug Connector .	62,00
139	1	1 619 PA7 021	Bushing .	41,00
140	1	1 619 PA7 022	Parallel Key .	41,00
141	1	1 619 PA7 023	Clamping Flange .	221,00
142	4	1 619 PA7 024	Rivet .	41,00
144	1	1 619 PA7 026	Spring Washer .	41,00
145	2	1 619 PA7 027	Pan head screw .	41,00
146	1	1 619 PA7 028	Holder .	41,00
147	1	1 619 PA7 029	Plain Washer .	41,00
148	1	1 619 PA7 030	Spacer .	42,00
149	1	1 619 PA7 031	Cable Set .	148,00
651	1	1 619 PA7 036	Hexagon Socket Wrench .	87,00
652	1	1 619 PA7 037	Clamp .	447,00
653	1	1 619 PA7 046	Support Plate .	148,00
654	1	1 619 PA7 051	Dust Bag .	265,00

Item	Pc	Order no.	Description	LP IN INR
655	2	1 619 PA6 916	Extension Stand .	556,00
803	1	1 619 PA7 056	Armature 220-240V .	4.520,00
810	1	1 619 PA7 057	Carbon-Brush Set .	762,00
847	1	1 619 PA7 058	Special Screw .	41,00
881	1	1 619 PA7 032	Spindle .	556,00

Please observe: Repairing, modifying and testing of electro-tools are to be performed professionally.The safety regulations according to IEC, EN, VDE, AFNOR and other regulations of the individual countries are to be observed. Subject to change.
This price list supersedes all previous edition. Prices are subjected to change without any prior notice.

3 601 M45 000
Issue / Stand 21-01-07 **Fig./Abb. 1**

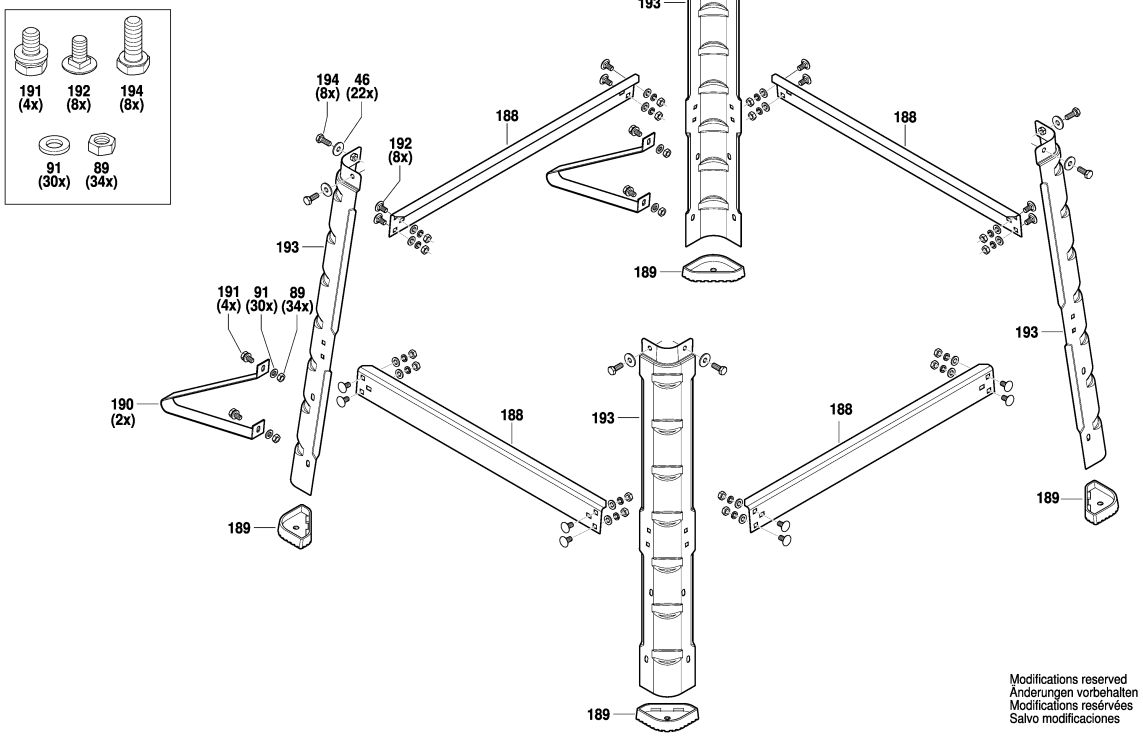

Model: 3 601 M45 0F0 = 230 | Date:

Item	Pc	Order no.	Description	LP IN INR
2	1	1 604 220 58V	Field .	1.986,00
4	1	1 607 200 37L	Switch .	860,00
5	1	1 619 PB6 262	Power Cable IND .	
6	1	1 600 703 05B	Grommet .	29,00
7	2	1 600 A02 2BY	Clamp .	29,00
8	1	1 601 11A 8G8	Nameplate .	
9	1	1 601 11C 3WM	Sticker .	
12	1	1 619 PB6 256	Suppression Capacitor .	177,00
13	1	1 600 900 09G	groove ball bearing .	223,00
19	10	1 603 430 08V	Screw .	29,00
23	3	1 600 A02 2CF	Nut .	29,00
27	1	1 600 A02 2DZ	Plug .	29,00
28	1	1 600 A02 2EG	End stop .	419,00
32	2	1 600 A02 2CM	Bolt .	29,00
33	1	1 600 A02 2E0	Plug .	29,00
34	4	1 600 A02 2C0	Knob .	29,00
35	6	1 603 430 08W	Screw .	29,00
43	1	1 600 A02 2BT	Locking Pin .	41,00
44	1	1 600 A02 2FM	Clamping Lever .	81,00
45	1	1 600 A02 2FN	Wheel .	29,00
46	22	1 600 A02 2CC	Gasket .	29,00
47	5	1 603 430 09P	Screw .	36,00
48	1	1 600 A02 2ES	Bracket .	70,00
49	2	1 603 430 08Y	Screw .	29,00

Item	Pc	Order no.	Description	LP IN INR
50	1	1 600 A02 2DV	Plate .	29,00
51	1	1 600 A02 2C9	Screw .	29,00
54	1	1 600 A02 2CX	Locking Lever .	134,00
55	1	1 600 A02 2CY	Guard .	267,00
57	1	1 600 A02 2F1	Riving Knife .	346,00
58	1	1 600 A02 2CN	Bolt .	40,00
67	1	1 600 A02 2DM	Stop Plate .	37,00
68	1	1 600 A02 2DN	Stop Plate .	41,00
69	1	1 619 PB7 208	Insert .	506,00
70	1	1 600 A02 2F2	Clip .	128,00
71	1	1 603 430 08Z	Screw .	29,00
72	1	1 605 500 2HL	Cover .	29,00
73	1	1 600 A02 2F5	Table top .	825,00
74	1	1 600 A02 2ET	Base .	307,00
75	4	1 603 430 090	Screw .	29,00
76	1	1 600 A02 2E1	Plug .	29,00
77	13	1 603 430 091	Screw .	29,00
78	1	1 600 A02 2F6	Table top .	4.259,00
79	2	1 600 A02 2ED	Handle .	40,00
80	1	1 600 A02 2DD	Seat .	213,00
81	4	1 603 430 092	Screw .	29,00
82	2	1 600 A02 2DE	Seat .	44,00
83	6	1 603 430 093	Screw .	29,00
84	1	1 600 A02 2C3	Torsion Spring .	29,00

Please observe: Repairing, modifying and testing of electro-tools are to be performed professionally.The safety regulations according to IEC, EN, VDE, AFNOR and other regulations of the individual countries are to be observed. Subject to change.
This price list supersedes all previous edition. Prices are subjected to change without any prior notice.

3 601 M45 000
Issue / Stand 21-01-07 **Fig./Abb. 2**

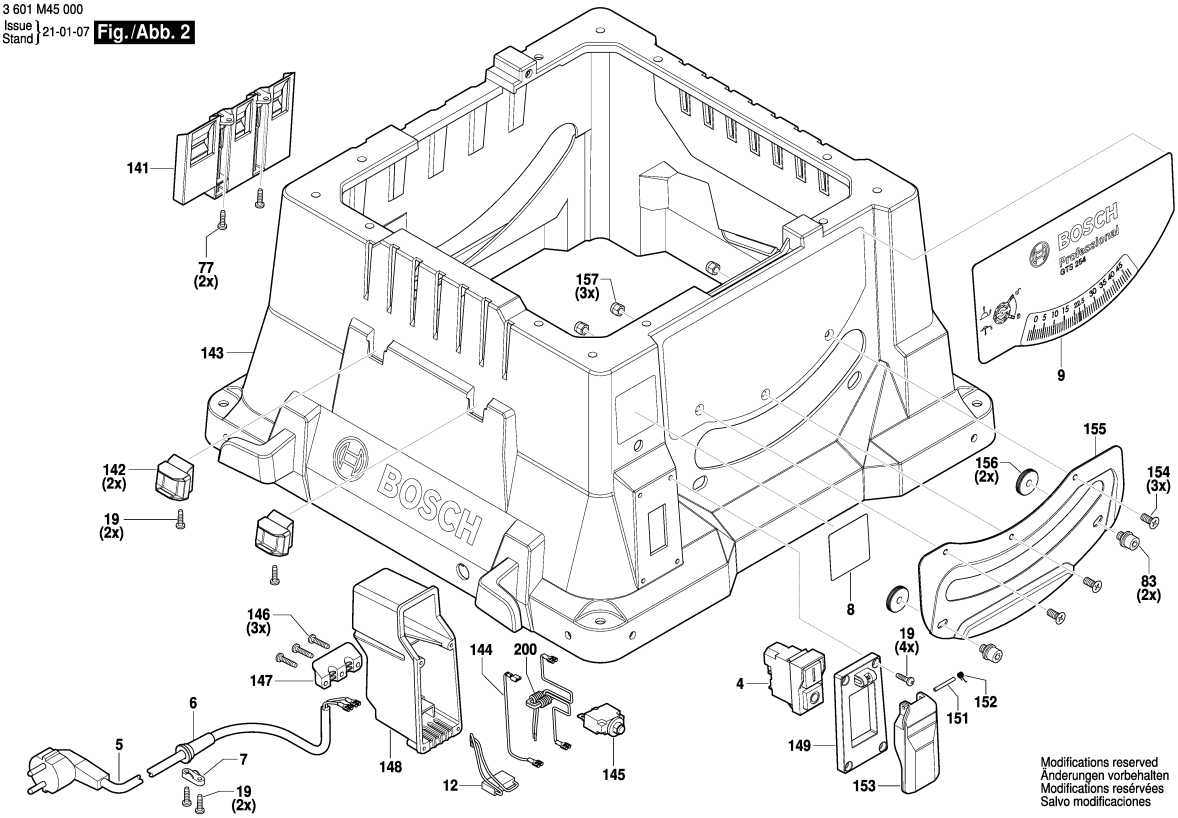

Model: 3 601 M45 0F0 = 230 | Date:

Item	Pc	Order no.	Description	LP IN INR
85	1	1 600 A02 2CZ	Guard .	198,00
86	1	1 600 A02 2D0	Guard .	29,00
87	2	1 600 A02 2F7	Shim .	29,00
88	1	1 600 A02 2DF	Seat .	270,00
89	34	1 600 A02 2CG	Nut .	29,00
90	24	1 600 150 03M	Spring Washer .	29,00
91	30	1 600 A02 2BM	Washer .	29,00
92	4	1 600 A02 2F8	Scale Wheel .	29,00
93	1	1 600 A02 2F9	Indicator .	29,00
94	4	1 600 A02 2DP	mounting plate .	29,00
95	4	1 600 A02 2CP	Bolt .	29,00
96	1	1 600 A02 2E2	Plug .	29,00
97	1	1 600 A02 2EP	Scale .	68,00
98	1	1 600 A02 2EU	Base .	851,00
99	1	1 600 A02 2ER	Scale .	41,00
100	1	1 600 A02 2E3	Plug .	29,00
101	4	1 600 A02 2CD	Gasket .	29,00
102	1	1 605 500 2HM	Cover .	506,00
103	1	1 603 430 094	Screw .	67,00
105	1	1 600 A02 2FA	Flange .	68,00
107	1	1 619 PB6 279	Flange .	176,00
108	1	1 600 A02 2DY	Plate .	71,00
109	4	1 603 430 095	Screw .	29,00
112	1	1 600 A02 2FP	Woodruff Key .	29,00

Item	Pc	Order no.	Description	LP IN INR
113	1	1 600 A02 2FR	Output Shaft .	187,00
114	1	1 603 430 09R	Screw .	29,00
115	1	1 600 A02 2BL	Crown Gear .	759,00
116	1	1 600 A02 2BK	Riving Knife .	59,00
117	1	1 600 A02 2F4	Circlip .	29,00
119	2	1 603 430 096	Screw .	29,00
120	1	1 600 A02 2DG	Seat .	299,00
121	1	1 600 A02 2FS	Pad .	29,00
122	1	1 600 A02 2DH	Seat .	138,00
123	1	1 600 A02 2DU	Plate .	1.233,00
124	1	1 600 A02 2CL	Nut .	70,00
126	4	1 603 430 097	Screw .	29,00
127	1	1 600 A02 2FT	Shroud .	
128	2	1 603 430 098	Screw .	29,00
129	1	1 600 A02 2FU	Washer .	29,00
130	2	1 600 A02 2E8	Cap .	29,00
131	1	1 605 500 2HN	Cover .	66,00
132	1	1 600 A02 2EL	Connecting Wire .	87,00
133	2	1 600 A02 2BN	Washer .	29,00
134	2	1 603 430 099	Screw .	29,00
135	1	1 600 A02 2EA	Sleeve .	29,00
136	1	1 600 A02 2D8	Rod .	238,00
137	2	1 606 333 2FF	Bevel Gear .	168,00
138	2	1 603 430 09A	Screw .	29,00

Please observe: Repairing, modifying and testing of electro-tools are to be performed professionally.The safety regulations according to IEC, EN, VDE, AFNOR and other regulations of the individual countries are to be observed. Subject to change.
This price list supersedes all previous edition. Prices are subjected to change without any prior notice.

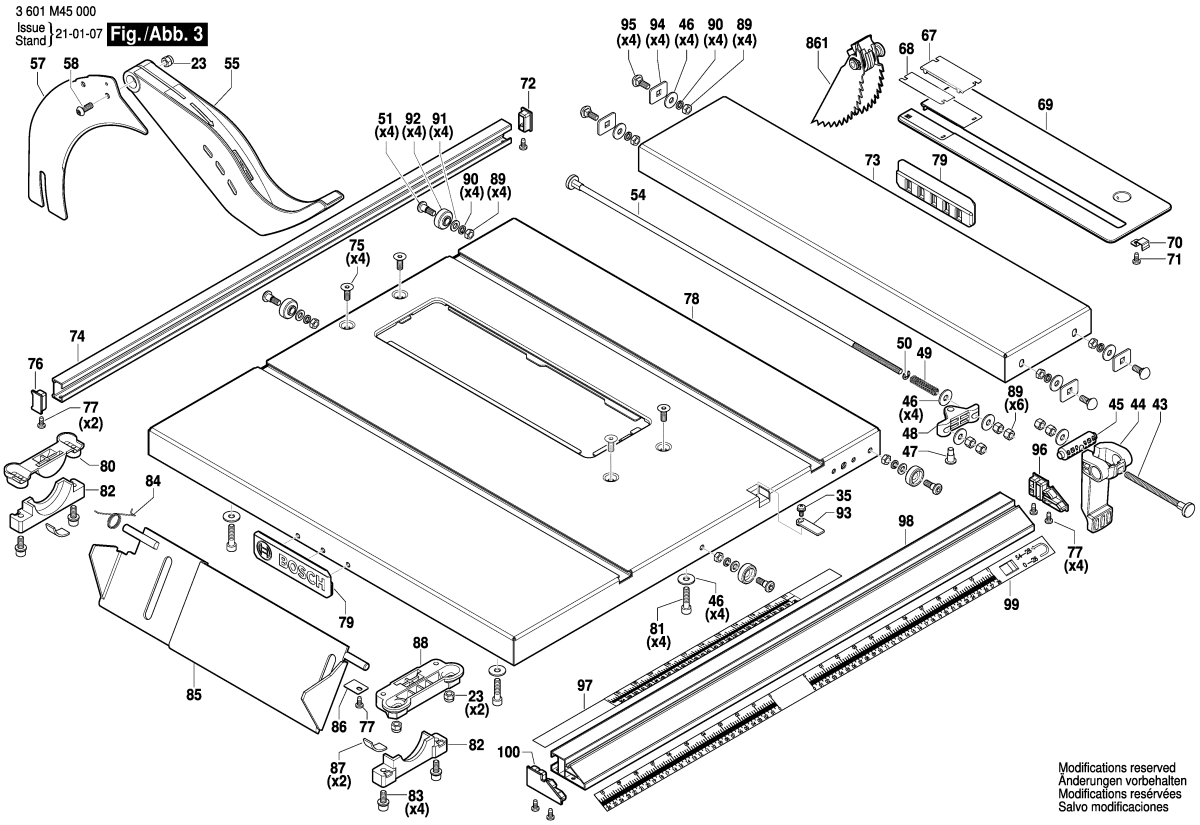

3 / 7

Model: 3 601 M45 0F0 = 230 | Date: 23-01-2023

Item	Pc	Order no.	Description	LP IN INR
139	1	1 600 A02 2EB	Sleeve .	29,00
140	1	1 600 A02 2BP	Washer .	29,00
141	1	1 600 A02 2FY	Equipment Holder .	79,00
142	2	1 600 A02 2DJ	Seat .	29,00
143	1	1 600 A02 2FZ	Body .	2.965,00
144	1	1 604 400 01P	Cable .	37,00
145	1	1 600 A02 2G5	Protection .	177,00
146	3	1 603 430 09B	Screw .	29,00
147	1	1 600 A02 2FD	Bracket .	29,00
148	1	1 600 A02 2DK	Seat .	174,00
149	1	1 600 A02 2D6	Switch Cover .	46,00
151	1	1 600 A02 2BW	Pin .	29,00
152	1	1 600 A02 2C4	Switch Spring .	29,00
153	1	1 600 A02 2EZ	Trigger .	44,00
154	3	1 603 430 09C	Screw .	29,00
155	1	1 600 A02 2DT	Plate .	407,00
156	2	1 600 A02 2CH	Nut .	29,00
157	3	1 600 A02 2CJ	Nut .	29,00
158	1	1 600 A02 2E9	Cap .	29,00
159	1	1 605 132 19G	Handle .	41,00
160	1	1 603 430 09D	Screw .	29,00
161	1	1 600 A02 2FE	Wheel .	86,00
162	2	1 600 A02 2BR	Washer .	29,00
163	1	1 600 A02 2C7	Spring .	29,00

Item	Pc	Order no.	Description	LP IN INR
164	1	1 600 A02 2FF	Lever .	60,00
165	1	1 603 430 09E	Screw .	29,00
166	1	1 600 A02 2CK	Nut .	55,00
167	1	1 600 A02 2BS	Washer .	44,00
168	1	1 600 A02 2D1	Pointer .	29,00
169	1	1 600 A02 2FG	Shaft .	119,00
170	5	1 603 430 09F	Screw .	29,00
171	1	1 600 A02 2DA	Rod .	186,00
172	1	1 600 A02 2EC	Sleeve .	29,00
173	1	1 600 A02 2DS	Plate .	109,00
174	1	1 600 A02 2DL	Seat .	138,00
175	4	1 603 430 09G	Screw .	29,00
176	1	1 600 A02 2E4	Plug .	29,00
177	1	1 600 A02 5F9	Plate .	138,00
178	1	1 600 A02 2E5	Plug .	29,00
179	2	1 603 430 09H	Screw .	29,00
188	4	1 600 A02 2EX	Frame .	838,00
189	4	1 600 A02 2EY	Supporting foot .	29,00
190	2	1 600 A02 2FK	Support .	267,00
191	4	1 603 430 09L	Screw .	29,00
192	8	1 603 430 09M	Screw .	29,00
193	4	1 600 A02 2FV	Table Leg .	1.904,00
194	8	1 603 430 09N	Screw .	29,00
195	1	1 600 A02 2D7	Push rod .	86,00

Please observe: Repairing, modifying and testing of electro-tools are to be performed professionally.The safety regulations according to IEC, EN, VDE, AFNOR and other regulations of the individual countries are to be observed. Subject to change.
This price list supersedes all previous edition. Prices are subjected to change without any prior notice.

3 601 M45 000
Issue / Stand 21-01-07 **Fig./Abb. 4**

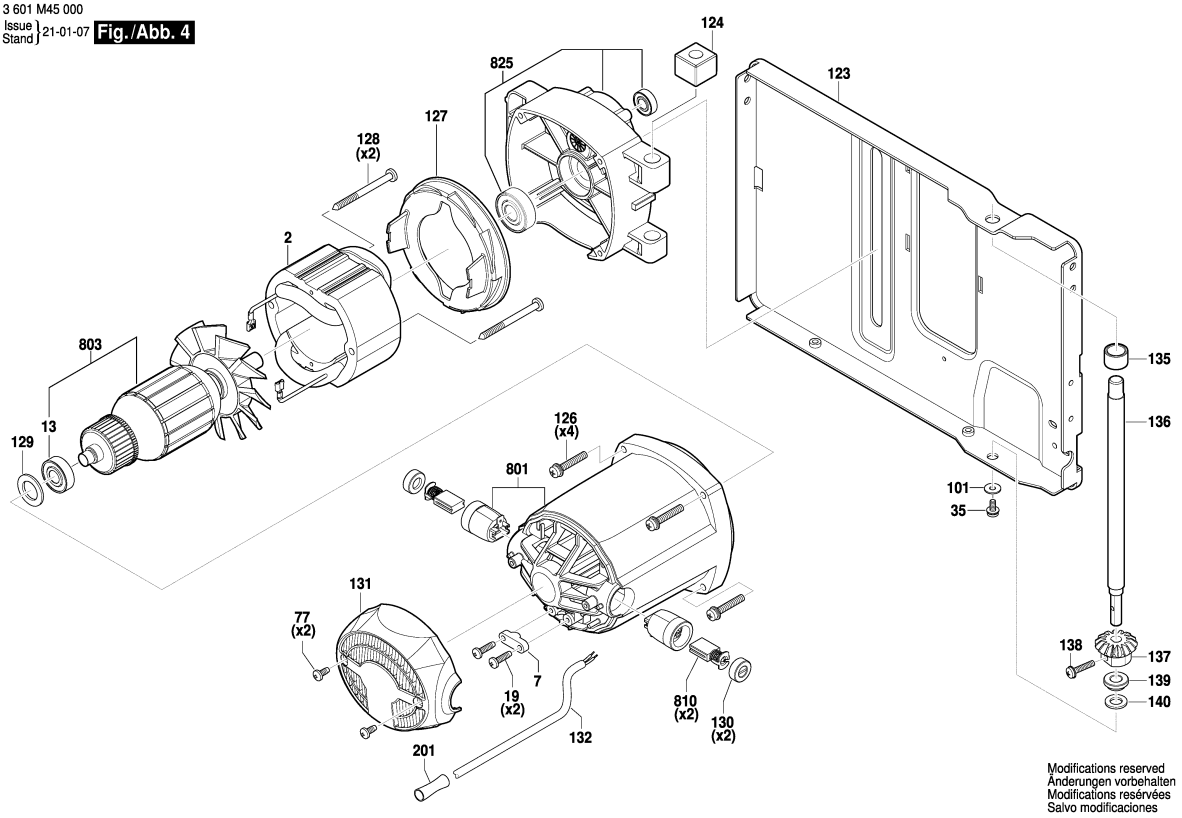

Model: 3 601 M45 0F0 = 230 | Date:

Item	Pc	Order no.	Description	LP IN INR
196	1	1 600 A02 2FW	Gripping Wedge .	66,00
197	1	1 600 A02 2FX	Assembly Wrench .	70,00
198	1	1 603 430 0A7	Screw .	29,00
199	1	1 600 A02 5FA	Spring .	29,00
200	1	1 619 PB6 257	Inductor .	89,00
201	3	1 600 A02 5FB	Tube .	53,00
801	1	1 619 PB6 273	Motor Housing .	685,00
803	1	1 619 PB6 274	Armature .	
810	1	1 619 PB6 280	Carbon-Brush Set .	299,00
811	1	1 619 PB6 276	Bearing cover .	228,00
825	1	1 619 PB7 259	Gear Housing .	655,00
830	1	1 619 PB6 271	Edge Guide .	2.184,00
861	1	1 619 PB6 270	Pawl .	453,00
881	1	1 619 PB6 272	Mitre Fence .	677,00

Item	Pc	Order no.	Description	LP IN INR

Please observe: Repairing, modifying and testing of electro-tools are to be performed professionally.The safety regulations according to IEC, EN, VDE, AFNOR and other regulations of the individual countries are to be observed. Subject to change.
This price list supersedes all previous edition. Prices are subjected to change without any prior notice.

3 601 M45 000
Issue Stand 21-02-19 **Fig./Abb. 5**

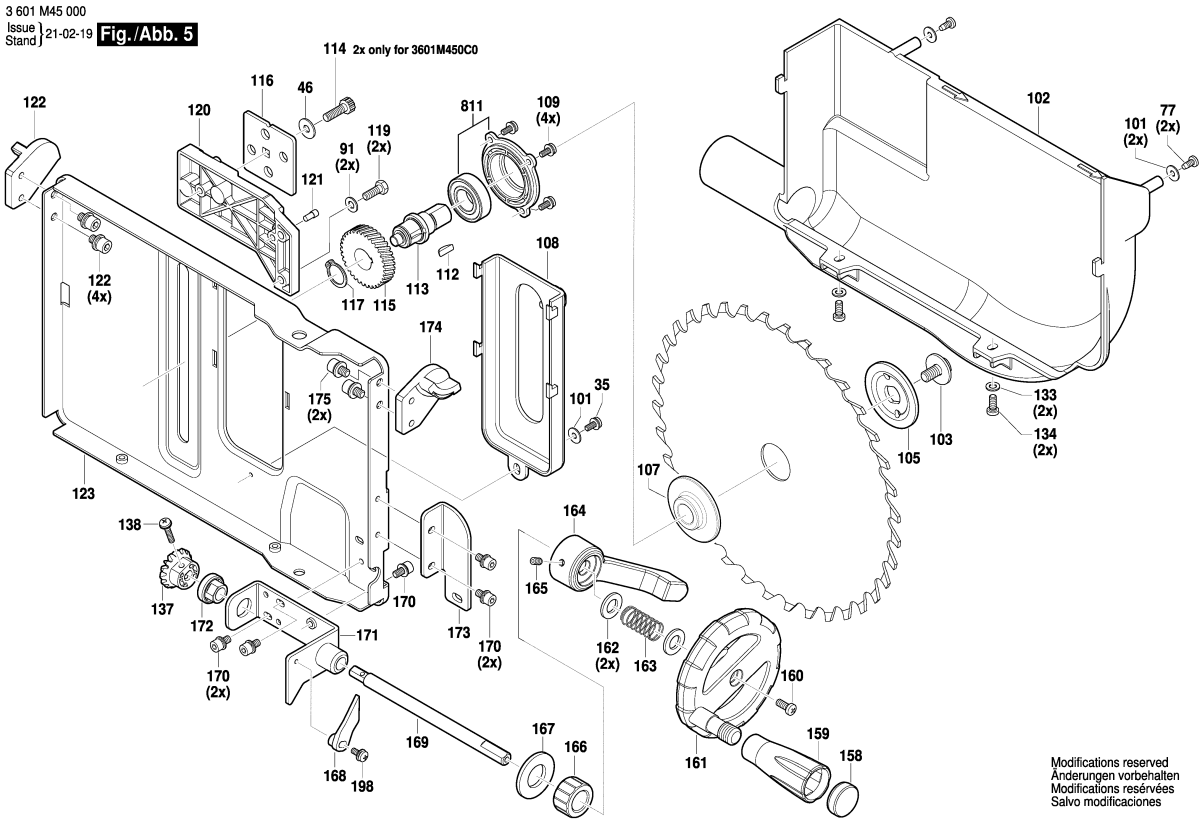

5 / 7

Model: 3 601 M45 0F0 = 230	Date:

Item	Pc	Order no.	Description	LP IN INR	Item	Pc	Order no.	Description	LP IN INR

Please observe: Repairing, modifying and testing of electro-tools are to be performed professionally.The safety regulations according to IEC, EN, VDE, AFNOR and other regulations of the individual countries are to be observed. Subject to change.
This price list supersedes all previous edition. Prices are subjected to change without any prior notice.

3 601 M45 000
Issue Stand 21-01-07 **Fig./Abb. 6**

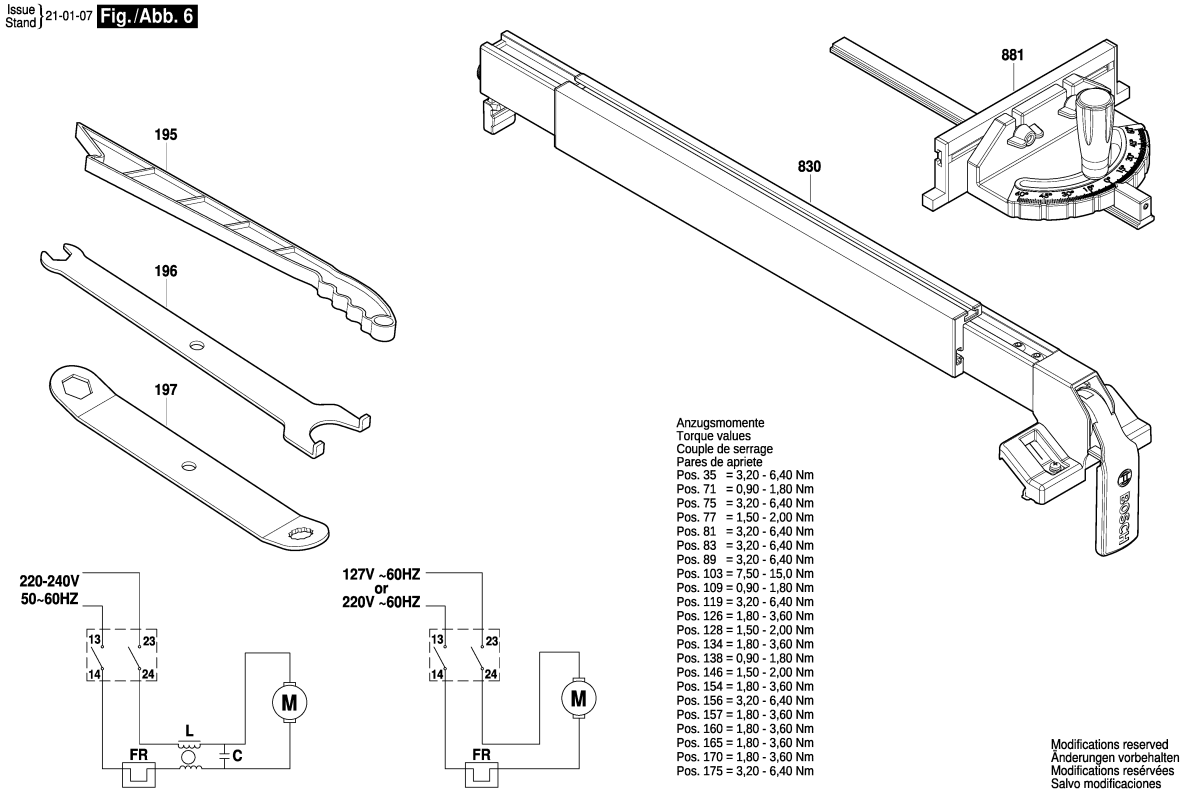

Anzugsmomente
Torque values
Couple de serrage
Pares de apriete
Pos. 35 = 3,20 - 6,40 Nm
Pos. 71 = 0,90 - 1,80 Nm
Pos. 75 = 3,20 - 6,40 Nm
Pos. 77 = 1,50 - 2,00 Nm
Pos. 81 = 3,20 - 6,40 Nm
Pos. 83 = 3,20 - 6,40 Nm
Pos. 89 = 3,20 - 6,40 Nm
Pos. 103 = 7,50 - 15,0 Nm
Pos. 109 = 0,90 - 1,80 Nm
Pos. 119 = 3,20 - 6,40 Nm
Pos. 126 = 1,80 - 3,60 Nm
Pos. 128 = 1,50 - 2,00 Nm
Pos. 134 = 1,80 - 3,60 Nm
Pos. 138 = 0,90 - 1,80 Nm
Pos. 146 = 1,50 - 2,00 Nm
Pos. 154 = 1,80 - 3,60 Nm
Pos. 156 = 3,20 - 6,40 Nm
Pos. 157 = 1,80 - 3,60 Nm
Pos. 160 = 1,80 - 3,60 Nm
Pos. 165 = 1,80 - 3,60 Nm
Pos. 170 = 1,80 - 3,60 Nm
Pos. 175 = 3,20 - 6,40 Nm

Modifications reserved
Änderungen vorbehalten
Modifications resérvées
Salvo modificaciones

Model: 3 601 M45 0F0 = 230	Date:

Item	Pc	Order no.	Description	LP IN INR	Item	Pc	Order no.	Description	LP IN INR

3 601 M45 000
Issue / Stand 21-01-15 **Fig./Abb. 7**

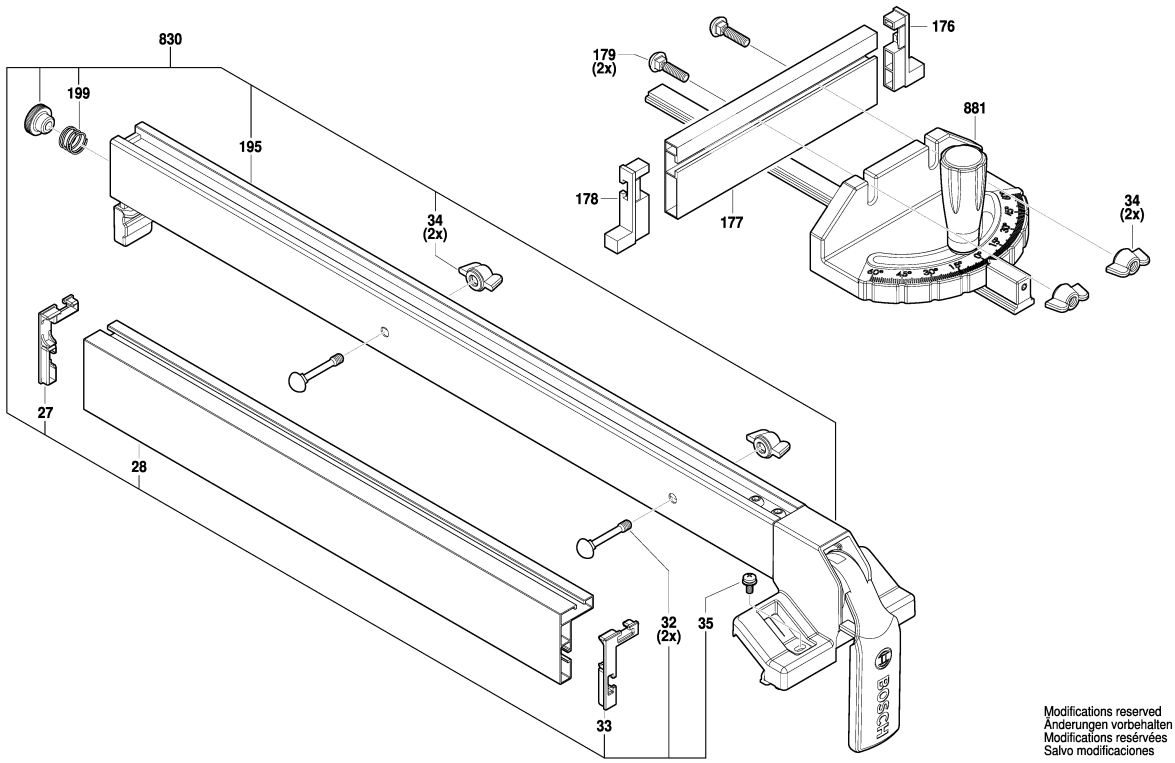

Modifications reserved
Änderungen vorbehalten
Modifications reservées
Salvo modificaciones

7 / 7

Model: 3 601 M45 0F0 = 230 | Date:

Item	Pc	Order no.	Description	LP IN INR	Item	Pc	Order no.	Description	LP IN INR

Please observe: Repairing, modifying and testing of electro-tools are to be performed professionally.The safety regulations according to IEC, EN, VDE, AFNOR and other regulations of the individual countries are to be observed. Subject to change.
This price list supersedes all previous edition. Prices are subjected to change without any prior notice.

BOSCH Power Tools	Drywall sander	Model GTR 550 3 601 GD4 0F0 | BO

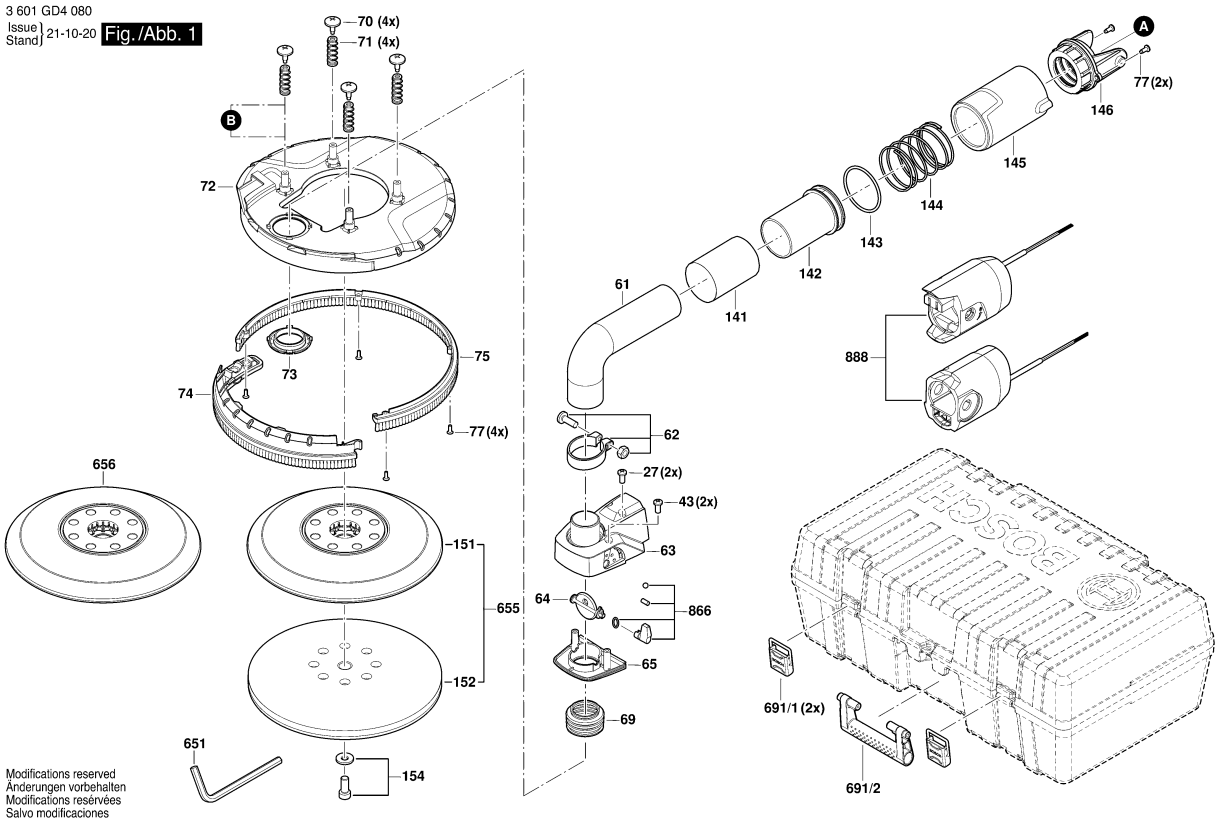

Model: 3 601 GD4 0F0 = 230 | Date:

Item	Pc	Order no.	Description	LP IN INR
1	1	1 619 PB5 941	Motor Housing .	293,00
2	1	1 619 PB5 942	Field 220-240V .	1.108,00
3	1	1 619 PB5 943	Armature 220-240V .	1.888,00
4	1	1 619 PB5 944	Switch .	293,00
5	1	1 619 PB6 068	Power supply cord	
6	1	1 619 PB5 946	Grommet .	29,00
7	2	1 619 PB6 021	Fastening Clamp .	29,00
8	1	1 619 PB6 058	Nameplate IND 230V .	
9	1	1 619 PB5 948	Manufacturer's nameplate	
13	1	1 619 PB5 950	groove ball bearing	437,00
19	1	1 619 PB5 952	Fastening Clamp .	29,00
21	2	1 619 PB6 082	Tapping Screw ST4x45 .	29,00
22	1	1 619 PB5 953	Bearing Flange .	781,00
23	1	1 619 PB5 954	Magnet .	516,00
24	1	1 619 PB5 955	Mounting Sleeve .	29,00
25	1	1 619 PB5 956	Air-Deflector Ring .	29,00
26	2	1 619 PB5 957	Grommet .	29,00
27	42	1 619 PB5 958	Tapping Screw ST4x16 .	29,00
28	1	1 619 PB5 959	Housing Cover .	131,00
29	1	1 619 PB5 960	Electronic Assembly	1.628,00
31	1	1 619 PB5 962	Workpiece support .	29,00
32	1	1 619 PB5 963	Housing Cover .	52,00
33	1	1 619 PB5 964	Housing Cover .	58,00
34	1	1 619 PB5 965	Needle bearing HK1012 .	322,00

Item	Pc	Order no.	Description	LP IN INR
35	1	1 619 PB5 966	Gear Housing .	716,00
36	2	1 619 PB5 967	groove ball bearing 606-2Z	189,00
37	1	1 619 PB5 968	Retaining ring .	29,00
38	1	1 619 PB5 969	Crown Gear .	456,00
39	1	1 619 PB5 970	Transmission Shaft .	318,00
40	1	1 619 PB5 971	Retaining ring .	29,00
41	1	1 619 PB5 972	groove ball bearing 699 .	489,00
42	1	1 619 PB5 973	Bearing Flange .	163,00
43	6	1 619 PB5 974	Cross Recessed-Head	29,00
44	1	1 619 PB5 975	Woodruff Key .	29,00
45	1	1 619 PB5 976	Retaining ring Ø10 .	29,00
46	1	1 619 PB5 977	Cylindrical Gear .	651,00
47	1	1 619 PB5 978	Sealing Disc .	29,00
48	1	1 619 PB5 979	Bearing Flange .	254,00
49	1	1 619 PB5 980	Sealing Plate .	65,00
50	1	1 619 PB5 981	Output Shaft .	248,00
51	1	1 619 PB5 982	groove ball bearing NSK	585,00
52	1	1 619 PB5 983	Retaining ring .	29,00
53	1	1 619 PB5 984	Dust seal .	65,00
54	1	1 619 PB5 985	Flat Key .	29,00
55	10	1 619 PB6 017	Countersunk-Head Screw .	29,00
56	4	1 619 PB6 018	Cross Recessed-Head	29,00
57	2	1 619 PB6 084	Inductor .	91,00
58	1	1 607 000 E8V	Spring .	29,00

Please observe: Repairing, modifying and testing of electro-tools are to be performed professionally.The safety regulations according to IEC, EN, VDE, AFNOR and other regulations of the individual countries are to be observed. Subject to change.
This price list supersedes all previous edition. Prices are subjected to change without any prior notice.

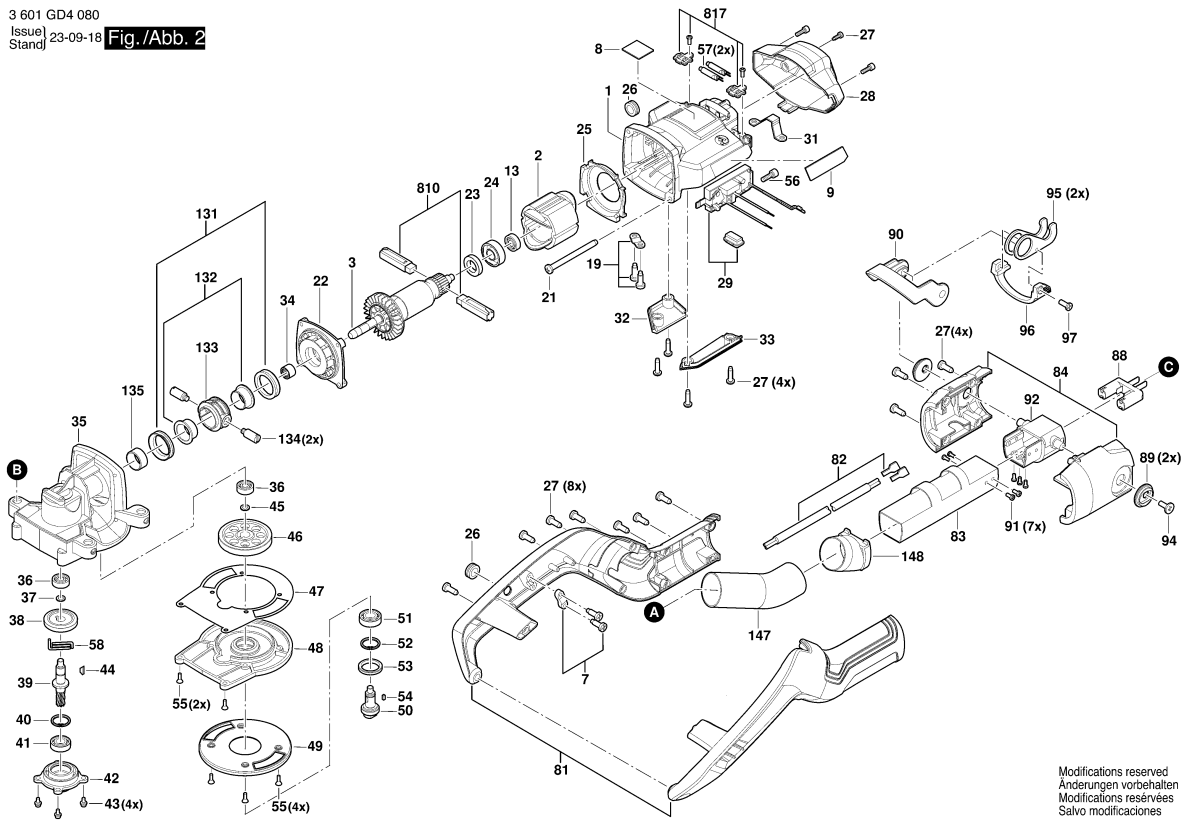

Model: 3 601 GD4 0F0 = 230 | Date:

Item	Pc	Order no.	Description	LP IN INR
61	1	1 619 PB5 986	Corrugated Pipe .	651,00
62	1	1 619 PB5 987	locking ring .	58,00
63	1	1 619 PB5 988	Control Housing .	131,00
64	1	1 619 PB5 989	Valve Insert .	65,00
65	1	1 619 PB5 990	Housing Cover .	29,00
69	1	1 619 PB5 994	Corrugated Pipe .	65,00
70	4	1 619 PB5 995	Cross Recessed-Head	29,00
71	4	1 619 PB5 996	Spring .	29,00
72	1	1 619 PB5 997	Covering hood .	585,00
73	1	1 619 PB5 998	Pressure Plate .	29,00
74	1	1 619 PB5 999	Strip brush .	520,00
75	1	1 619 PB6 000	Strip brush .	781,00
77	6	1 619 PB6 087	Tapping Screw ST4x14 .	29,00
81	1	1 619 PB6 001	Support Frame .	1.303,00
82	1	1 619 PB6 002	Connection Cable	144,00
83	1	1 619 PB6 003	Aluminum Tubing .	456,00
84	2	1 619 PB6 004	plastic covering .	227,00
88	2	1 619 PB6 008	plug-in connector .	163,00
89	4	1 619 PB6 009	Cam .	169,00
90	2	1 619 PB6 010	hand lever .	123,00
91	28	1 619 PB6 011	Cross Recessed-Head	29,00
92	2	1 619 PB6 012	Mounting Bracket .	183,00
94	4	1 619 PB6 083	Screw .	29,00
95	4	1 619 PB6 014	Hook .	51,00

Item	Pc	Order no.	Description	LP IN INR
96	2	1 619 PB6 015	Connecting piece .	169,00
97	4	1 619 PB6 016	Countersunk-Head Screw .	29,00
101	1	1 619 PB6 019	Switch Button .	29,00
102	1	1 619 PB6 020	Adjusting Slide .	29,00
104	1	1 619 PB6 022	Cantilever .	29,00
105	1	1 619 PB6 023	Handle .	585,00
106	1	1 619 PB6 024	Connection Cable	131,00
107	1	1 619 PB6 025	Speed governor 220-240V .	2.767,00
109	1	1 619 PB6 027	Flow Governor .	40,00
110	1	1 619 PB6 028	Intermediate housing .	58,00
111	2	1 619 PB6 029	Socket housing .	29,00
112	2	1 619 PB6 030	plastic covering .	29,00
113	1	1 619 PB6 031	Aluminum Tubing .	716,00
114	1	1 619 PB6 032	Hose Coupling .	131,00
116	2	1 619 PB6 034	Mounting Bracket .	273,00
117	2	1 619 PB6 035	Cam Shaft .	391,00
118	4	1 619 PB6 036	Cam .	254,00
120	2	1 619 PB6 037	plastic covering .	227,00
121	4	1 619 PB6 038	Shim ring .	29,00
122	4	1 619 PB6 039	Felt Pad .	29,00
123	1	1 619 PB6 006	Aluminum Tubing .	1.563,00
124	1	1 619 PB6 007	Connection Cable	163,00
125	1	1 607 000 EH5	Connection Cable PVC,	
131	2	1 619 PB6 040	Rubber Buffer .	29,00

Please observe: Repairing, modifying and testing of electro-tools are to be performed professionally.The safety regulations according to IEC, EN, VDE, AFNOR and other regulations of the individual countries are to be observed. Subject to change.
This price list supersedes all previous edition. Prices are subjected to change without any prior notice.

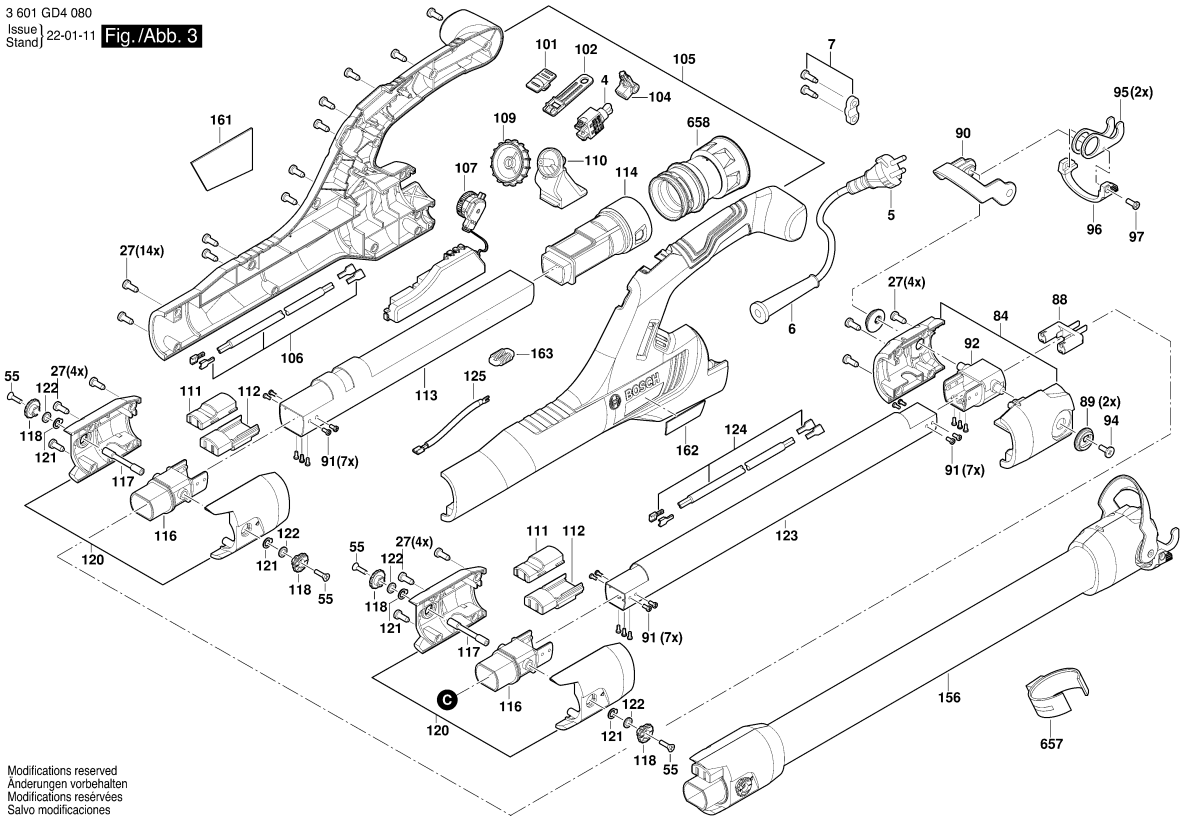

Model: 3 601 GD4 0F0 = 230 | Date:

Item	Pc	Order no.	Description	LP IN INR
132	2	1 619 PB6 041	bushing .	29,00
133	1	1 619 PB6 042	knob sleeve .	227,00
134	2	1 619 PB6 043	Straight Pin .	65,00
135	1	1 619 PB6 086	Spring .	
141	1	1 619 PB6 044	Protective Suit .	325,00
142	1	1 619 PB6 045	Threaded Bushing .	144,00
143	1	1 619 PB6 046	Seal Ring .	29,00
144	1	1 619 PB6 047	Spring .	65,00
145	1	1 619 PB6 048	Glide Bushing .	79,00
146	1	1 619 PB6 049	Hose Coupling .	91,00
147	1	1 619 PB6 050	Corrugated Pipe .	651,00
148	1	1 619 PB6 051	Hose Coupling .	79,00
151	1	1 619 PB6 052	Backing Pad .	1.348,00
152	1	1 619 PB6 053	Intermediate Layer .	934,00
154	1	1 619 PB6 055	Socket head cap screw	29,00
156	1	1 607 000 E57	Handle Bar .	
161	1	1 619 PB6 063	Nameplate IND 230V .	
162	1	1 619 PB6 066	Manufacturer's nameplate	
651	1	1 619 PB6 075	Hexagon Socket Screw	52,00
655	1	1 607 000 E5X	Rubber Backing Pad .	1.987,00
656	1	1 619 PB6 056	Backing Pad .	1.065,00
657	3	1 619 PB6 088	Clip .	58,00
691/1	2	1 619 PB6 089	Latch .	124,00
691/2	1	1 619 PB6 090	Handle .	148,00

Item	Pc	Order no.	Description	LP IN INR
810	1	1 607 000 E7H	Carbon-Brush Set Fuji GPA	478,00
817	1	1 619 PB6 081	Pressure Plate .	29,00
866	1	1 619 PB6 085	operation button .	58,00
888	1	1 607 000 E8U	Connector GTR550 .	912,00
658	1	1 607 000 F2K	Vacuum Adapter .	

Please observe: Repairing, modifying and testing of electro-tools are to be performed professionally.The safety regulations according to IEC, EN, VDE, AFNOR and other regulations of the individual countries are to be observed. Subject to change.
This price list supersedes all previous edition. Prices are subjected to change without any prior notice.

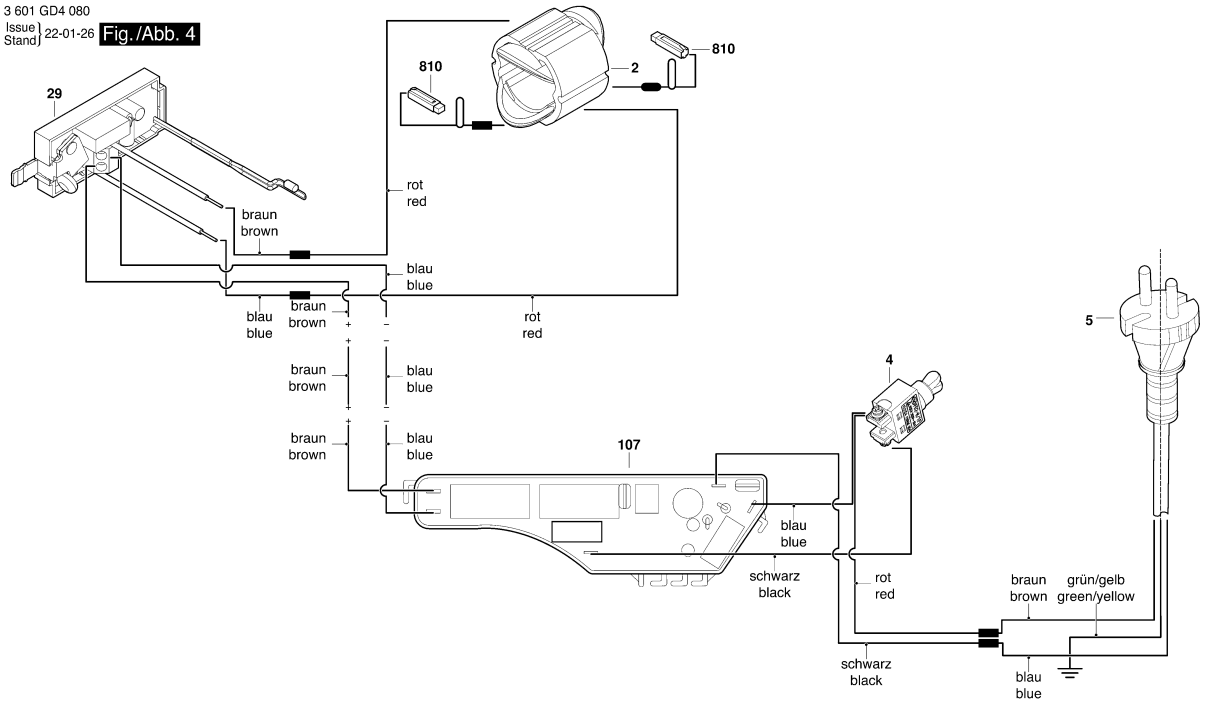

Modifications reserved
Änderungen vorbehalten
Modifications reservées
Salvo modificaciones

Model: 3 601 GD4 0F0 = 230 | Date:

Item	Pc	Order no.	Description	LP IN INR	Item	Pc	Order no.	Description	LP IN INR

BOSCH Power Tools	Chain Saw	Model GAC 250 3 601 BB6 0F0 | BO

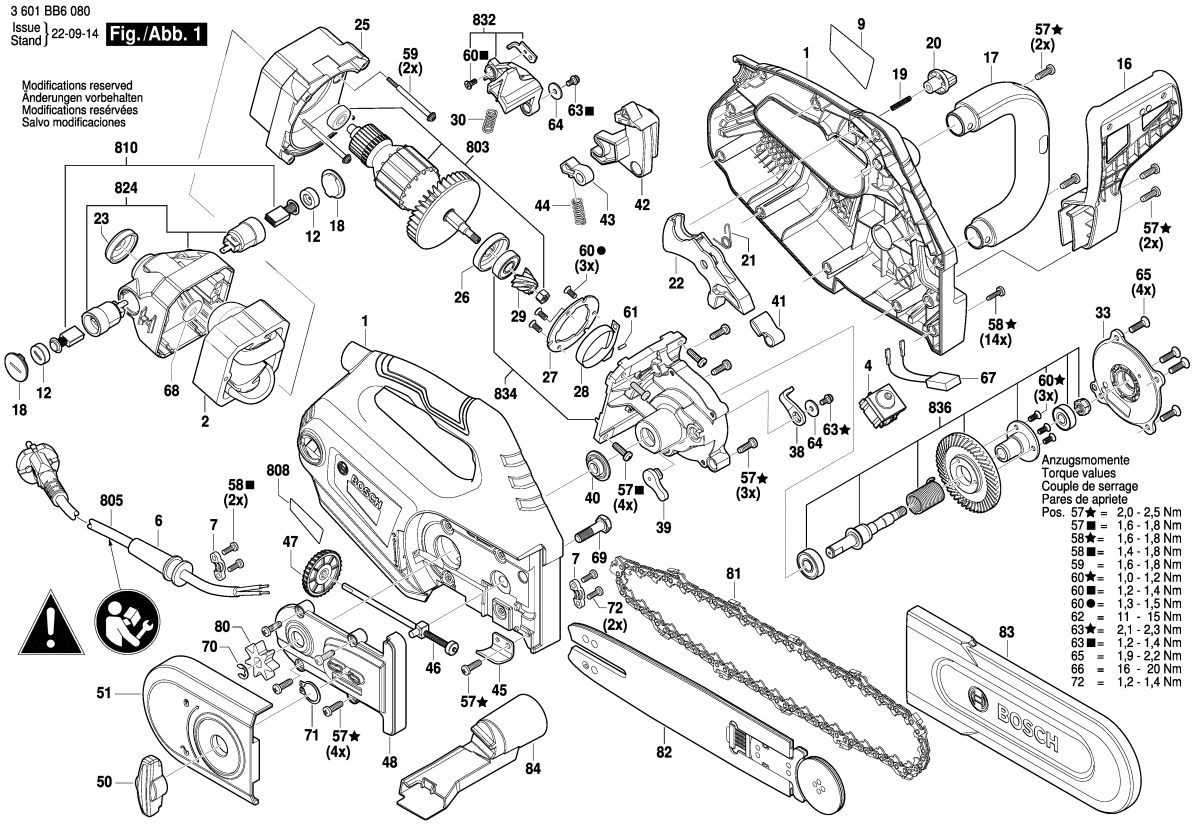

1 / 2

Model: 3 601 BB6 0F0 = 230	Date:

Item	Pc	Order no.	Description	LP IN INR
1	1	1 619 PB6 692	Housing Set .	975,00
2	1	1 619 PB6 693	Field assembly 220-240V .	1.097,00
4	1	1 619 PB6 695	Switch .	297,00
6	1	1 619 PB6 697	Grommet .	
7	1	1 619 PB6 698	Cable Clip .	26,00
9	1	1 619 PB6 700	Manufacturer's nameplate .	
12	1	1 619 PB6 703	Insulating Cap .	27,00
16	1	1 619 PB6 707	Protective Shield .	185,00
17	1	1 619 PB6 708	Auxiliary Handle .	336,00
18	1	1 619 PB6 709	plastic covering .	26,00
19	1	1 619 PB6 710	Compression Spring .	26,00
20	1	1 619 PB6 711	Button .	26,00
21	1	1 619 PB6 712	Compression Spring .	26,00
22	1	1 619 PB6 713	Trigger .	88,00
23	1	1 619 PB6 714	Rubber damper .	26,00
25	1	1 619 PB6 716	Air-Deflector Ring .	188,00
26	1	1 619 PB6 717	Stop Wheel .	80,00
27	1	1 619 PB6 718	Plate .	49,00
28	1	1 619 PB6 719	Brake Band .	158,00
29	1	1 619 PB6 720	Pinion .	240,00
30	1	1 619 PB6 721	Compression Spring .	26,00
33	1	1 619 PB6 724	Gear Cover .	337,00
38	1	1 619 PB6 729	Brake Plate .	68,00
39	1	1 619 PB6 730	Lever .	50,00

Item	Pc	Order no.	Description	LP IN INR
40	1	1 619 PB6 731	Plastic ring .	26,00
41	1	1 619 PB6 732	Pusher .	32,00
42	1	1 619 PB6 733	Lever Arm .	66,00
43	1	1 619 PB6 734	Lever Clamp .	26,00
44	1	1 619 PB6 735	Compression Spring .	26,00
45	1	1 619 PB6 736	Mounting Plate .	39,00
46	1	1 619 PB6 737	Adjusting Device .	150,00
47	1	1 619 PB6 738	Adjusting Roller .	53,00
48	1	1 619 PB6 739	Mounting Plate .	339,00
50	1	1 619 PB6 741	Wing Nut .	128,00
51	1	1 619 PB6 742	plastic covering .	298,00
57	16	1 619 PB6 748	Pan head screw .	26,00
58	14	1 619 PB6 749	Screw .	26,00
59	2	1 619 PB6 750	Pan head screw .	26,00
60	7	1 619 PB6 751	Countersunk-Head Screw .	26,00
61	1	1 619 PB6 752	Pin .	26,00
63	2	1 619 PB6 754	Pan head screw .	26,00
64	2	1 619 PB6 755	Shim .	26,00
65	4	1 619 PB6 756	Countersunk-Head Screw .	26,00
67	1	1 619 PB6 758	Capacitor .	37,00
68	1	1 619 PB6 759	Shim .	26,00
69	1	1 619 PB6 760	Hex Screw .	26,00
70	1	1 619 PB6 761	Clip .	26,00
71	1	1 619 PB6 762	Clip .	26,00

Please observe: Repairing, modifying and testing of electro-tools are to be performed professionally.The safety regulations according to IEC, EN, VDE, AFNOR and other regulations of the individual countries are to be observed. Subject to change.
This price list supersedes all previous edition. Prices are subjected to change without any prior notice.

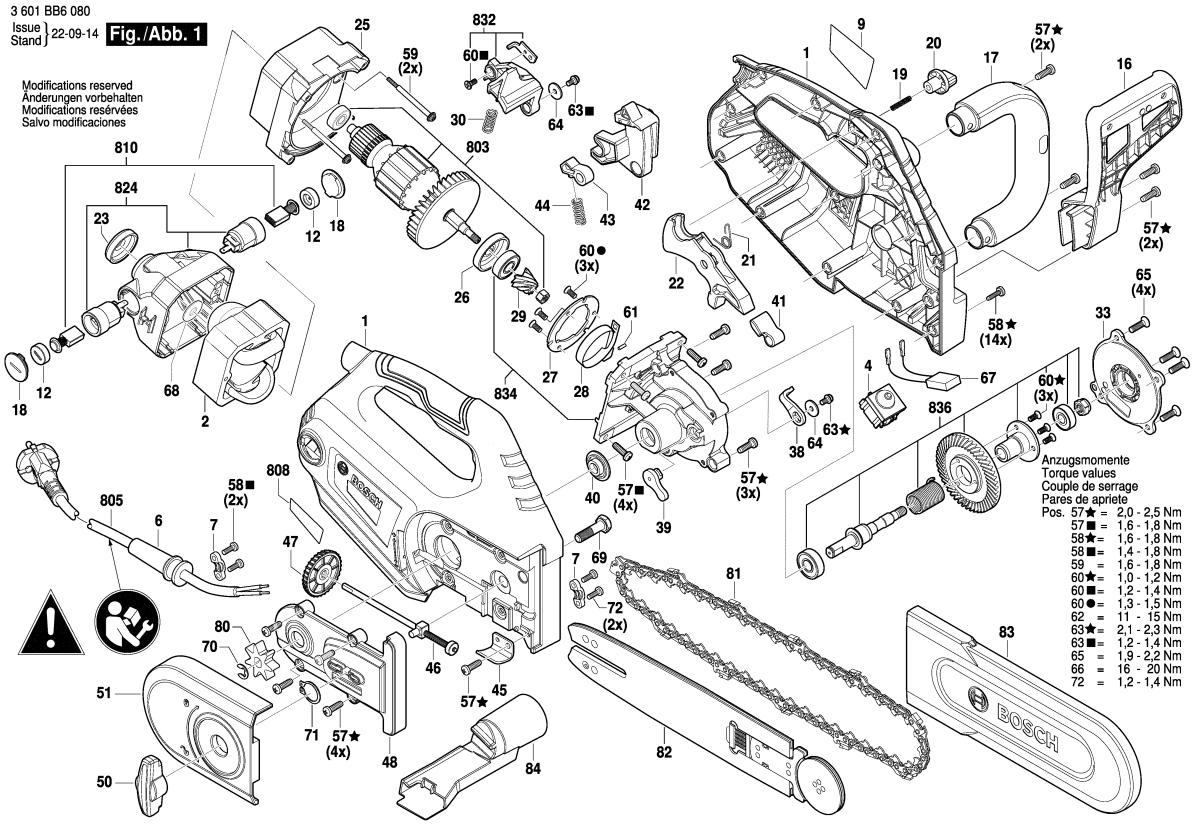

2 / 2

Model: 3 601 BB6 0F0 = 230 | Date:

Item	Pc	Order no.	Description	LP IN INR	Item	Pc	Order no.	Description	LP IN INR
72	1	1 619 PB9 756	Pan head screw .	26,00					
80	1	1 619 PB6 764	Sprocket wheel .	431,00					
81	1	1 619 PB6 765	Saw Chain .	2.174,00					
82	1	1 619 PB6 766	Guide Rail .	1.692,00					
83	1	1 619 PB6 767	Protective Sleeve .	207,00					
803	1	1 619 PB9 760	Armature assembly	1.862,00					
805	1	1 619 PB9 773	Power supply cord .						
808	1	1 619 PB9 767	Nameplate .						
810	1	1 619 PC0 027	Carbon-Brush Set .	268,00					
824	1	1 619 PB9 762	Bracket .	488,00					
832	1	1 619 PB9 763	Lever .	110,00					
834	1	1 619 PB9 764	Gear Housing .	870,00					
836	1	1 619 PB9 765	Bevel Gear Set .	1.255,00					

Please observe: Repairing, modifying and testing of electro-tools are to be performed professionally.The safety regulations according to IEC, EN, VDE, AFNOR and other regulations of the individual countries are to be observed. Subject to change.
This price list supersedes all previous edition. Prices are subjected to change without any prior notice.

BOSCH Power Tools	Mixer	Model GRW 140 3 601 AC4 0F0 | BO

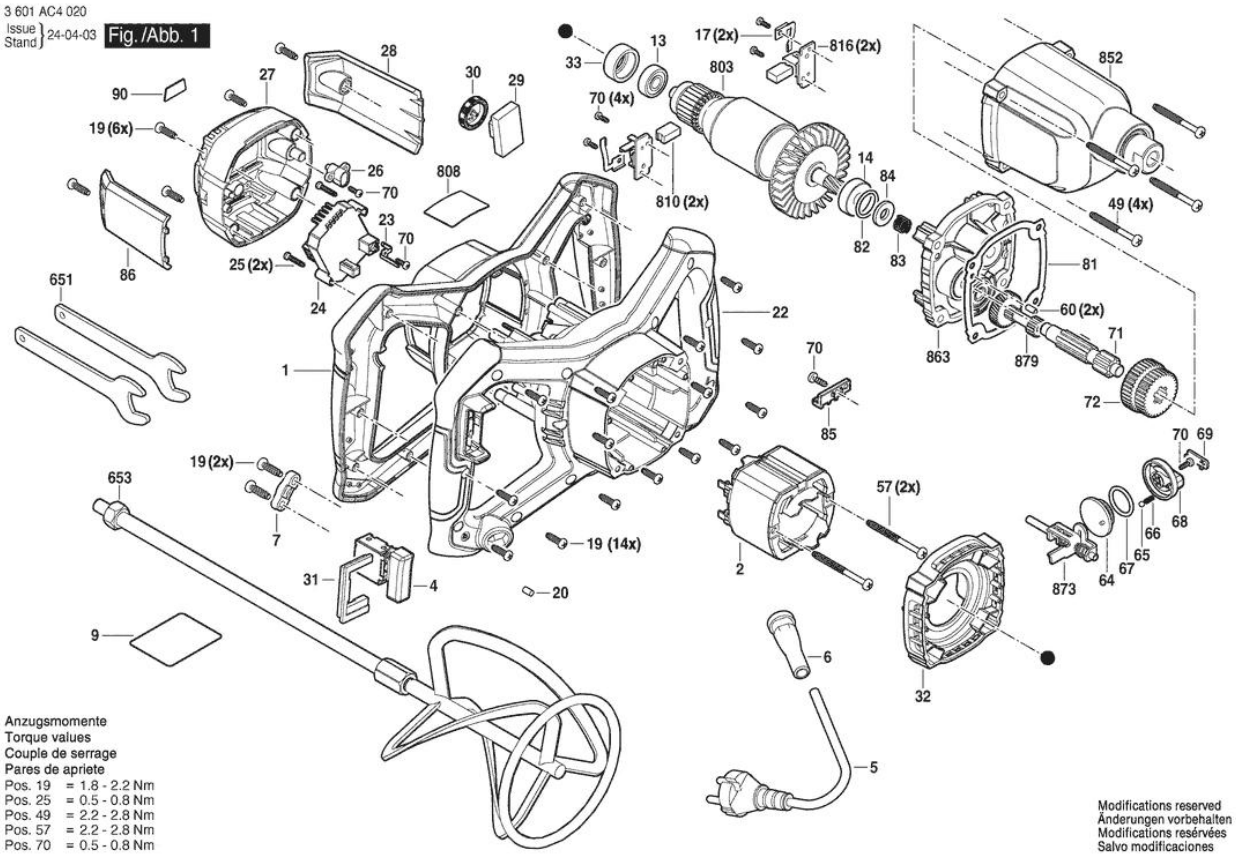

Model: 3 601 AC4 0F0 | Date:

Item	Pc	Order no.	Description	LP IN INR
1	1	1 619 PC1 773	Motor Housing .	407,00
2	1	1 619 PC1 766	Field .	630,00
4	1	1 619 PC1 775	On-Off Switch.	211,00
5	1	1 619 PC1 770	Power supply cord.	
6	1	1 619 PC1 771	Grommet.	25,00
7	1	1 619 6C1 776	Cable Clip.	25,00
9	1	1 619 PC1 796	Manufacturer's nameplate GRW 140.	
13	1	1 619 PC1 762	Ball Bearing.	74,00
14	1	1 619 PC1 758	Ball Bearing.	74,00
17	1	1 619 PS0 917	Shaped Spring.	
19	1	1 619 PC1 772	Tapping Screw.	101,00
20	1	1 619 PC2 590	Rubber Bar.	25,00
22	1	1 619 PC1 783	Handle Cover.	482,00
23	1	1 619 PC1 784	Shaped Spring.	25,00
24	1	1 619 PC1 126	Printed Circuit Board.	853,00
25	1	1 619 PC1 786	Tapping Screw.	25,00
26	1	1 619 PC1 787	Indicator cover.	25,00
27	1	1 619 PC1 788	Housing Cover.	125,00
28	1	1 619 PC1 789	Protective Cover.	25,00
29	1	1 619 PC1 777	Potentiometer .	40,00
30	1	1 619 PC1 778	Thumbwheel.	25,00
31	1	1 619 PC1 774	Spacer.	25,00
32	1	1 619 PC1 764	Air-Deflector Ring.	40,00
33	1	1 619 PC1 763	Rubber Ring.	25,00

Item	Pc	Order no.	Description	LP IN INR
49	1	1 619 PC1 720	Tapping Screw.	25,00
57	1	1 619 PC1 765	Tapping Screw.	25,00
60	1	1 619 PC1 731	Straight Pin.	25,00
64	1	1 619 PC1 736	Shift Plate.	25,00
65	1	1 619 PC1 737	Ball.	25,00
66	1	1 619 PC1 738	Spring.	25,00
67	1	1 619 PC1 739	O-Ring.	25,00
68	1	1 619 PC1 740	Shift-Lever Knob	25,00
69	1	1 619 PC1 741	Cover Plate.	25,00
70	1	1 619 PC1 742	Tapping Screw.	40,00
71	1	1 619 PC1 743	Toothed Shaft.	184,00
72	1	1 619 PC1 744	Toothed Gear.	223,00
81	1	1 619 PC1 753	Sealing Plate.	25,00
82	1	1 619 PC1 754	O-Ring.	25,00
83	1	1 619 PC1 755	Spring.	25,00
84	1	1 619 PC1 756	Felt seal ring.	25,00
85	1	1 619 PC1 779	Cable Clip.	40,00
86	1	1 619 PC1 790	Protective Cover.	40,00
90	1	1 619 PC1 932	Warning Label.	
651	1	1 619 PC1 797	Assembly Wrench.	56,00
653	1	1 619 PC1 798	Mixer Attachment.	892,00
803	1	1 619 PC1 757	Armature set.	1.356,00
808	1	1 619 PC1 795	Nameplate.	
810	1	1 619 PC2 022	Carbon-Brush Set.	62,00

Please observe: Repairing, modifying and testing of electro-tools are to be performed professionally.The safety regulations according to IEC, EN, VDE, AFNOR and other regulations of the individual countries are to be observed. Subject to change.
This price list supersedes all previous edition. Prices are subjected to change without any prior notice.

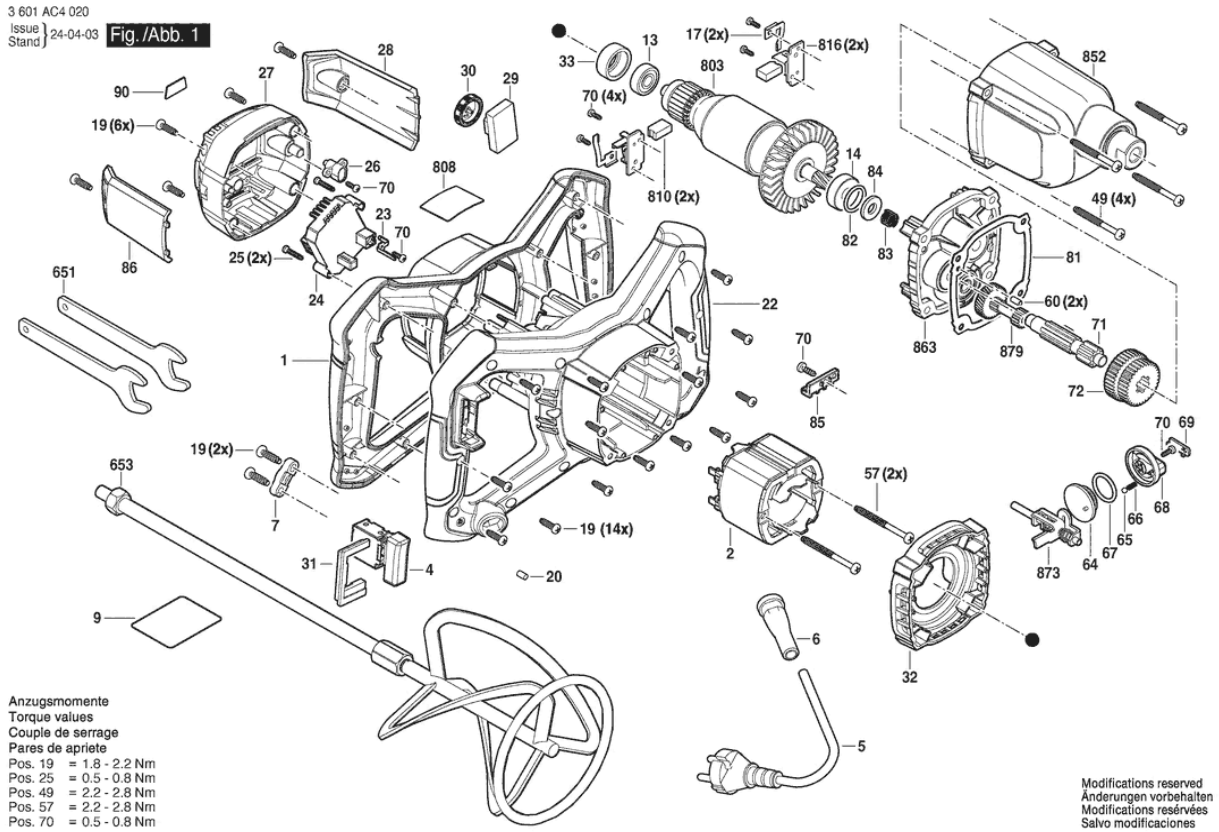

Model: 3 601 AC4 0F0 | Date:

Item	Pc	Order no.	Description	LP IN INR
852	1	1 619 PC1 721	Gear Housing.	952,00
863	1	1 619 PC1 732	Intermediate Flange.	280,00
873	1	1 619 PC1 745	Shift Lever.	89,00
879	1	1 619 PC1 750	Gear Unit.	387,00

Item	Pc	Order no.	Description	LP IN INR

Please observe: Repairing, modifying and testing of electro-tools are to be performed professionally.The safety regulations according to IEC, EN, VDE, AFNOR and other regulations of the individual countries are to be observed. Subject to change.
This price list supersedes all previous edition. Prices are subjected to change without any prior notice.

BOSCH Power Tools	Reciprocating saw	Model GSA 120 3 601 FB1 0F0 | BO

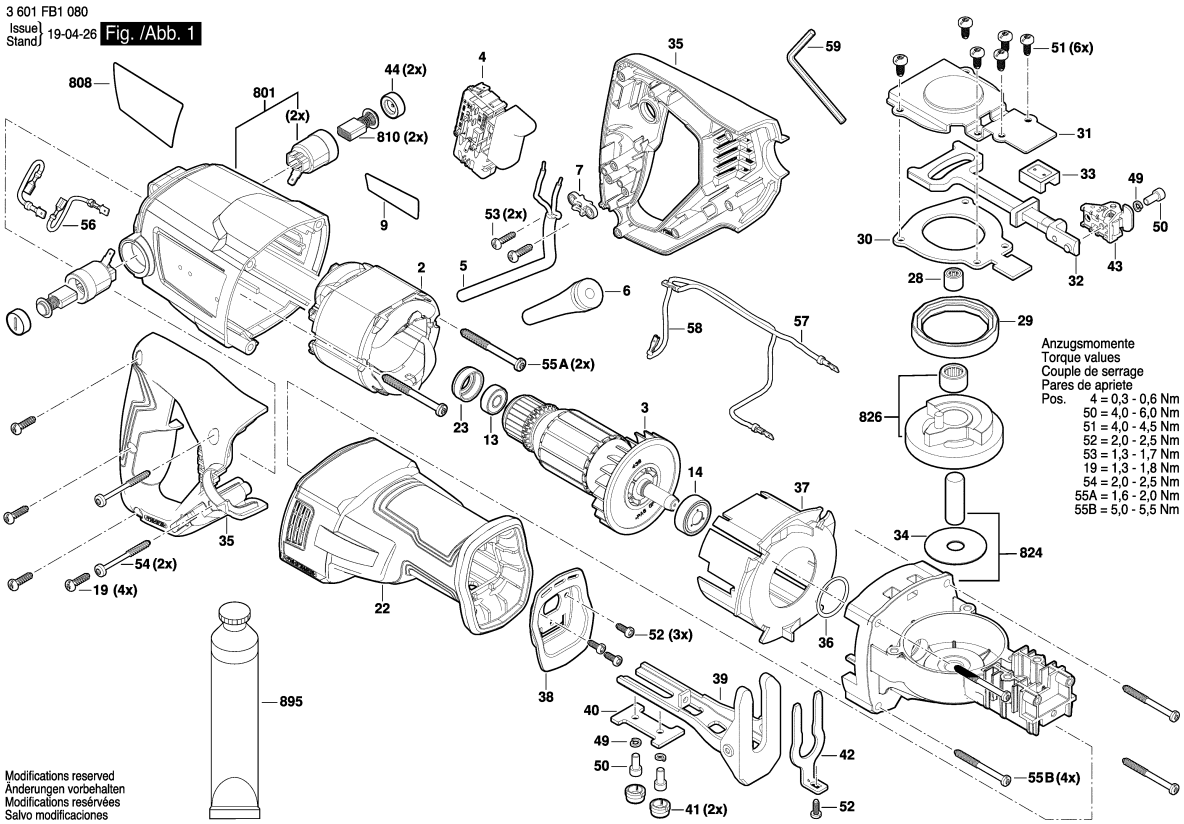

Model: 3 601 FB1 0F0 = 220	Date:

Item	Pc	Order no.	Description	LP IN INR
2	1	1 604 220 53J	Field .	1.348,00
3	1	1 604 010 B7E	Armature .	2.472,00
4	1	1 607 200 358	Switch .	951,00
5	1	1 619 P15 859	Power supply cord Ind 2,65	
6	1	2 600 703 018	Grommet Ø7,3-Ø8,6x76	28,00
7	1	1 619 P06 313	Cable Clip .	30,00
9	1	1 619 P15 154	Manufacturer's nameplate	
13	1	1 619 P00 456	Ball Bearing 7x19x6 MM .	58,00
14	1	1 619 P10 481	Ball Bearing .	112,00
19	4	2 603 490 023	Torx Oval-Head Screw	30,00
22	1	1 619 P13 893	Insulating Sleeve .	822,00
23	1	1 619 P06 227	Rubber Ring .	30,00
28	1	2 600 914 017	Needle bearing Ø6/12 MM .	545,00
29	1	1 619 P13 916	Thrust Ring .	143,00
30	1	1 619 P13 910	Cover Plate .	260,00
31	1	1 619 P14 211	Cover Plate .	462,00
32	1	1 619 P13 911	Lifting Rod .	1.679,00
33	1	1 619 P13 907	Bushing .	93,00
34	1	1 619 P14 546	Shim .	180,00
35	1	1 619 P13 896	Set Of Handles .	696,00
36	1	F 000 640 007	O-Ring .	36,00
37	1	1 619 P14 673	Air-Deflector Ring .	298,00
38	1	1 619 P14 201	Protective Cover .	305,00
39	1	1 619 P14 202	Supporting foot .	599,00

Item	Pc	Order no.	Description	LP IN INR
40	1	1 619 P14 206	Plate .	197,00
41	1	1 619 P14 207	Cover .	172,00
42	1	1 619 P14 196	Plate .	260,00
43	1	1 619 P14 424	Quick-Clamping Device .	934,00
44	2	1 619 P06 286	Insulating Cap .	77,00
49	3	2 916 683 006	Spring Lock Washer DIN	80,00
50	3	1 619 P11 432	Hex Socket Head Cap	49,00
51	6	1 613 435 014	Torx Oval-Head Screw	48,00
52	4	1 619 P01 678	Screw .	30,00
53	2	2 603 490 022	Screw 4x16 .	30,00
54	2	1 619 X00 658	Screw .	30,00
55	6	1 619 P01 508	Screw .	39,00
56	2	1 619 P07 060	Connecting Cable .	56,00
57	1	1 619 P14 209	Connecting Cable .	81,00
58	1	1 619 P14 210	Connecting Cable .	89,00
59	1	1 619 P11 420	Hexagon Socket Wrench .	88,00
801	1	1 619 P15 313	Motor Housing .	578,00
808	1	1 619 P16 115	Nameplate .	
810	1	1 619 P10 063	Carbon-Brush Set .	195,00
824	1	1 619 P15 315	Gear Housing .	1.414,00
826	1	1 619 P15 317	Bevel Gear Set .	1.477,00
895	1	3 605 430 003	Grease Tube Albida .	1.473,00

Please observe: Repairing, modifying and testing of electro-tools are to be performed professionally.The safety regulations according to IEC, EN, VDE, AFNOR and other regulations of the individual countries are to be observed. Subject to change.
This price list supersedes all previous edition. Prices are subjected to change without any prior notice.

BOSCH Power Tools	Reciprocating saw	Model GSA 1300 PCE 3 601 F4E 2K0 | BO

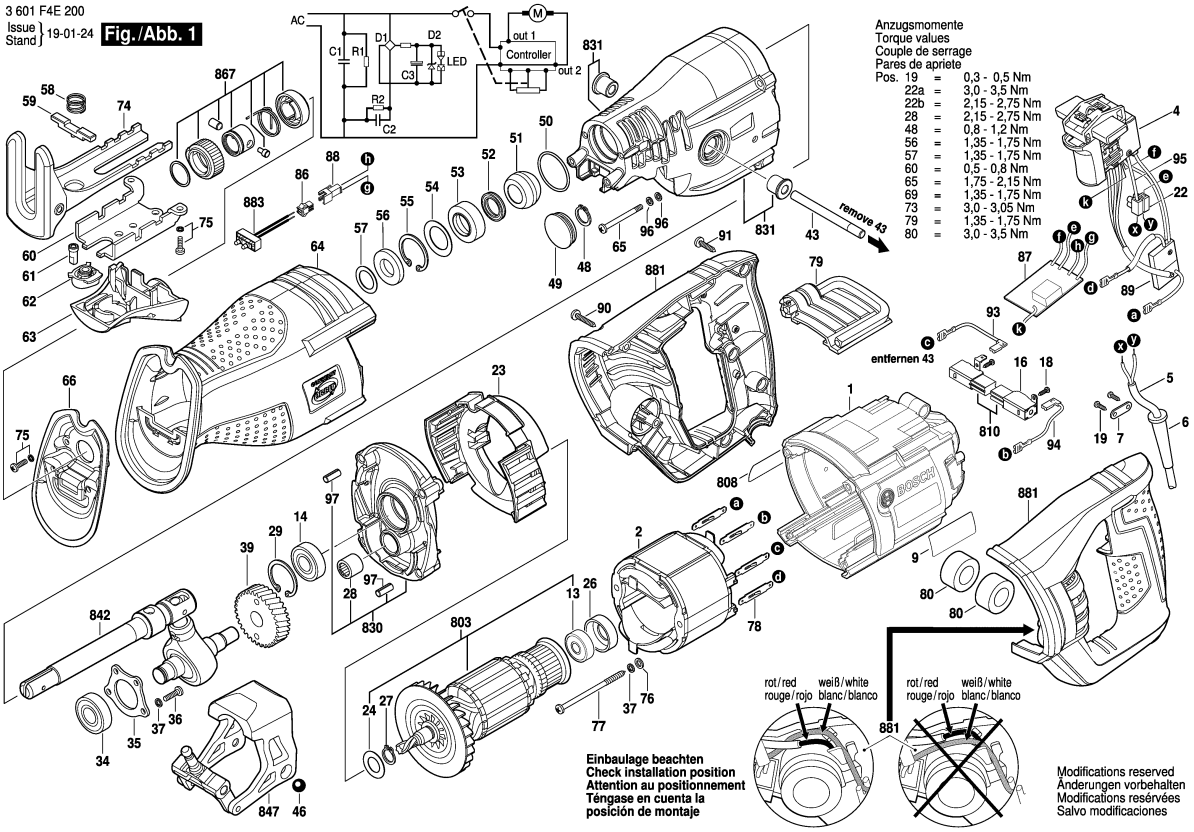

Model: 3 601 F4E 2K0 = 230 | Date:

Item	Pc	Order no.	Description	LP IN INR
1	1	2 610 013 221	Motor Housing .	630,00
2	1	2 610 015 551	Stator 230-240V .	1.503,00
4	1	2 610 013 496	Switch .	1.231,00
5	1	2 610 957 172	Power supply cord .	
6	1	2 610 956 866	Cord guard .	34,00
7	1	2 610 010 008	Clamp Bracket .	30,00
13	1	2 610 010 004	Ball Bearing .	196,00
14	1	2 610 956 889	groove ball bearing .	201,00
16	2	2 610 956 874	Brush Holder .	71,00
18	4	2 610 010 013	Thread-forming tap. Screw	30,00
19	2	2 610 956 867	Tapping Screw .	30,00
22	1	2 610 956 870	Terminal Block .	73,00
23	1	2 610 013 223	Baffle .	236,00
24	1	2 610 010 000	Washer .	30,00
26	1	2 610 013 249	Bearing Sleeve .	35,00
27	1	2 610 010 001	Retaining clip .	30,00
28	1	2 610 009 997	Needle-Roller Bearing .	103,00
29	1	2 610 009 995	Retaining clip .	38,00
34	1	2 610 009 986	Ball Bearing .	242,00
35	1	2 610 009 987	Retaining Plate .	83,00
36	4	2 610 009 988	Thread-forming tap. Screw	35,00
37	6	1 619 P04 820	Spring Washer .	30,00
39	1	2 610 009 994	Conversion Gear .	396,00
43	1	2 610 013 237	Dowel pin .	83,00

Item	Pc	Order no.	Description	LP IN INR
46	2	2 610 013 240	steel ball .	35,00
48	1	2 610 009 983	Retaining clip .	30,00
49	1	2 610 009 982	Sealing cap .	51,00
50	1	2 610 009 981	O-Ring .	35,00
51	1	2 610 009 980	Bushing .	130,00
52	1	2 610 009 979	Seal Ring .	475,00
53	1	2 610 009 978	Sintered-Metal Bushing .	136,00
54	1	2 610 009 976	Spring Washer .	83,00
55	1	2 610 009 975	Retaining clip .	35,00
56	1	2 610 009 974	Felt Washer .	35,00
57	1	2 610 009 973	Washer .	35,00
58	1	2 610 010 016	Compression Spring .	33,00
59	1	2 610 009 989	Clamp .	110,00
60	1	2 610 009 962	Support Plate .	114,00
61	1	2 610 013 232	Shaft .	72,00
62	1	2 610 013 233	Push Button .	35,00
63	1	2 610 013 234	Housing Cover .	55,00
64	1	2 610 010 032	Insulating Sleeve .	921,00
65	4	2 610 013 498	Thread-forming tap. Screw	97,00
66	1	2 610 015 554	Cover Plate .	113,00
74	1	2 610 010 015	Supporting foot .	517,00
75	8	2 610 010 036	Screw .	35,00
76	2	2 610 010 025	Locking Washer .	33,00
77	2	2 610 010 006	Thread-forming tap. Screw	35,00

Please observe: Repairing, modifying and testing of electro-tools are to be performed professionally.The safety regulations according to IEC, EN, VDE, AFNOR and other regulations of the individual countries are to be observed. Subject to change.
This price list supersedes all previous edition. Prices are subjected to change without any prior notice.

BOSCH Power Tools	Reciprocating saw	Model GSA 1300 PCE 3 601 F4E 2K0 | BO

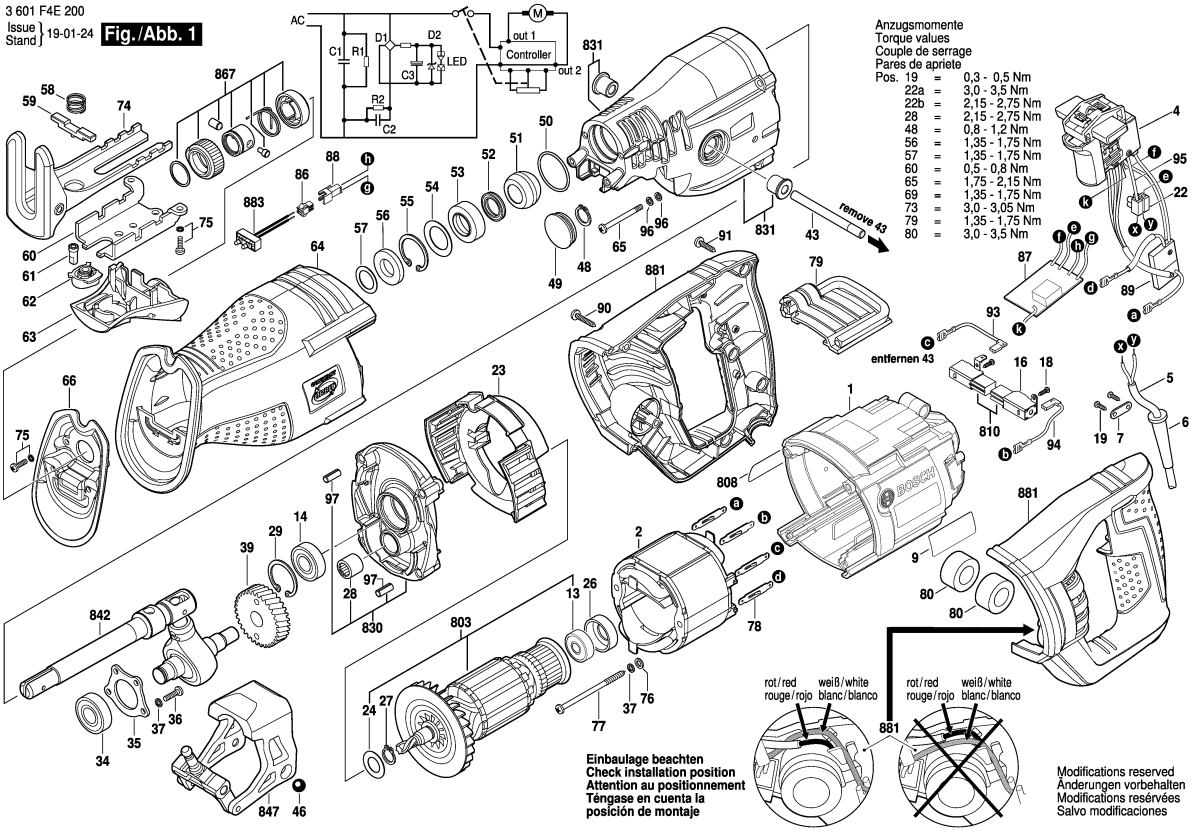

Model: 3 601 F4E 2K0 = 230 | Date:

Item	Pc	Order no.	Description	LP IN INR	Item	Pc	Order no.	Description	LP IN INR
78	8	2 610 956 878	connecting terminal .	38,00					
79	1	2 610 015 555	Assembly Hook .	311,00					
80	2	2 610 013 242	Grommet .	52,00					
86	1	1 619 P04 831	Receptacle .	43,00					
87	1	2 610 015 627	Circuit Unit .	357,00					
88	1	2 610 015 628	Connector .	34,00					
89	1	1 619 PA2 367	Electronics Module .	1.201,00					
90	2	2 610 956 864	Tapping Screw .	30,00					
91	4	2 610 956 865	Tapping Screw .	58,00					
93	1	2 610 014 645	Connecting Cable .	35,00					
94	1	2 610 014 646	Connecting Cable .	34,00					
95	3	2 610 015 549	Lead Wire .	114,00					
96	8	2 610 015 548	Spring Washer .	32,00					
97	2	2 610 021 275	Split Pin .	59,00					
803	1	2 610 015 637	Armature set 230-240V .	2.942,00					
808	1	1 619 PA2 374	Nameplate .						
810	1	2 610 013 260	Carbon-Brush Set .	385,00					
830	1	2 610 013 244	Bearing Bracket .	851,00					
831	1	2 610 013 248	Front Housing .	1.965,00					
842	1	2 610 013 227	Spindle Assembly .	3.725,00					
847	1	2 610 013 246	Counterweight .	2.905,00					
867	1	2 610 010 029	Blade Holder .	760,00					
881	1	2 610 013 245	Set Of Handles .	1.236,00					
883	1	2 610 015 638	Electronic Assembly .	339,00					

Please observe: Repairing, modifying and testing of electro-tools are to be performed professionally.The safety regulations according to IEC, EN, VDE, AFNOR and other regulations of the individual countries are to be observed. Subject to change.
This price list supersedes all previous edition. Prices are subjected to change without any prior notice.

BOSCH Power Tools	High Pressure Cleaner	Model GHP 5-13 C 3 600 J10 0F0 | BO

3 600 J10 0F0
Stand } ~~22-08~~
Issue } 22-11-17

Fig./Abb. 1

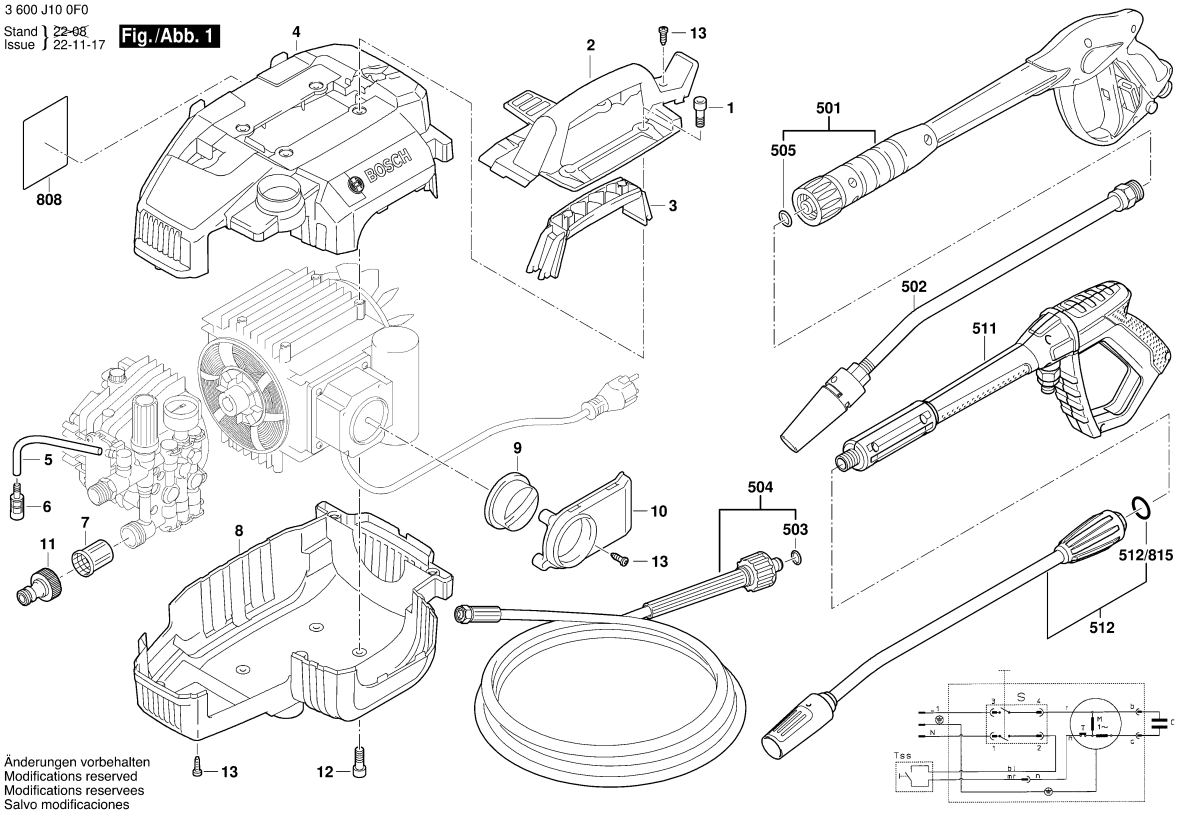

Änderungen vorbehalten
Modifications reserved
Modifications reservees
Salvo modificaciones

Model: 3 600 J10 0F0 = 220 | Date:

Item	Pc	Order no.	Description	LP IN INR
1	4	F 016 L72 000	Screw .	41,00
2	1	F 016 L72 001	Handle .	333,00
3	1	F 016 L72 002	Cover .	344,00
4	1	F 016 L72 003	Housing .	559,00
5	1	F 016 L72 004	Hose .	188,00
6	1	F 016 L72 005	Filter .	150,00
7	1	F 016 L73 591	Filter .	67,00
8	1	F 016 L72 007	Housing .	559,00
9	1	F 016 L72 008	Knob .	195,00
10	1	F 016 L72 009	Safety Cover .	360,00
11	1	F 016 L72 010	Hose Coupling .	131,00
12	4	F 016 L72 011	Screw .	34,00
13	7	F 016 L72 012	Screw .	41,00
101	1	F 016 F04 380	Adapter .	548,00
102	1	F 016 L72 014	O-Ring .	65,00
103	1	F 016 L72 015	Injector .	584,00
104	2	F 016 L72 016	O-Ring .	65,00
105	1	F 016 L72 017	Spring .	232,00
106	1	F 016 L72 018	Valve Insert .	515,00
107	1	F 016 L72 019	O-Ring .	30,00
108	1	F 016 L72 020	Pump head .	3.772,00
109	6	F 016 L72 021	Valve .	208,00
110	1	F 016 L72 022	O-Ring .	41,00
111	6	F 016 L72 023	O-Ring .	41,00

Item	Pc	Order no.	Description	LP IN INR
112	2	F 016 L72 024	Plug .	246,00
113	6	F 016 L72 025	Retaining clip .	112,00
114	4	F 016 L72 026	Screw .	41,00
115	1	F 016 L72 027	Plug .	164,00
116	1	F 016 L72 028	Nipple .	107,00
117	1	F 016 L72 029	Plug .	434,00
118	1	F 016 L72 030	O-Ring .	65,00
119	1	F 016 L72 031	Piston .	670,00
120	1	F 016 L72 032	Piston .	615,00
121	1	F 016 L72 033	O-Ring .	65,00
122	1	F 016 L72 030	O-Ring .	65,00
123	1	F 016 L72 034	Spacer Ring .	89,00
124	1	F 016 L72 035	O-Ring .	41,00
125	1	F 016 L72 014	O-Ring .	65,00
126	1	F 016 L72 036	Piston Guide .	745,00
127	1	F 016 L72 037	Wobble Plate .	182,00
128	1	F 016 L72 038	Spring .	167,00
129	1	F 016 L72 039	Wobble Plate .	103,00
130	1	F 016 L72 040	Pin .	55,00
131	1	F 016 L72 041	Insert .	702,00
132	1	F 016 L72 042	Plug .	41,00
133	1	F 016 L72 043	Nut .	41,00
134	1	F 016 L72 044	Plug .	676,00
135	1	F 016 L72 045	Pressure gauge .	737,00

Please observe: Repairing, modifying and testing of electro-tools are to be performed professionally.The safety regulations according to IEC, EN, VDE, AFNOR and other regulations of the individual countries are to be observed. Subject to change.
This price list supersedes all previous edition. Prices are subjected to change without any prior notice.

3 600 J10 0F0

Stand / Issue ~~23-02-08~~ 23-02-17 **Fig./Abb. 2**

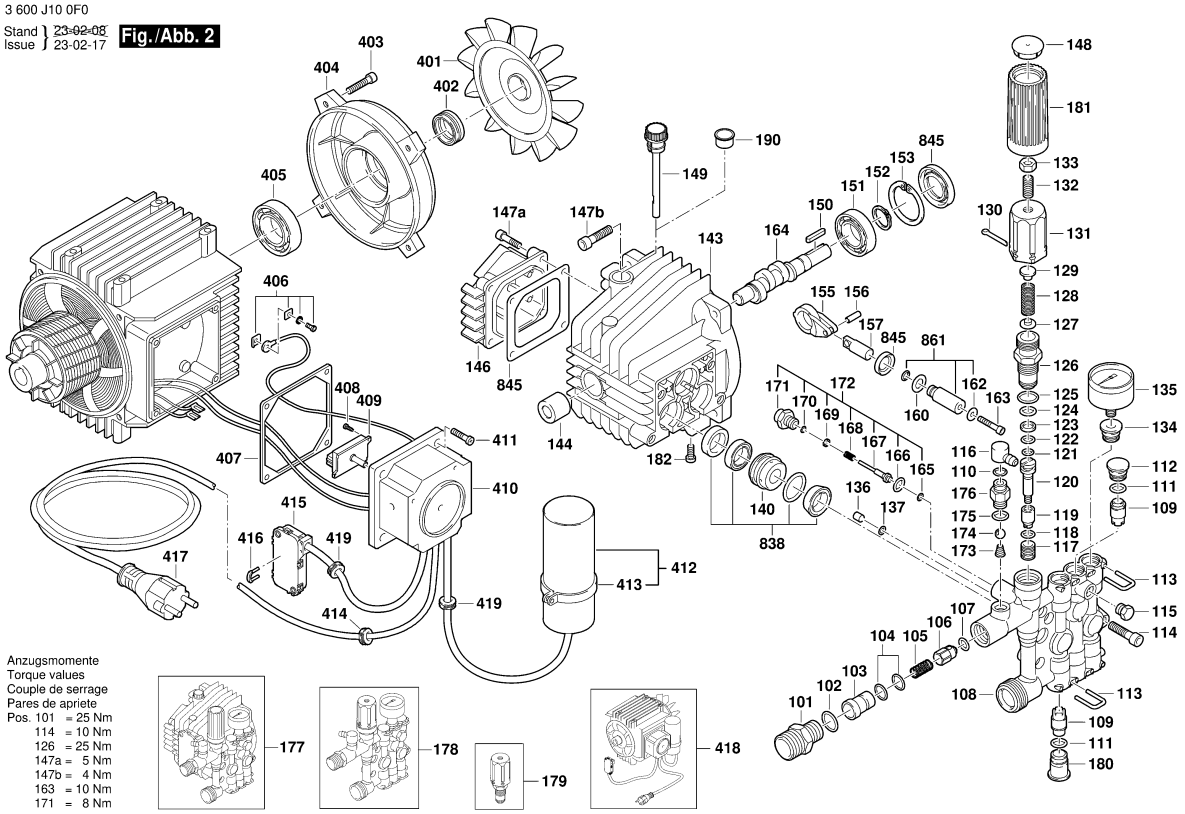

Model: 3 600 J10 0F0 = 220 | Date:

Item	Pc	Order no.	Description	LP IN INR
136	1	F 016 L72 046	Plug .	209,00
137	1	F 016 L72 047	O-Ring .	41,00
140	3	F 016 L72 048	Piston Guide .	238,00
143	1	F 016 L72 049	Pump unit .	2.127,00
144	1	F 016 L72 050	Bushing .	437,00
146	1	F 016 L72 051	Cover .	489,00
147	8	F 016 L72 052	Screw .	34,00
148	1	F 016 L72 053	Plug .	64,00
149	1	F 016 L72 054	Plug .	439,00
150	1	F 016 L72 055	Key .	88,00
151	1	F 016 L72 056	Ball Bearing .	403,00
152	1	F 016 L72 057	Retaining ring .	41,00
153	1	F 016 L72 058	Retaining ring .	115,00
155	3	F 016 L72 059	Connecting Rod .	251,00
156	3	F 016 L72 060	Pin .	64,00
157	3	F 016 L72 061	Pin .	508,00
160	1	F 016 F04 356	Washer .	68,00
162	3	F 016 L72 062	Plain Washer .	40,00
163	3	F 016 L72 063	Screw .	88,00
164	1	F 016 L72 064	Crankshaft .	1.000,00
165	1	F 016 L72 065	O-Ring .	41,00
166	1	F 016 L72 030	O-Ring .	65,00
167	1	F 016 L72 066	Pin .	377,00
168	1	F 016 L72 067	Spring .	115,00

Item	Pc	Order no.	Description	LP IN INR
169	1	F 016 L72 068	Plain Washer .	64,00
170	1	F 016 L72 069	O-Ring .	41,00
171	1	F 016 L72 070	Adapter .	290,00
172	1	F 016 L72 071	Adapter .	684,00
173	1	F 016 L72 072	Spring .	41,00
174	1	F 016 L72 073	Ball .	41,00
175	1	F 016 L72 074	O-Ring .	41,00
176	1	F 016 L72 075	Adapter .	495,00
177	1	F 016 F04 328	Pump .	14.225,00
178	1	F 016 F04 329	Pump head .	8.738,00
179	1	F 016 F04 330	Valve .	1.719,00
180	3	F 016 L72 076	Plug .	322,00
181	1	F 016 L72 077	Rotary Handle .	114,00
182	1	F 016 L72 078	Screw .	30,00
190	1	1 619 PB2 107	Plug .	49,00
401	1	F 016 L72 079	Fan .	204,00
402	1	F 016 L72 080	Seal .	55,00
403	4	F 016 L72 081	Screw .	34,00
404	1	F 016 L72 082	Cover .	598,00
405	1	F 016 L72 083	Ball Bearing .	590,00
406	1	F 016 L72 084	Clamp .	118,00
407	1	F 016 L72 085	Seal .	88,00
408	2	F 016 L72 086	Screw .	34,00
409	1	F 016 L72 087	Switch .	1.083,00

Please observe: Repairing, modifying and testing of electro-tools are to be performed professionally.The safety regulations according to IEC, EN, VDE, AFNOR and other regulations of the individual countries are to be observed. Subject to change.
This price list supersedes all previous edition. Prices are subjected to change without any prior notice.

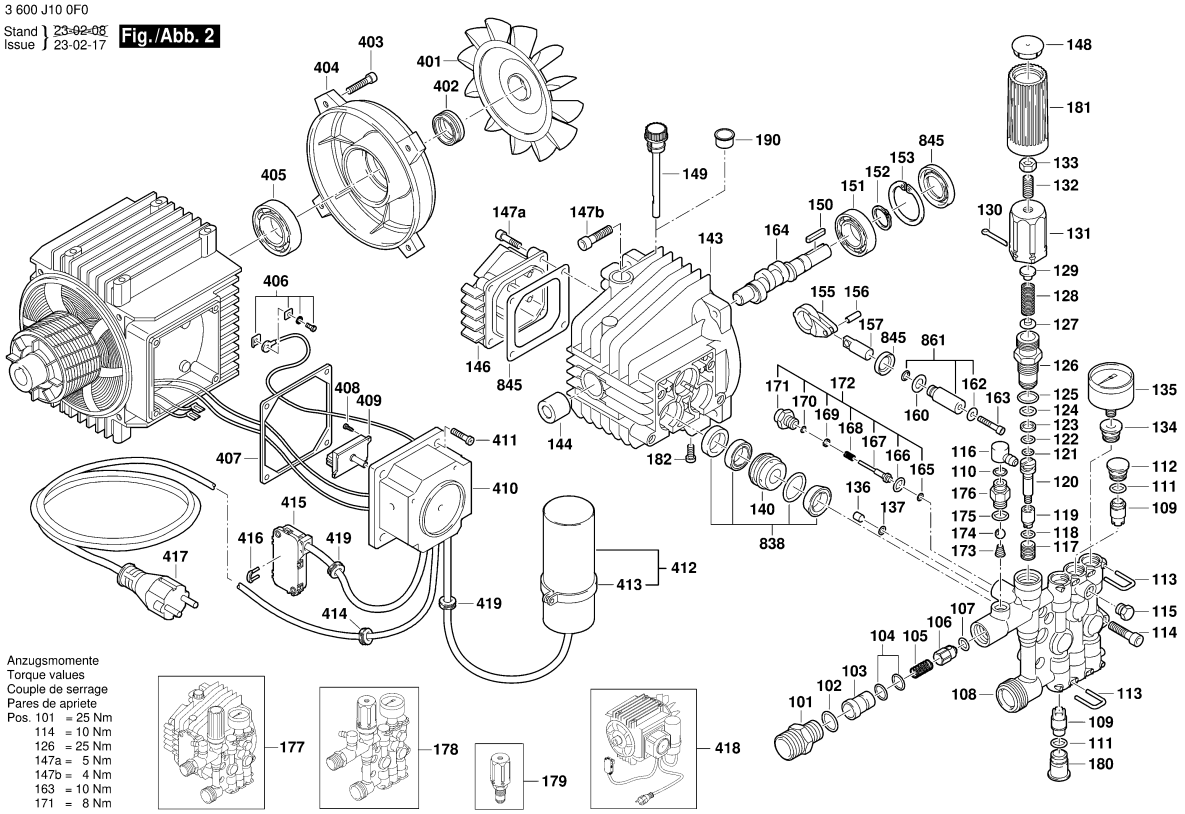

Model: 3 600 J10 0F0 = 220 | Date:

Item	Pc	Order no.	Description	LP IN INR	Item	Pc	Order no.	Description	LP IN INR
410	1	F 016 L72 088	Housing .	233,00					
411	4	F 016 L72 089	Screw .	34,00					
412	1	F 016 F06 013	Capacitor .						
413	1	F 016 F05 930	Clamp .						
414	1	F 016 L72 092	Grommet .	190,00					
415	1	F 016 L72 093	Electronic Module .	1.978,00					
416	1	F 016 L72 094	Clamp .	344,00					
417	1	F 016 F04 353	Power supply cord MAL	1.341,00					
418	1	F 016 F04 331	Motor .	12.396,00					
419	2	F 016 L72 096	Grommet .	190,00					
501	1	F 016 L72 097	Trigger .	1.819,00					
502	1	F 016 L72 098	Wide Angle Nozzle .	1.456,00					
503	1	F 016 L72 099	O-Ring .	65,00					
504	1	F 016 F04 523	Hose .	4.499,00					
505	1	F 016 L72 101	O-Ring .	65,00					
511	1	F 016 L73 068	Trigger .	1.766,00					
512	1	F 016 F05 939	Wide Angle Nozzle .						
512/815	1	1 619 PB2 119	O-Ring 9,5x1,5 .	30,00					
838	1	F 016 F04 320	Seal .	699,00					
845	1	F 016 F04 321	Seal .	461,00					
861	1	F 016 F04 322	Piston 3 Stück .	895,00					

Please observe: Repairing, modifying and testing of electro-tools are to be performed professionally.The safety regulations according to IEC, EN, VDE, AFNOR and other regulations of the individual countries are to be observed. Subject to change.
This price list supersedes all previous edition. Prices are subjected to change without any prior notice.

BOSCH Power Tools	High Pressure Cleaner	Model GHP 5-75 X 3 600 J10 8F0 | BO

3 600 J10 8F0
Stand } ~~19-07~~
Issue } 22-08-04

Fig./Abb. 1

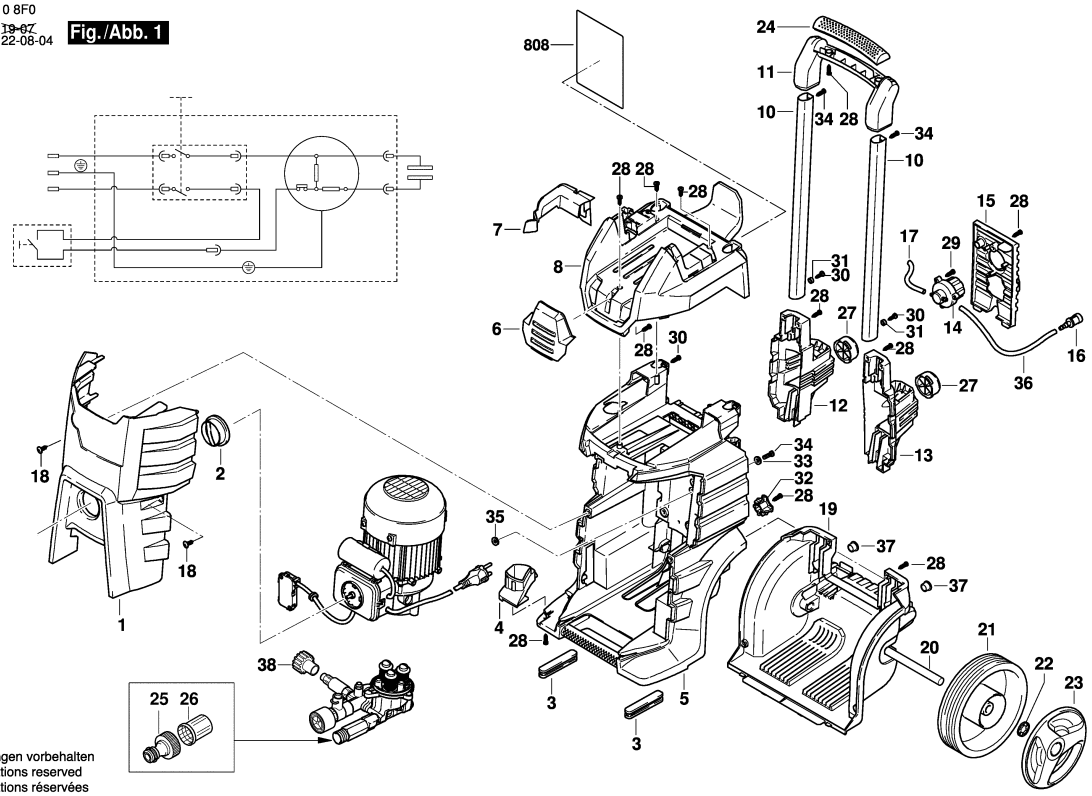

Änderungen vorbehalten
Modifications reserved
Modifications réservées
Salvo modificaciones

Model: 3 600 J10 8F0 = 230	Date:

Item	Pc	Order no.	Description	LP IN INR
1	1	F 016 L73 329	Housing .	1.500,00
2	1	F 016 L72 008	Knob .	195,00
3	2	F 016 L73 028	Rubber Base .	385,00
4	1	F 016 L73 029	Accessory Deposit .	306,00
5	1	F 016 L73 284	Housing .	2.772,00
6	1	F 016 L73 031	Cover .	298,00
7	1	F 016 L73 032	Hook .	355,00
8	1	F 016 L73 033	Housing part .	1.501,00
10	2	F 016 L73 356	Rod .	686,00
11	1	F 016 L73 036	Handle .	698,00
12	1	F 016 L73 037	Accessory Deposit .	581,00
13	1	F 016 L73 038	Accessory Deposit .	587,00
14	1	F 016 L73 039	Adjustment Knob .	385,00
15	1	F 016 L73 040	Cover Plate .	507,00
16	1	F 016 L73 041	Water filter .	315,00
17	1	F 016 L73 239	Suction Pipe .	120,00
18	2	F 016 L73 053	Screw .	81,00
19	1	F 016 L73 044	Housing .	2.079,00
20	1	F 016 L73 045	Wheel Shaft .	565,00
21	2	F 016 L73 046	Wheel .	2.079,00
22	2	F 016 L73 047	Plain Washer .	109,00
23	2	F 016 L73 048	Cover .	512,00
24	1	F 016 L72 122	Safety Cover .	411,00
25	1	F 016 L72 010	Hose Coupling .	131,00

Item	Pc	Order no.	Description	LP IN INR
26	1	F 016 L73 591	Filter .	67,00
27	2	F 016 L72 119	Rubber Base .	303,00
28	15	F 016 L72 012	Screw .	41,00
29	3	F 016 L72 187	Screw .	36,00
30	4	F 016 L73 337	Retaining Screw .	60,00
31	2	F 016 L73 051	Plain Washer .	148,00
32	1	F 016 L72 109	Grommet .	81,00
33	4	F 016 L72 120	Plain Washer .	100,00
34	6	F 016 L73 711	Screw .	30,00
35	4	F 016 L73 100	Vibration Damper .	119,00
36	1	F 016 L73 338	Suction Pipe .	157,00
37	1	F 016 L73 278	Plug .	81,00
38	1	F 016 L72 169	Rotary Knob .	636,00
39	4	F 016 L73 710	Screw .	36,00
101	1	F 016 L72 124	Plug .	290,00
102	1	F 016 L72 170	Pump head .	6.707,00
103	3	F 016 L72 126	Screw .	83,00
104	1	F 016 L72 035	O-Ring .	41,00
105	1	F 016 F04 381	Adapter .	770,00
106	5	F 016 L72 014	O-Ring .	65,00
107	1	F 016 L73 357	Adapter .	927,00
108	1	F 016 L72 074	O-Ring .	41,00
109	6	F 016 L72 129	Valve .	416,00
110	6	F 016 L72 130	Seal .	126,00

Please observe: Repairing, modifying and testing of electro-tools are to be performed professionally.The safety regulations according to IEC, EN, VDE, AFNOR and other regulations of the individual countries are to be observed. Subject to change.
This price list supersedes all previous edition. Prices are subjected to change without any prior notice.

3 600 J10 8F0
Stand ~~17-11~~
Issue 18-04-27

Fig./Abb. 2

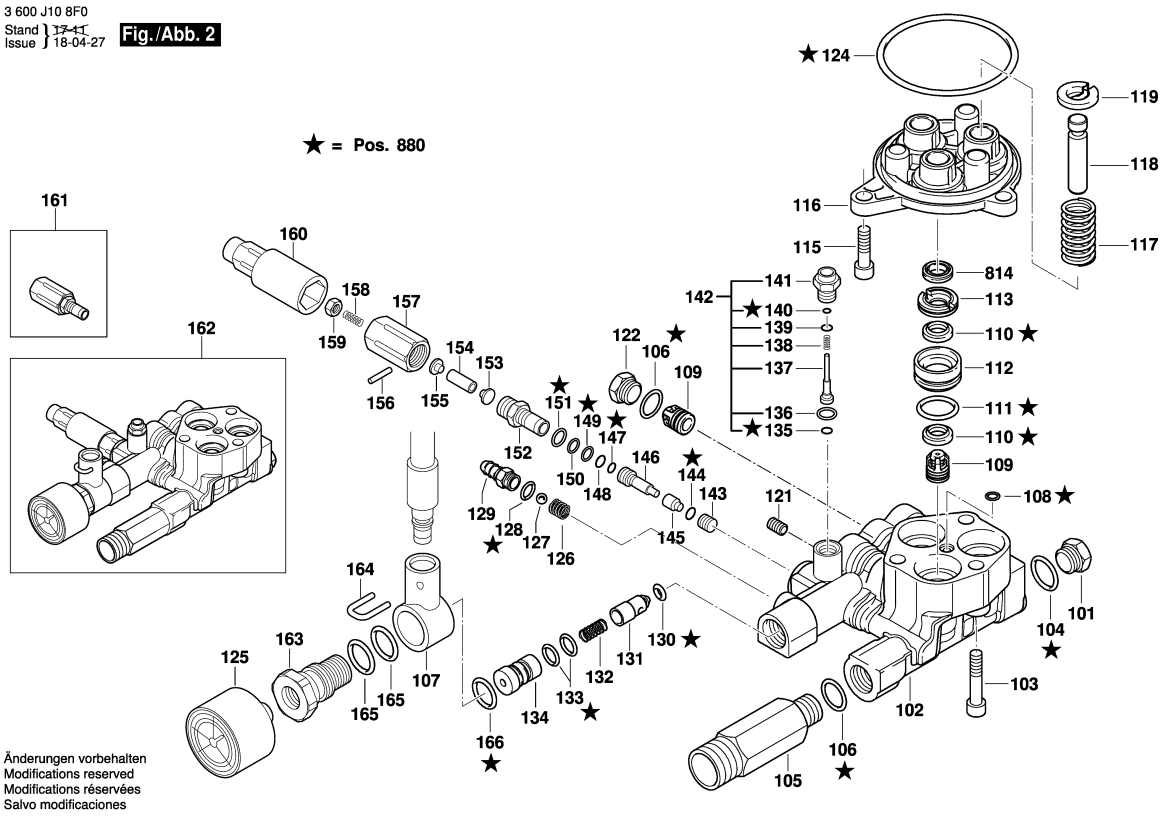

Model: 3 600 J10 8F0 = 230 | Date:

Item	Pc	Order no.	Description	LP IN INR
111	3	F 016 L72 131	O-Ring .	65,00
112	3	F 016 L72 132	Bushing .	547,00
113	3	F 016 L72 133	Bushing .	300,00
115	3	F 016 L72 134	Screw .	104,00
116	1	F 016 L72 135	Piston Guide .	801,00
117	3	F 016 L72 136	Spring .	161,00
118	1	F 016 F04 323	Piston 3 Stück .	784,00
119	3	F 016 L72 137	Wobble Plate .	107,00
121	1	F 016 L72 139	Screw .	344,00
122	1	F 016 L72 138	Plug .	311,00
124	1	F 016 L72 141	O-Ring .	89,00
125	1	F 016 L72 045	Pressure gauge .	737,00
126	1	F 016 L72 072	Spring .	41,00
127	1	F 016 L72 073	Ball .	41,00
128	1	F 016 L72 074	O-Ring .	41,00
129	1	F 016 L72 143	Nipple .	300,00
130	1	F 016 L72 019	O-Ring .	30,00
131	1	F 016 L72 018	Valve Insert .	515,00
132	1	F 016 L72 017	Spring .	232,00
133	2	F 016 L72 016	O-Ring .	65,00
134	1	F 016 L73 332	Injector .	518,00
135	1	F 016 L72 065	O-Ring .	41,00
136	1	F 016 L72 030	O-Ring .	65,00
137	1	F 016 L72 066	Pin .	377,00

Item	Pc	Order no.	Description	LP IN INR
138	1	F 016 L72 067	Spring .	115,00
139	1	F 016 L72 068	Plain Washer .	64,00
140	1	F 016 L72 069	O-Ring .	41,00
141	1	F 016 L72 070	Adapter .	290,00
142	1	F 016 L72 071	Adapter .	684,00
143	1	F 016 L72 174	Threaded Bushing .	708,00
144	1	F 016 L72 030	O-Ring .	65,00
145	1	F 016 L72 031	Piston .	670,00
146	1	F 016 L72 032	Piston .	615,00
147	1	F 016 L72 033	O-Ring .	65,00
148	1	F 016 L72 030	O-Ring .	65,00
149	1	F 016 L72 034	Spacer Ring .	89,00
150	1	F 016 L72 035	O-Ring .	41,00
151	1	F 016 L72 014	O-Ring .	65,00
152	1	F 016 L72 036	Piston Guide .	745,00
153	1	F 016 L72 037	Wobble Plate .	182,00
154	1	F 016 L72 038	Spring .	167,00
155	1	F 016 L72 039	Wobble Plate .	103,00
156	1	F 016 L72 040	Pin .	55,00
157	1	F 016 L72 041	Insert .	702,00
158	1	F 016 L72 042	Plug .	41,00
159	1	F 016 L72 043	Nut .	41,00
160	1	F 016 L73 290	Knob .	311,00
161	1	F 016 F04 355	Valve .	2.912,00

Please observe: Repairing, modifying and testing of electro-tools are to be performed professionally.The safety regulations according to IEC, EN, VDE, AFNOR and other regulations of the individual countries are to be observed. Subject to change.
This price list supersedes all previous edition. Prices are subjected to change without any prior notice.

3 600 J10 8F0
Stand } ~~15-02~~
Issue } 18-04-26

Fig./Abb. 3

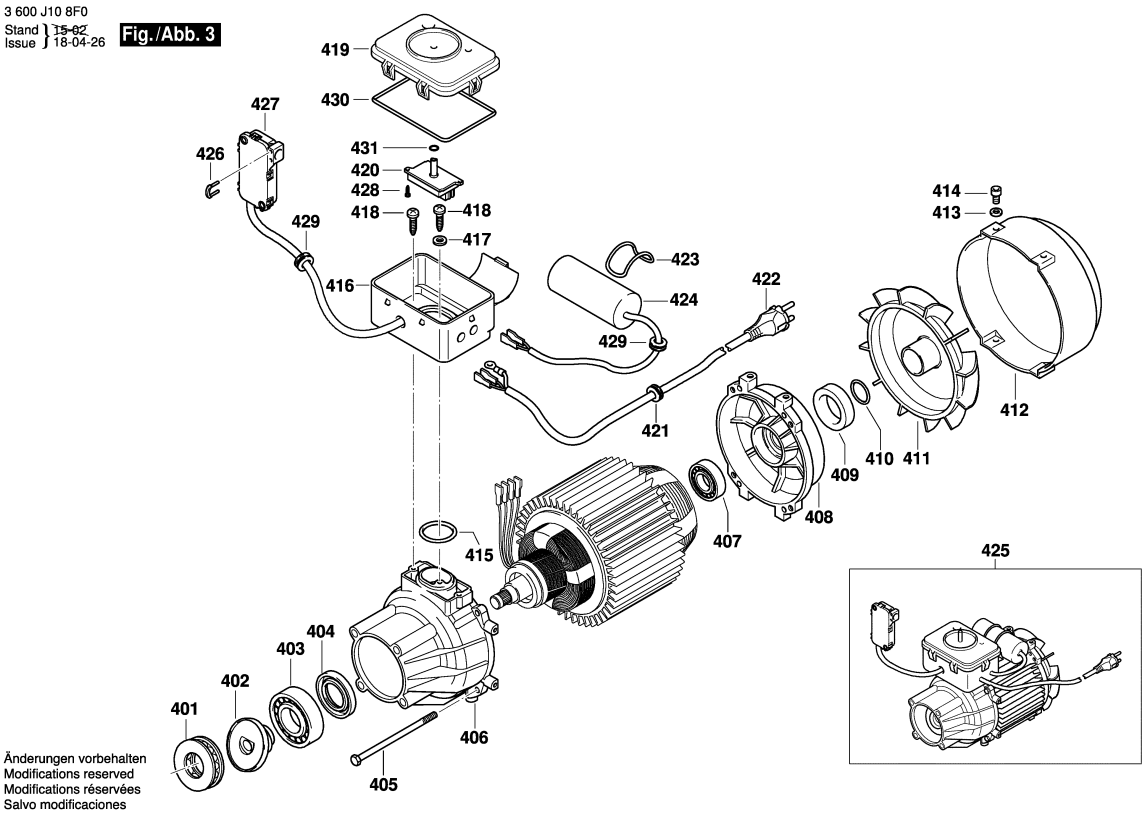

Model: 3 600 J10 8F0 = 230 | Date:

Item	Pc	Order no.	Description	LP IN INR
162	1	F 016 L73 333	Pump head .	9.040,00
163	1	F 016 L73 362	Plug .	761,00
164	1	F 016 L73 360	Clamp .	237,00
165	2	F 016 L72 219	O-Ring .	41,00
166	1	F 016 L73 709	O-Ring .	41,00
401	1	F 016 L72 144	Ball Bearing .	523,00
402	1	F 016 L72 176	Wobble Plate .	439,00
403	1	F 016 L72 146	Ball Bearing .	593,00
404	1	F 016 L73 063	Rotary shaft lip seal .	206,00
405	4	F 016 L72 177	Screw .	104,00
406	1	F 016 L72 149	Pump .	2.026,00
407	1	F 016 L72 150	Ball Bearing .	539,00
408	1	F 016 L72 151	Cover .	830,00
409	1	F 016 L72 152	Seal .	88,00
410	1	F 016 L72 153	O-Ring .	65,00
411	1	F 016 L72 154	Fan .	333,00
412	1	F 016 L73 065	Air Duct .	531,00
413	2	F 016 L72 156	Plain Washer .	59,00
414	2	F 016 L72 157	Screw .	36,00
415	1	F 016 L72 158	O-Ring .	59,00
416	1	F 016 L72 159	Housing .	490,00
417	1	F 016 L72 160	Plain Washer .	59,00
418	3	F 016 L72 161	Screw .	36,00
419	1	F 016 L73 339	Cover .	305,00

Item	Pc	Order no.	Description	LP IN INR
420	1	F 016 L72 087	Switch .	1.083,00
421	1	F 016 L72 092	Grommet .	190,00
422	1	F 016 L73 344	Power supply cord .	2.079,00
423	1	F 016 L72 163	O-Ring .	81,00
424	1	F 016 F05 927	Condenser .	
425	1	F 016 L73 365	Motor .	20.006,00
426	1	F 016 L72 094	Clamp .	344,00
427	1	F 016 L72 093	Electronic Module .	1.978,00
428	2	F 016 L72 086	Screw .	34,00
429	2	F 016 L72 096	Grommet .	190,00
430	1	F 016 L72 260	O-Ring .	206,00
431	1	F 016 L73 343	O-Ring .	47,00
501	1	F 016 L73 367	Cover .	198,00
502	1	F 016 L73 368	Ring .	44,00
503	1	F 016 L73 369	Adapter .	927,00
504	2	F 016 L73 370	Clamp .	234,00
505	1	F 016 L73 371	Cover .	469,00
506	1	F 016 L73 346	Adapter .	828,00
507	1	F 016 L73 373	Screw .	36,00
508	1	F 016 L73 374	Cover .	729,00
509	2	F 016 L72 101	O-Ring .	65,00
510	1	F 016 L73 375	Adapter .	1.624,00
511	1	F 016 L72 286	Ring .	40,00
512	1	F 016 L73 376	High-Pressure Hose .	3.536,00

Please observe: Repairing, modifying and testing of electro-tools are to be performed professionally.The safety regulations according to IEC, EN, VDE, AFNOR and other regulations of the individual countries are to be observed. Subject to change.
This price list supersedes all previous edition. Prices are subjected to change without any prior notice.

3 600 J10 8F0
Stand } ~~17-11~~
Issue } 17-12-07

Fig./Abb. 4

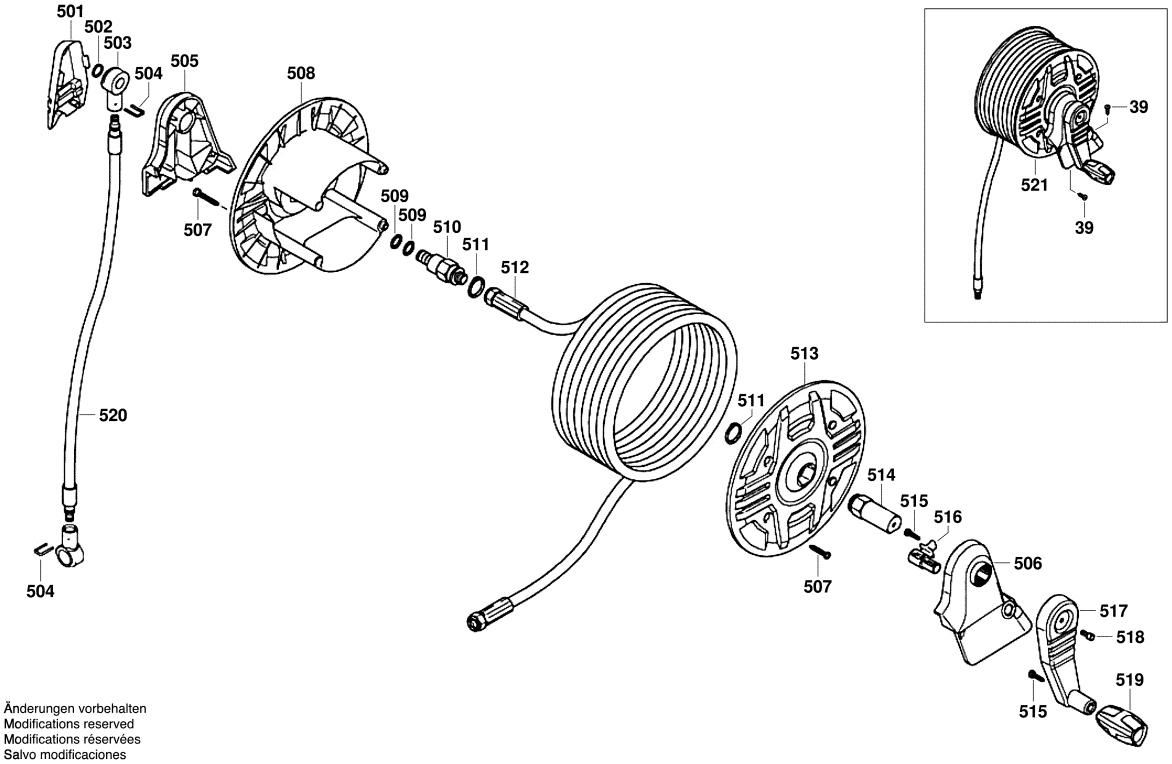

Änderungen vorbehalten
Modifications reserved
Modifications réservées
Salvo modificaciones

Model: 3 600 J10 8F0 = 230 | Date:

Item	Pc	Order no.	Description	LP IN INR	Item	Pc	Order no.	Description	LP IN INR
513	1	F 016 L73 377	Cover .	644,00					
514	1	F 016 L73 378	Hub .	942,00					
515	1	F 016 L73 053	Screw .	81,00					
516	1	F 016 L72 282	Hook .	238,00					
517	1	F 016 L73 379	Lever .	471,00					
518	1	F 016 L72 203	Screw .	40,00					
519	1	F 016 L73 380	Knob .	148,00					
520	1	F 016 L73 381	High-Pressure Hose .	1.481,00					
521	1	F 016 L73 382	Hose Reel Carrier .	11.359,00					
601	1	F 016 L73 068	Trigger .	1.766,00					
601/1	1	1 619 PA9 742	Trigger .	483,00					
601/2	1	1 619 PA9 743	Spring .	254,00					
601/3	1	1 619 PA9 744	Lock .	336,00					
602	1	F 016 L73 327	Jet Pipe .	2.198,00					
602/815	1	1 619 PB2 119	O-Ring 9,5x1,5 .	30,00					
603	1	F 016 L73 384	Roto Jet Fan Lance .	3.571,00					
603/815	1	1 619 PB2 119	O-Ring 9,5x1,5 .	30,00					
611	1	F 016 L73 351	Filter .	1.405,00					
612	1	F 016 L73 352	Filter .	1.202,00					
808	1	F 016 F05 917	Nameplate .						
814	1	F 016 F04 324	Seal .	504,00					
880	1	F 016 L73 387	Wear and Tear Part Set .	596,00					

Please observe: Repairing, modifying and testing of electro-tools are to be performed professionally.The safety regulations according to IEC, EN, VDE, AFNOR and other regulations of the individual countries are to be observed. Subject to change.
This price list supersedes all previous edition. Prices are subjected to change without any prior notice.

3 600 J10 8F0
Stand } ~~17-04~~
Issue } 18-04-27

Fig./Abb. 5

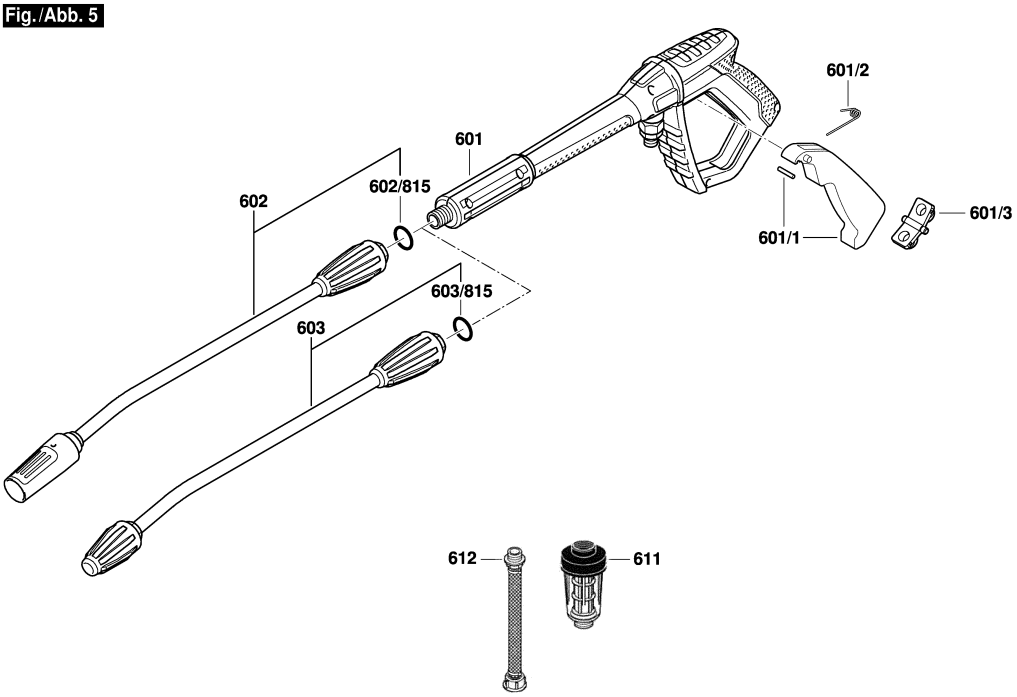

Änderungen vorbehalten
Modifications reserved
Modifications réservées
Salvo modificaciones

Model: 3 600 J10 8F0 = 230 | Date:

Item	Pc	Order no.	Description	LP IN INR	Item	Pc	Order no.	Description	LP IN INR

Please observe: Repairing, modifying and testing of electro-tools are to be performed professionally.The safety regulations according to IEC, EN, VDE, AFNOR and other regulations of the individual countries are to be observed. Subject to change.
This price list supersedes all previous edition. Prices are subjected to change without any prior notice.

BOSCH Power Tools	High Pressure Cleaner	Model EasyAquatak 100 3 600 HA7 EF0 | BO

3 600 HA7 E40
Stand } 19-04
Issue } 19-07-22

Fig. /Abb. 1

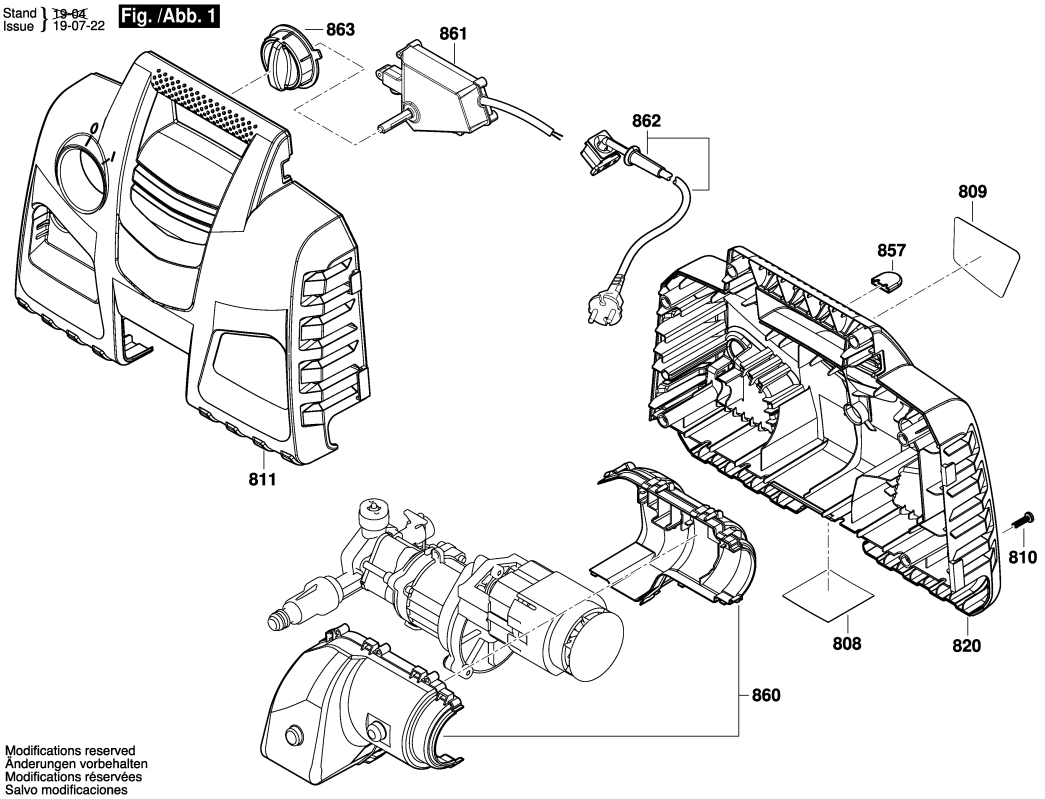

Modifications reserved
Änderungen vorbehalten
Modifications réservées
Salvo modificaciones

Model: 3 600 HA7 EF0 = 230 | Date:

Item	Pc	Order no.	Description	LP IN INR
801	1	F 016 F05 124	Motor .	2.160,00
808	1	F 016 F05 074	Nameplate .	
809	1	F 016 F05 125	Warning Label .	
810	7	F 016 F04 810	Torx SH cap screw .	44,00
811	1	F 016 F05 126	front cover .	784,00
820	1	F 016 F05 127	Cover .	638,00
843	1	F 016 F05 402	O-Ring .	47,00
850	1	F 016 F04 459	O-Ring .	244,00
851	1	F 016 F04 801	Pump head .	495,00
852	1	F 016 F05 171	Piston Guide .	393,00
853	1	F 016 F04 798	Pump unit .	411,00
854	1	F 016 F04 803	Thrust Bearing .	169,00
855	1	F 016 F05 129	Gear Box .	938,00
856	1	F 016 F04 809	Non-Return Valve .	42,00
857	1	F 016 F04 681	Clip .	39,00
860	1	F 016 F05 130	Motor cover .	257,00
861	1	F 016 F05 257	Switch Box .	638,00
862	1	F 016 F05 174	Power supply cord .	808,00
863	1	F 016 F04 805	Switch Actuator .	176,00
870	1	F 016 F04 458	Seal Kit 2 x (5.3 x 1.6), 2 x	239,00
871	1	F 016 F05 131	Trigger .	862,00
879	1	F 016 F05 036	Bottle 450ml .	492,00
880	1	F 016 F05 132	High pressure foam nozzle	337,00
881	1	F 016 F04 795	Retaining clip .	34,00

Item	Pc	Order no.	Description	LP IN INR
882	1	F 016 F05 136	Water filter .	98,00
883	1	F 016 F04 583	High-Pressure Hose 3 m .	857,00
884	1	F 016 F05 492	Hose Coupling .	96,00
888	1	F 016 F05 661	Water filter .	98,00

Please observe: Repairing, modifying and testing of electro-tools are to be performed professionally.The safety regulations according to IEC, EN, VDE, AFNOR and other regulations of the individual countries are to be observed. Subject to change.
This price list supersedes all previous edition. Prices are subjected to change without any prior notice.

3 600 HA7 E40
Stand } ~~19-07~~
Issue } 21-10-21

Fig. /Abb. 2

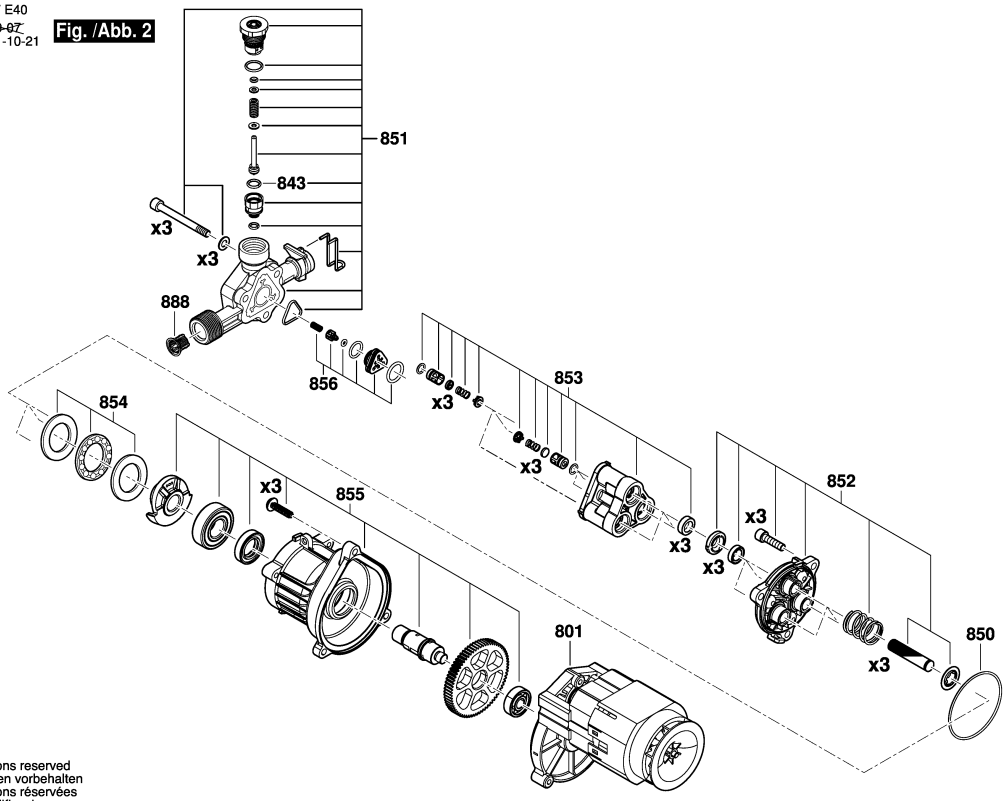

Modifications reserved
Änderungen vorbehalten
Modifications réservées
Salvo modificaciones

2 / 3

Model: 3 600 HA7 EF0 = 230	Date:

Item	Pc	Order no.	Description	LP IN INR	Item	Pc	Order no.	Description	LP IN INR

Please observe: Repairing, modifying and testing of electro-tools are to be performed professionally.The safety regulations according to IEC, EN, VDE, AFNOR and other regulations of the individual countries are to be observed. Subject to change.
This price list supersedes all previous edition. Prices are subjected to change without any prior notice.

3 600 HA7 E40
Stand } ~~19-04~~
Issue } 19-07-22 **Fig. /Abb. 3**

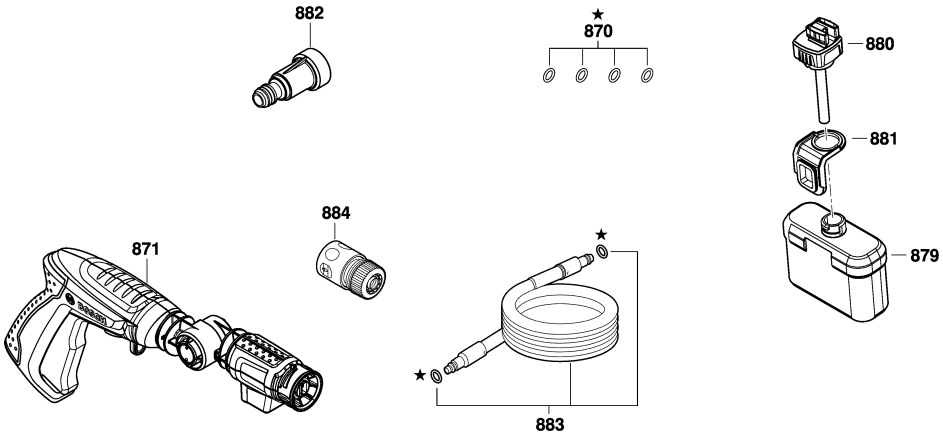

Modifications reserved
Änderungen vorbehalten
Modifications réservées
Salvo modificaciones

Model: 3 600 HA7 EF0 = 230	Date:

Item	Pc	Order no.	Description	LP IN INR	Item	Pc	Order no.	Description	LP IN INR

Please observe: Repairing, modifying and testing of electro-tools are to be performed professionally.The safety regulations according to IEC, EN, VDE, AFNOR and other regulations of the individual countries are to be observed. Subject to change.
This price list supersedes all previous edition. Prices are subjected to change without any prior notice.

3 600 HA7 A40
Stand / Issue 19-04-08 **Fig./Abb. 1**

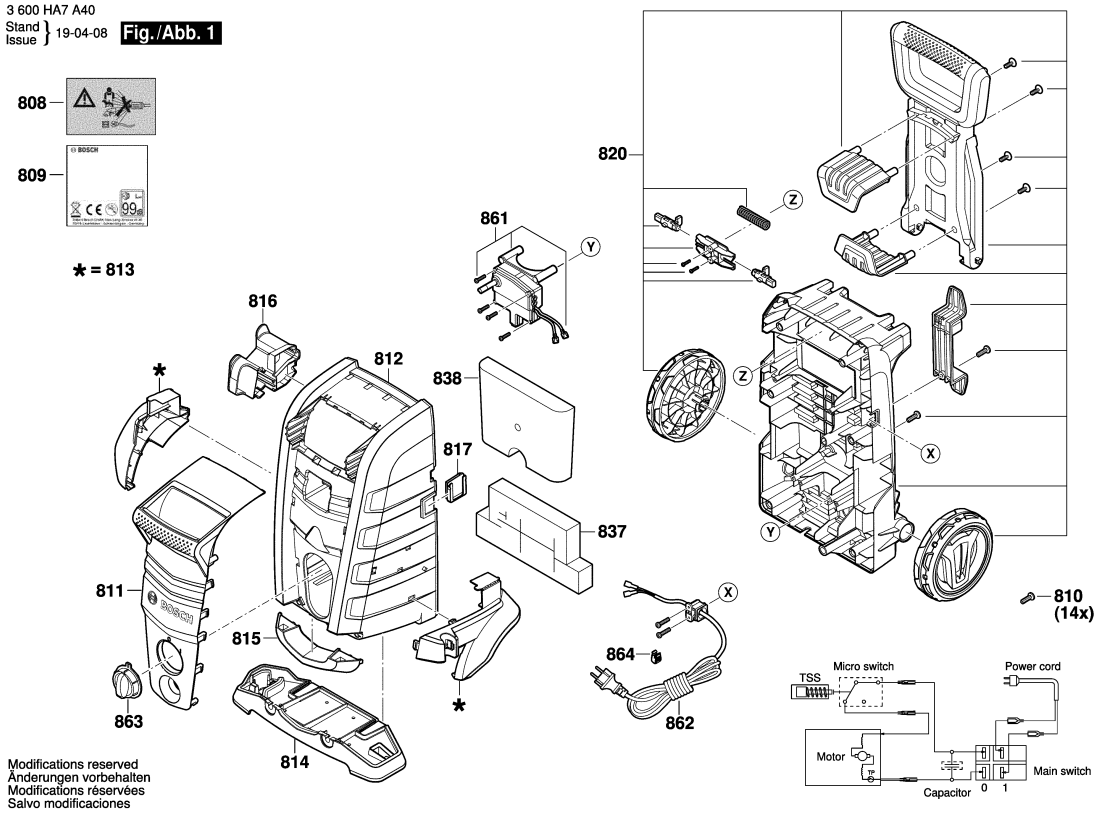

Modifications reserved
Änderungen vorbehalten
Modifications réservées
Salvo modificaciones

Model: 3 600 HA7 AF0 = 230 | Date:

Item	Pc	Order no.	Description	LP IN INR
842	1	F 016 F05 637	O-Ring Ø 63 x 2,65 mm .	40,00
801	1	F 016 F05 016	Motor .	3.064,00
808	1	F 016 F05 085	Nameplate .	
809	1	F 016 F05 583	Warning Label .	
810	14	F 016 F04 810	Torx SH cap screw .	44,00
811	1	F 016 F05 258	front cover .	658,00
812	1	F 016 F05 003	front cover .	1.108,00
813	1	F 016 F05 004	front cover .	1.108,00
814	1	F 016 F05 005	front cover .	1.108,00
815	1	F 016 F05 006	front cover .	128,00
816	1	F 016 F04 452	front cover .	166,00
817	1	F 016 F05 007	Clip .	37,00
820	1	F 016 F05 262	Cover .	1.108,00
837	1	F 016 F05 018	Foam Panel .	343,00
838	1	F 016 F05 019	Foam Panel .	343,00
843	1	F 016 F05 402	O-Ring .	47,00
850	1	F 016 F04 459	O-Ring .	244,00
851	1	F 016 F05 012	Pump head .	677,00
852	1	F 016 F04 441	Piston Guide .	107,00
853	1	F 016 F05 011	Pump unit .	541,00
854	1	F 016 F04 803	Thrust Bearing .	169,00
855	1	F 016 F05 010	Gear Box .	1.076,00
856	1	F 016 F04 460	Non-Return Valve .	242,00
857	1	F 016 F04 681	Clip .	39,00

Item	Pc	Order no.	Description	LP IN INR
860	1	F 016 F05 008	Motor cover .	318,00
861	1	F 016 F04 439	Switch Box .	1.945,00
862	1	F 016 F04 486	Power supply cord IND .	672,00
863	1	F 016 F04 613	Switch Actuator .	176,00
864	1	F 016 F05 432	Clip .	55,00
870	1	F 016 F04 458	Seal Kit 2 x (5.3 x 1.6), 2 x	239,00
871	1	F 016 F05 280	Trigger .	1.044,00
872	1	F 016 F05 135	Lance .	344,00
876	1	F 016 F05 573	3-in-1-nozzle RED	
879	1	F 016 F05 036	Bottle 450ml .	492,00
880	1	F 016 F05 020	High pressure foam nozzle	356,00
881	1	F 016 F04 795	Retaining clip .	34,00
883	1	F 016 F05 013	High-Pressure Hose 5 m .	672,00
884	1	F 016 F05 492	Hose Coupling .	96,00
888	1	F 016 F05 661	Water filter .	98,00

Please observe: Repairing, modifying and testing of electro-tools are to be performed professionally.The safety regulations according to IEC, EN, VDE, AFNOR and other regulations of the individual countries are to be observed. Subject to change.
This price list supersedes all previous edition. Prices are subjected to change without any prior notice.

3 600 HA7 A40
Stand ~~20-10~~
Issue 21-10-21

Fig. /Abb. 2

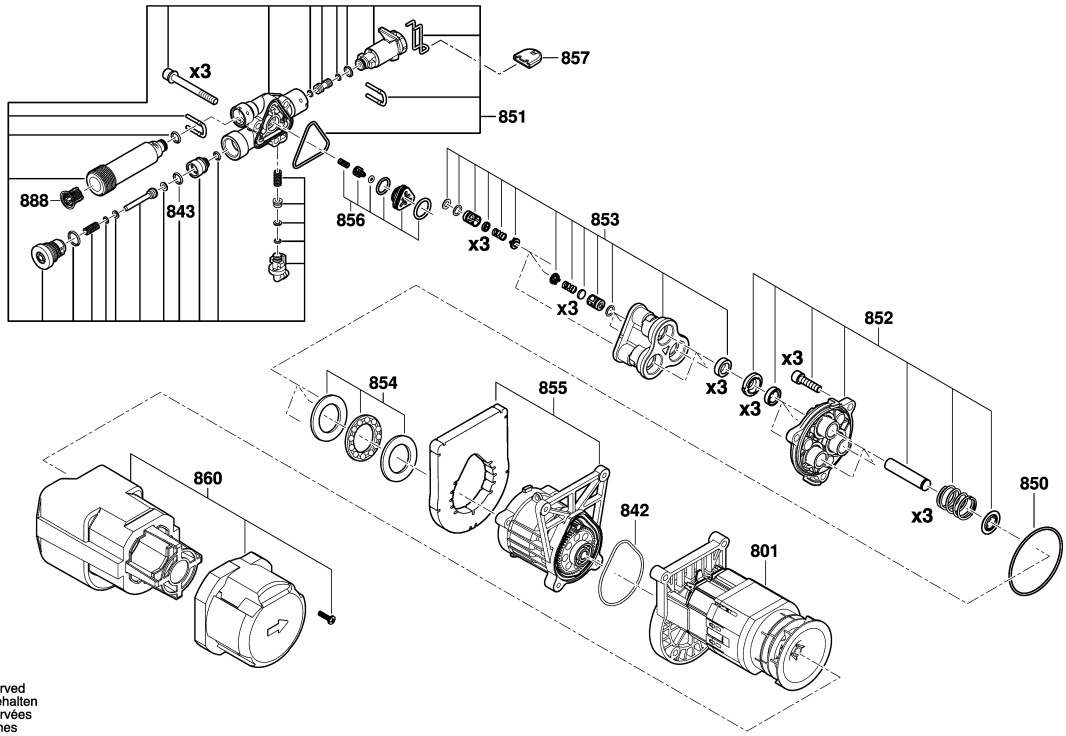

Modifications reserved
Änderungen vorbehalten
Modifications réservées
Salvo modificaciones

Model: 3 600 HA7 AF0 = 230 | Date:

Item	Pc	Order no.	Description	LP IN INR	Item	Pc	Order no.	Description	LP IN INR

Please observe: Repairing, modifying and testing of electro-tools are to be performed professionally.The safety regulations according to IEC, EN, VDE, AFNOR and other regulations of the individual countries are to be observed. Subject to change.
This price list supersedes all previous edition. Prices are subjected to change without any prior notice.

3 600 HA7 A40
Stand } ~~19-08~~
Issue } 20-02-27

Fig. /Abb. 3

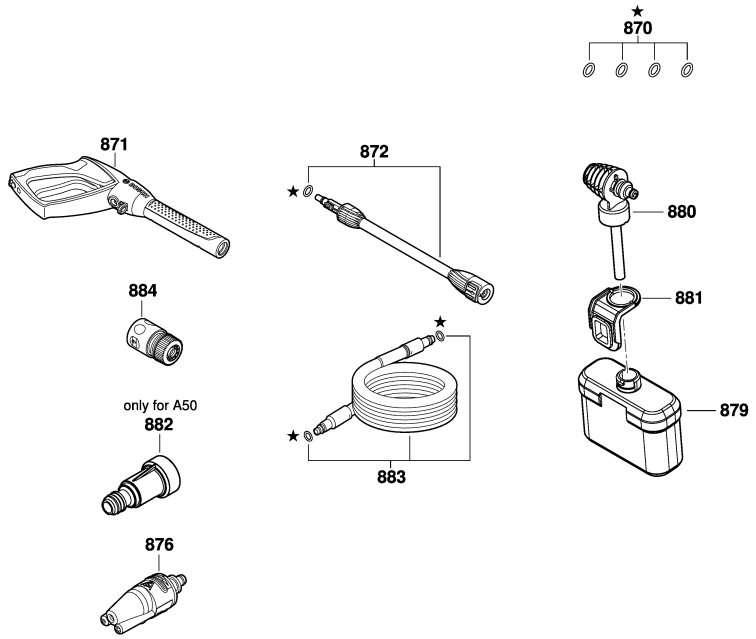

Modifications reserved
Änderungen vorbehalten
Modifications réservées
Salvo modificaciones

Model: 3 600 HA7 AF0 = 230	Date:

Item	Pc	Order no.	Description	LP IN INR	Item	Pc	Order no.	Description	LP IN INR

Please observe: Repairing, modifying and testing of electro-tools are to be performed professionally.The safety regulations according to IEC, EN, VDE, AFNOR and other regulations of the individual countries are to be observed. Subject to change.
This price list supersedes all previous edition. Prices are subjected to change without any prior notice.

3 600 HA7 B40
Stand / Issue } 19-04-08 **Fig./Abb. 1**

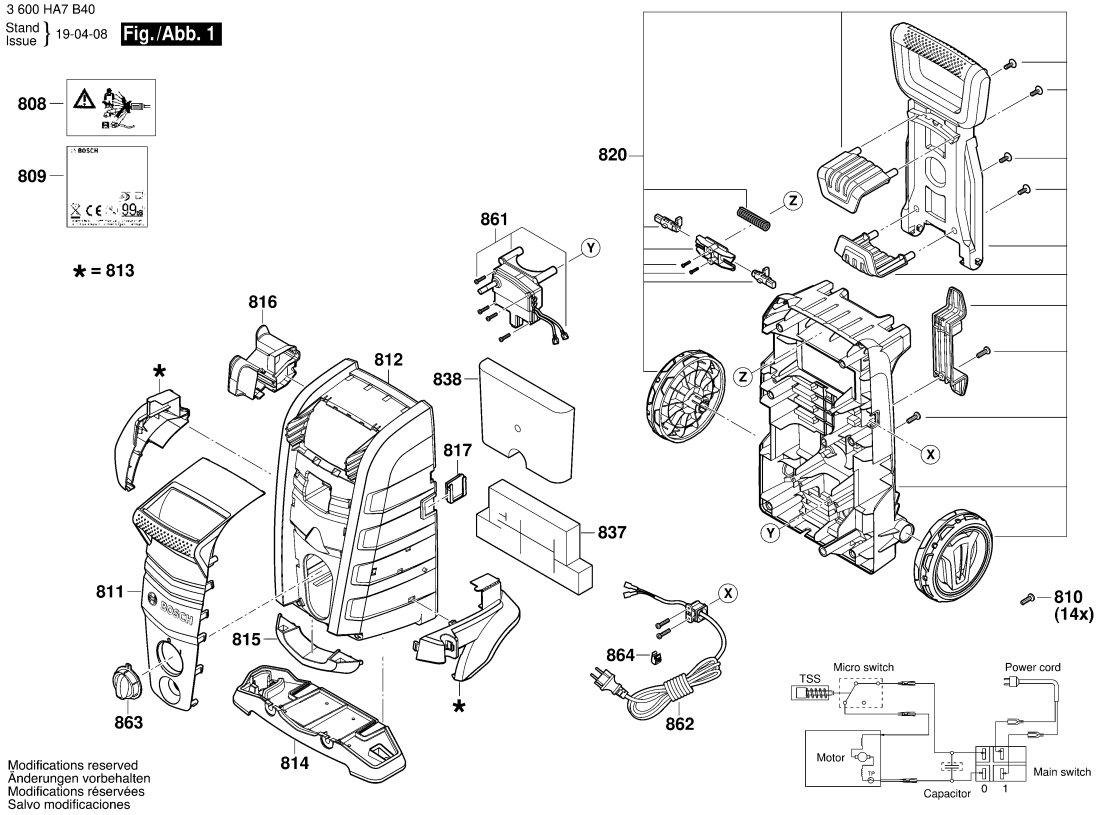

Modifications reserved
Änderungen vorbehalten
Modifications réservées
Salvo modificaciones

Model: 3 600 HA7 BK0 = 230 | Date:

Item	Pc	Order no.	Description	LP IN INR
801	1	F 016 F05 027	Motor .	4.402,00
808	1	F 016 F05 090	Nameplate .	
809	1	F 016 F05 583	Warning Label .	
810	14	F 016 F04 810	Torx SH cap screw .	44,00
811	1	F 016 F05 022	front cover .	524,00
812	1	F 016 F05 003	front cover .	1.108,00
813	1	F 016 F05 004	front cover .	1.108,00
814	1	F 016 F05 005	front cover .	1.108,00
815	1	F 016 F05 006	front cover .	128,00
816	1	F 016 F04 452	front cover .	166,00
817	1	F 016 F05 007	Clip .	37,00
820	1	F 016 F05 262	Cover .	1.108,00
837	1	F 016 F05 018	Foam Panel .	343,00
838	1	F 016 F05 019	Foam Panel .	343,00
842	1	F 016 F05 637	O-Ring Ø 63 x 2,65 mm .	40,00
843	1	F 016 F05 402	O-Ring .	47,00
850	1	F 016 F04 459	O-Ring .	244,00
851	1	F 016 F05 024	Pump head .	738,00
852	1	F 016 F04 441	Piston Guide .	107,00
853	1	F 016 F04 440	Pump unit .	568,00
854	1	F 016 F05 023	Thrust Bearing .	492,00
855	1	F 016 F04 447	Gear Box .	1.393,00
856	1	F 016 F04 460	Non-Return Valve .	242,00
857	1	F 016 F04 681	Clip .	39,00

Item	Pc	Order no.	Description	LP IN INR
860	1	F 016 F04 614	Motor cover .	204,00
861	1	F 016 F04 439	Switch Box .	1.945,00
862	1	F 016 F04 484	Power supply cord EU .	703,00
863	1	F 016 F04 613	Switch Actuator .	176,00
864	1	F 016 F05 432	Clip .	55,00
870	1	F 016 F04 458	Seal Kit 2 x (5.3 x 1.6), 2 x	239,00
871	1	F 016 F05 280	Trigger .	1.044,00
872	1	F 016 F05 135	Lance .	344,00
876	1	F 016 F05 573	3-in-1-nozzle RED	
879	1	F 016 F05 036	Bottle 450ml .	492,00
880	1	F 016 F05 020	High pressure foam nozzle	356,00
881	1	F 016 F04 795	Retaining clip .	34,00
883	1	F 016 F05 025	High-Pressure Hose 6m	784,00
884	1	F 016 F05 492	Hose Coupling .	96,00
888	1	F 016 F05 661	Water filter .	98,00

Please observe: Repairing, modifying and testing of electro-tools are to be performed professionally.The safety regulations according to IEC, EN, VDE, AFNOR and other regulations of the individual countries are to be observed. Subject to change.
This price list supersedes all previous edition. Prices are subjected to change without any prior notice.

3 600 HA7 B40
Stand ~~20-10~~
Issue 21-10-21

Fig. /Abb. 2

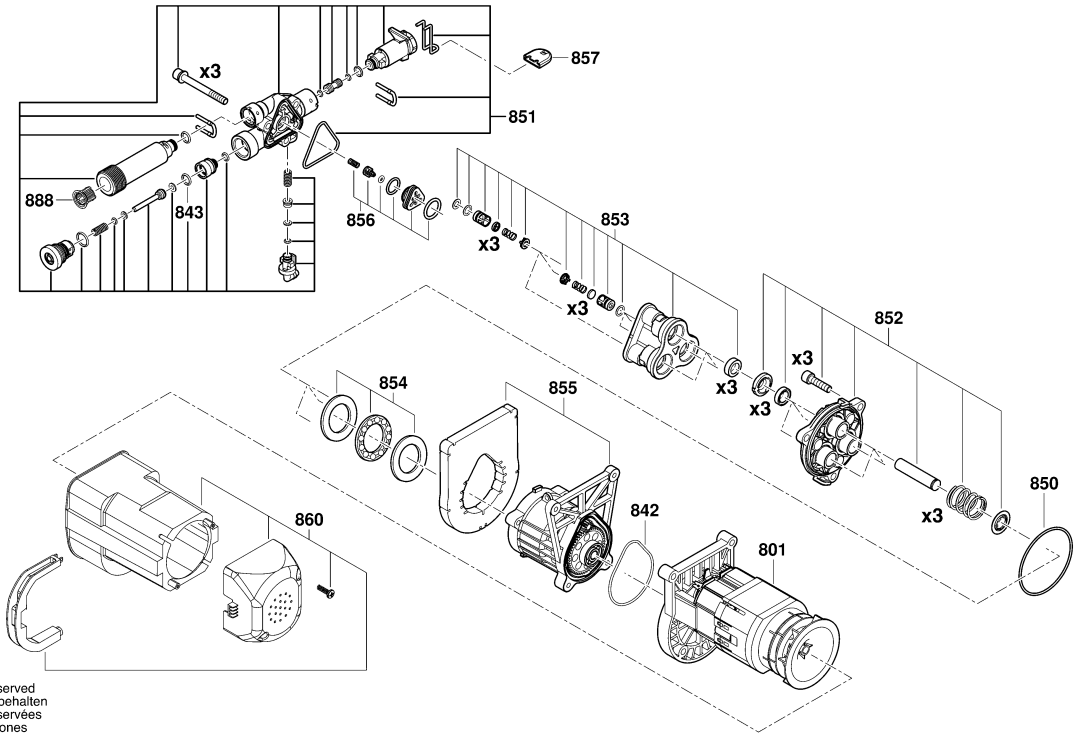

Modifications reserved
Änderungen vorbehalten
Modifications réservées
Salvo modificaciones

Model: 3 600 HA7 BK0 = 230	Date:

Item	Pc	Order no.	Description	LP IN INR	Item	Pc	Order no.	Description	LP IN INR

Please observe: Repairing, modifying and testing of electro-tools are to be performed professionally.The safety regulations according to IEC, EN, VDE, AFNOR and other regulations of the individual countries are to be observed. Subject to change.
This price list supersedes all previous edition. Prices are subjected to change without any prior notice.

3 600 HA7 B40
Stand } ~~19-08~~
Issue } 23-07-03

Fig. /Abb. 3

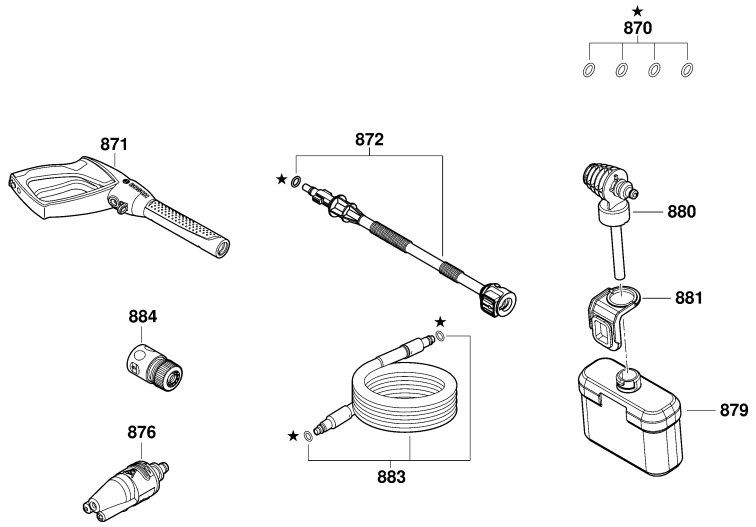

Modifications reserved
Änderungen vorbehalten
Modifications réservées
Salvo modificaciones

Model: 3 600 HA7 BK0 = 230 | Date:

Item	Pc	Order no.	Description	LP IN INR	Item	Pc	Order no.	Description	LP IN INR

Please observe: Repairing, modifying and testing of electro-tools are to be performed professionally.The safety regulations according to IEC, EN, VDE, AFNOR and other regulations of the individual countries are to be observed. Subject to change.
This price list supersedes all previous edition. Prices are subjected to change without any prior notice.

3 600 HA7 C40
Stand / Issue } 19-04-08 **Fig./Abb. 1**

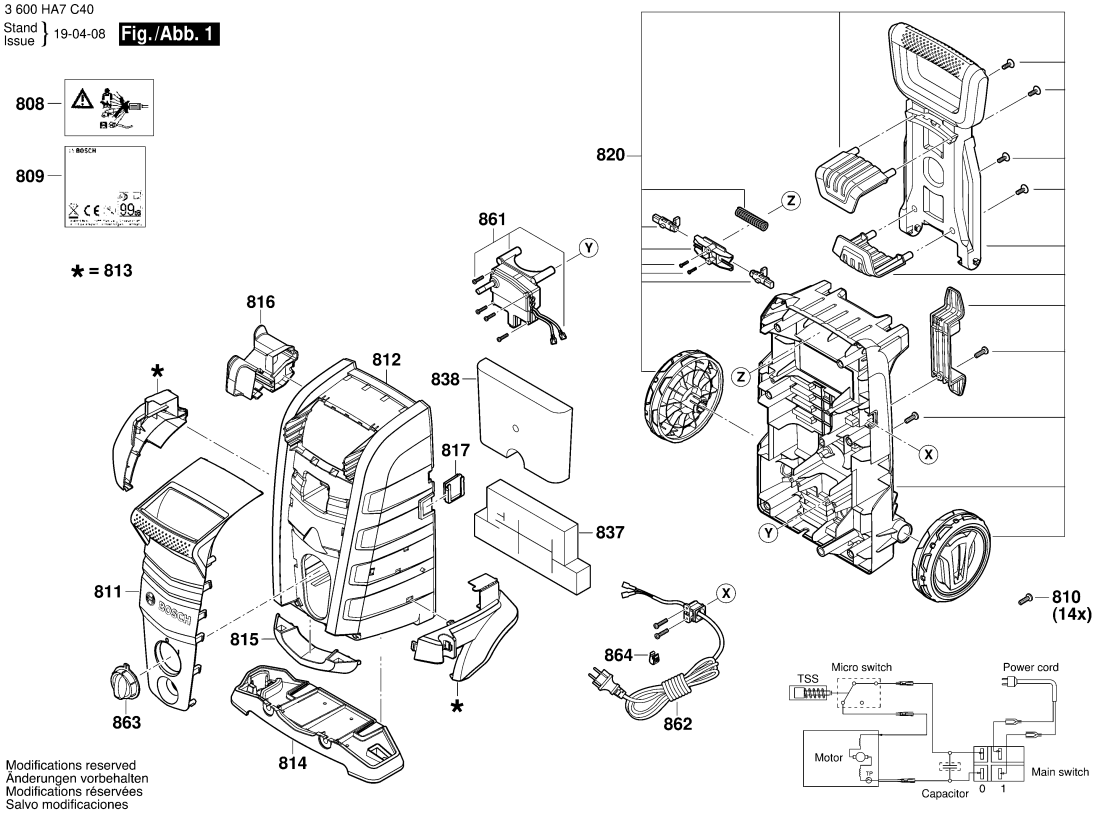

Model: 3 600 HA7 CF0 = 230 | Date:

Item	Pc	Order no.	Description	LP IN INR
801	1	F 016 F05 034	Motor .	5.005,00
808	1	F 016 F05 093	Nameplate .	
809	1	F 016 F05 583	Warning Label .	
810	14	F 016 F04 810	Torx SH cap screw .	44,00
811	1	F 016 F05 260	front cover .	632,00
812	1	F 016 F05 003	front cover .	1.108,00
813	1	F 016 F05 004	front cover .	1.108,00
814	1	F 016 F05 005	front cover .	1.108,00
815	1	F 016 F05 006	front cover .	128,00
816	1	F 016 F04 452	front cover .	166,00
817	1	F 016 F05 007	Clip .	37,00
820	1	F 016 F05 262	Cover .	1.108,00
837	1	F 016 F05 018	Foam Panel .	343,00
838	1	F 016 F05 019	Foam Panel .	343,00
842	1	F 016 F05 637	O-Ring Ø 63 x 2,65 mm .	40,00
843	1	F 016 F05 402	O-Ring .	47,00
850	1	F 016 F04 459	O-Ring .	244,00
851	1	F 016 F05 024	Pump head .	738,00
852	1	F 016 F04 441	Piston Guide .	107,00
853	1	F 016 F04 440	Pump unit .	568,00
854	1	F 016 F05 023	Thrust Bearing .	492,00
855	1	F 016 F05 031	Gear Box .	1.043,00
856	1	F 016 F04 460	Non-Return Valve .	242,00
857	1	F 016 F04 681	Clip .	39,00

Item	Pc	Order no.	Description	LP IN INR
860	1	F 016 F04 614	Motor cover .	204,00
861	1	F 016 F04 439	Switch Box .	1.945,00
862	1	F 016 F04 486	Power supply cord IND .	672,00
863	1	F 016 F04 613	Switch Actuator .	176,00
864	1	F 016 F05 432	Clip .	55,00
870	1	F 016 F04 458	Seal Kit 2 x (5.3 x 1.6), 2 x	239,00
871	1	F 016 F05 280	Trigger .	1.044,00
872	1	F 016 F05 135	Lance .	344,00
876	1	F 016 F05 572	3-in-1-nozzle GREEN	
879	1	F 016 F05 036	Bottle 450ml .	492,00
880	1	F 016 F05 029	High pressure foam nozzle	343,00
881	1	F 016 F04 795	Retaining clip .	34,00
883	1	F 016 F05 032	High-Pressure Hose 7m .	838,00
884	1	F 016 F05 492	Hose Coupling .	96,00
888	1	F 016 F05 661	Water filter .	98,00

Please observe: Repairing, modifying and testing of electro-tools are to be performed professionally.The safety regulations according to IEC, EN, VDE, AFNOR and other regulations of the individual countries are to be observed. Subject to change.
This price list supersedes all previous edition. Prices are subjected to change without any prior notice.

3 600 HA7 C40
Stand ~~20-10~~
Issue 21-10-21

Fig. /Abb. 2

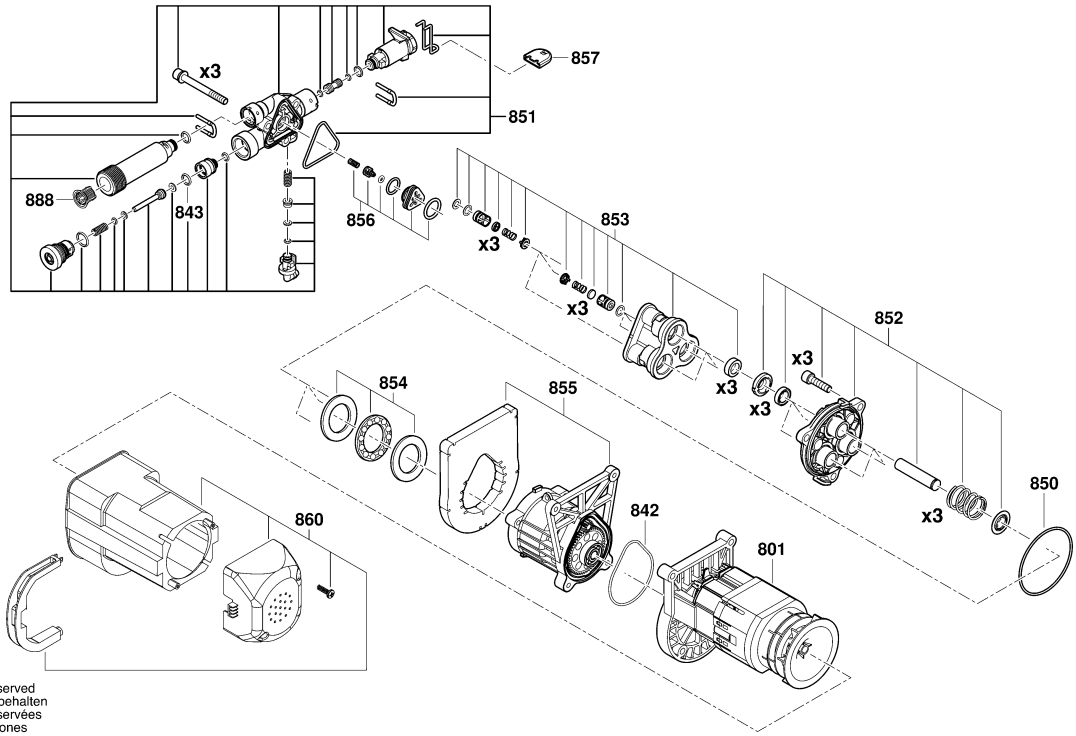

Modifications reserved
Änderungen vorbehalten
Modifications réservées
Salvo modificaciones

Model: 3 600 HA7 CF0 = 230 | Date:

Item	Pc	Order no.	Description	LP IN INR	Item	Pc	Order no.	Description	LP IN INR

Please observe: Repairing, modifying and testing of electro-tools are to be performed professionally.The safety regulations according to IEC, EN, VDE, AFNOR and other regulations of the individual countries are to be observed. Subject to change.
This price list supersedes all previous edition. Prices are subjected to change without any prior notice.

3 600 HA7 C40
Stand } ~~19-08~~
Issue } 23-07-03 **Fig. /Abb. 3**

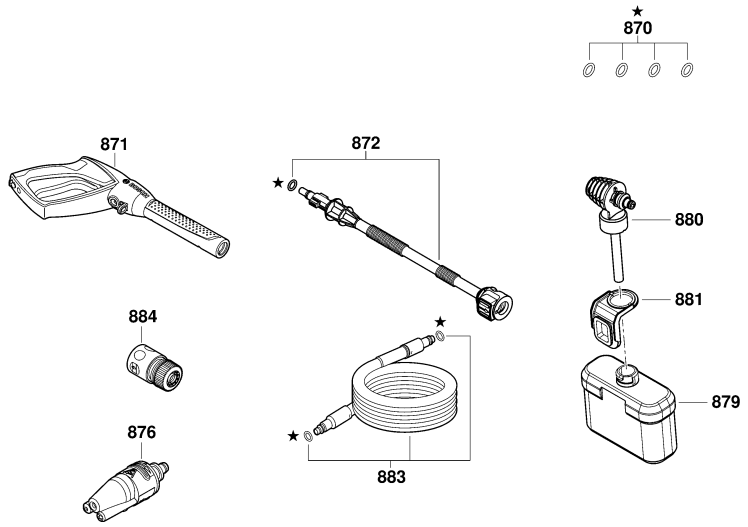

Modifications reserved
Änderungen vorbehalten
Modifications réservées
Salvo modificaciones

Model: 3 600 HA7 CF0 = 230	Date:

Item	Pc	Order no.	Description	LP IN INR	Item	Pc	Order no.	Description	LP IN INR

Please observe: Repairing, modifying and testing of electro-tools are to be performed professionally.The safety regulations according to IEC, EN, VDE, AFNOR and other regulations of the individual countries are to be observed. Subject to change.
This price list supersedes all previous edition. Prices are subjected to change without any prior notice.

3 600 HA7 D40
Stand } ~~19-05~~
Issue } 19-12-02

Fig. /Abb. 1

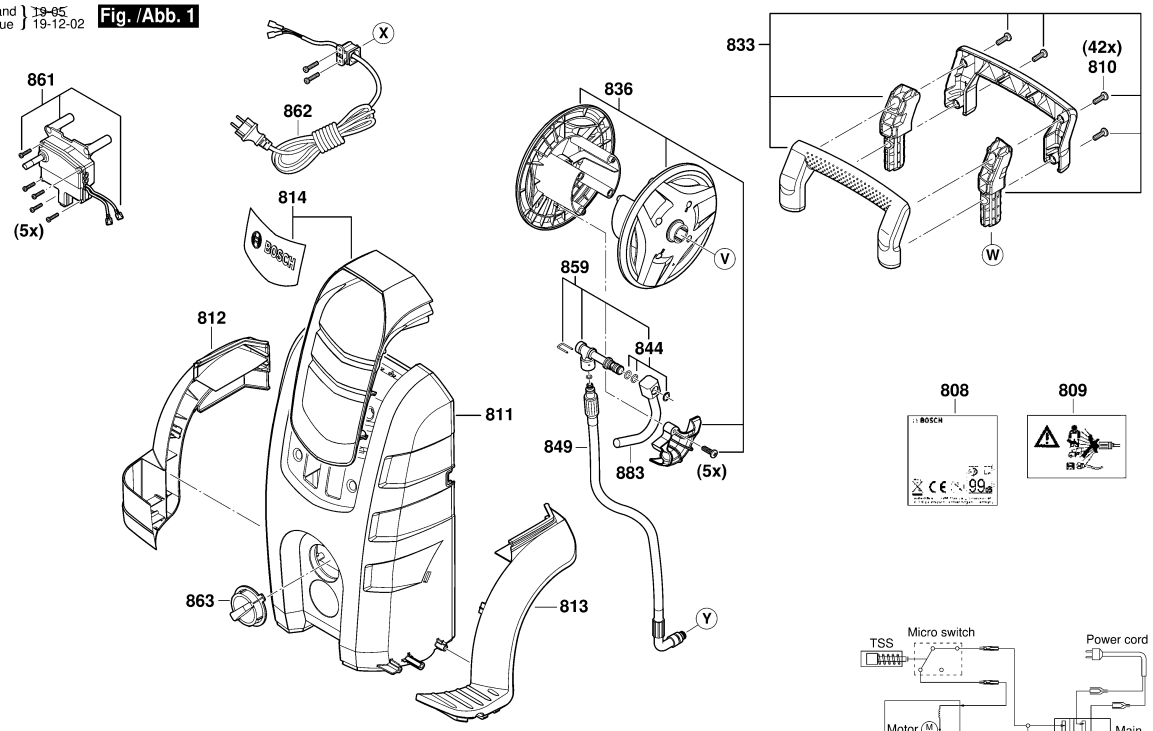

Modifications reserved
Änderungen vorbehalten
Modifications réservées
Salvo modificaciones

Model: 3 600 HA7 DF0 = 230 | Date:

Item	Pc	Order no.	Description	LP IN INR
801	1	F 016 F04 644	Motor .	6.040,00
808	1	F 016 F05 356	Nameplate .	
809	1	F 016 F05 436	Warning Label .	
810	42	F 016 F04 810	Torx SH cap screw .	44,00
811	1	F 016 F05 357	front cover .	1.780,00
812	1	F 016 F04 616	front cover .	254,00
813	1	F 016 F04 617	front cover .	235,00
814	1	F 016 F05 358	front cover .	636,00
820	1	F 016 F04 623	Cover .	2.726,00
821	1	F 016 F05 359	Cover .	649,00
833	1	F 016 F05 104	Handle .	972,00
835	1	F 016 F04 649	Set Of Handles .	406,00
836	1	F 016 F04 666	Hose Reel Carrier .	1.756,00
843	1	F 016 F05 402	O-Ring .	47,00
844	1	3 600 HA7 D40	High Pressure Cleaner .	
844	1	F 016 F05 403	O-Ring Kit .	59,00
847	1	F 016 F05 046	Wobble Plate .	662,00
849	1	F 016 F05 360	High-Pressure Hose 0,4m .	1.143,00
850	1	F 016 F04 459	O-Ring .	244,00
851	1	F 016 F04 643	Pump head .	1.066,00
852	1	F 016 F04 642	Piston Guide .	719,00
853	1	F 016 F04 440	Pump unit .	568,00
856	1	F 016 F04 460	Non-Return Valve .	242,00
858	1	F 016 F04 627	Pump Mounting .	210,00

Item	Pc	Order no.	Description	LP IN INR
859	1	F 016 F04 651	Connector .	3.892,00
860	1	F 016 F04 652	Motor cover .	349,00
861	1	F 016 F04 636	Switch Box .	2.074,00
862	1	F 016 F04 639	Power supply cord IND .	1.137,00
863	1	F 016 F04 613	Switch Actuator .	176,00
864	1	F 016 F05 501	Clip .	368,00
865	1	F 016 F05 184	Capacitor .	461,00
866	1	F 016 F04 646	Bearing set .	344,00
870	1	F 016 F04 458	Seal Kit 2 x (5.3 x 1.6), 2 x	239,00
871	1	F 016 F05 512	Trigger .	1.445,00
872	1	F 016 F05 281	Lance .	559,00
874	1	F 016 F05 361	Wide Angle Nozzle GREEN	254,00
875	1	F 016 F05 362	Nozzle WHITE	453,00
879	1	F 016 F05 279	Bottle .	329,00
880	1	F 016 F05 560	Nozzle Durchmesser 1,10	361,00
882	1	F 016 F05 855	Water filter .	
883	1	F 016 F04 667	High-Pressure Hose 8m .	1.560,00
884	1	F 016 F05 492	Hose Coupling .	96,00
888	1	F 016 F05 661	Water filter .	98,00

Please observe: Repairing, modifying and testing of electro-tools are to be performed professionally.The safety regulations according to IEC, EN, VDE, AFNOR and other regulations of the individual countries are to be observed. Subject to change.
This price list supersedes all previous edition. Prices are subjected to change without any prior notice.

3 600 HA7 D40
Stand Issue } 19-04-08 **Fig. /Abb. 2**

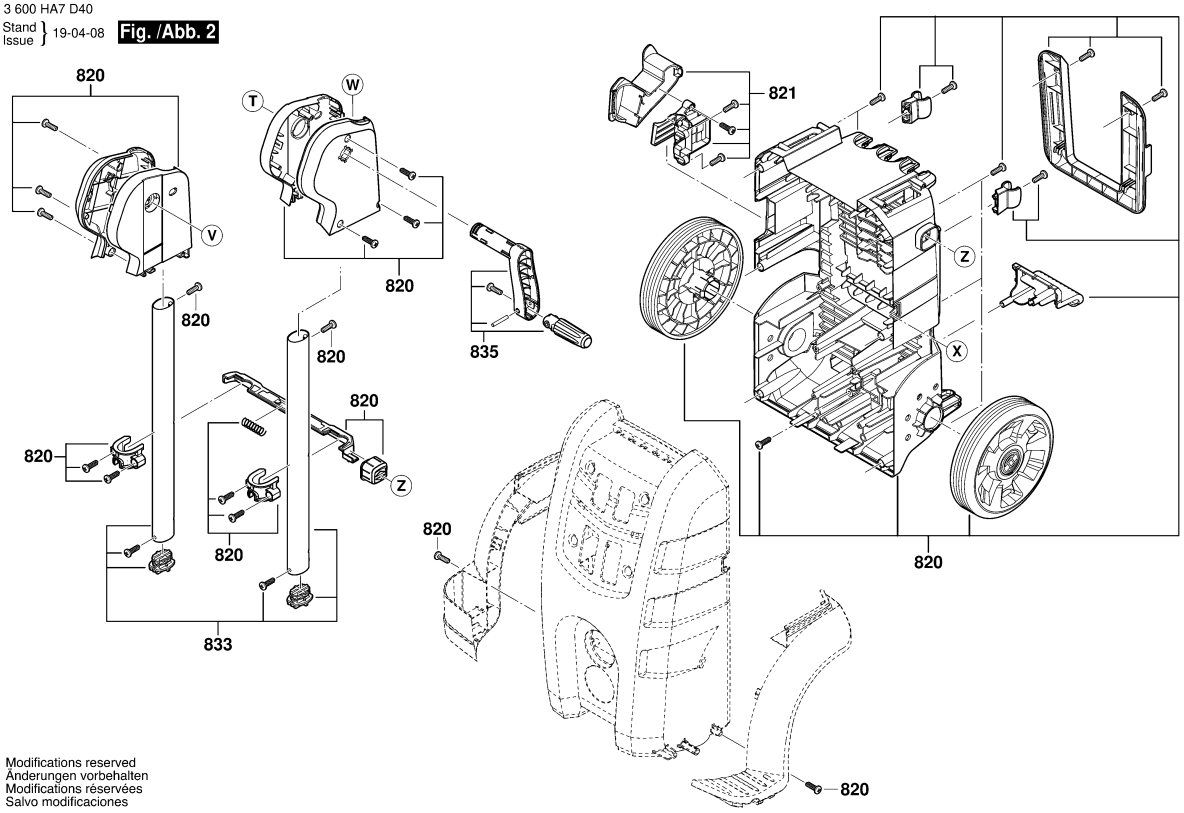

Modifications reserved
Änderungen vorbehalten
Modifications réservées
Salvo modificaciones

Model: 3 600 HA7 DF0 = 230	Date:

Item	Pc	Order no.	Description	LP IN INR	Item	Pc	Order no.	Description	LP IN INR

Please observe: Repairing, modifying and testing of electro-tools are to be performed professionally.The safety regulations according to IEC, EN, VDE, AFNOR and other regulations of the individual countries are to be observed. Subject to change.
This price list supersedes all previous edition. Prices are subjected to change without any prior notice.

3 600 HA7 D40
Stand } ~~19-07~~
Issue } 21-10-21

Fig. /Abb. 3

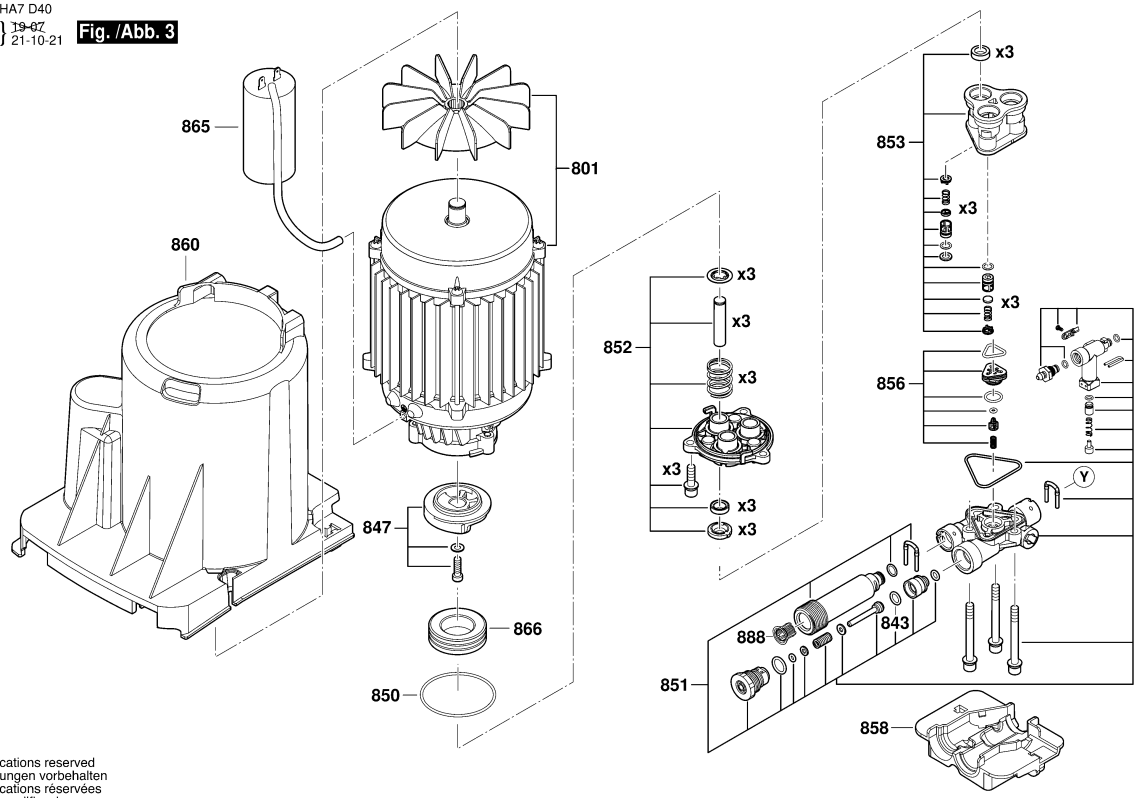

Modifications reserved
Änderungen vorbehalten
Modifications réservées
Salvo modificaciones

Model: 3 600 HA7 DF0 = 230 | Date:

Item	Pc	Order no.	Description	LP IN INR	Item	Pc	Order no.	Description	LP IN INR

Please observe: Repairing, modifying and testing of electro-tools are to be performed professionally.The safety regulations according to IEC, EN, VDE, AFNOR and other regulations of the individual countries are to be observed. Subject to change.
This price list supersedes all previous edition. Prices are subjected to change without any prior notice.

3 600 HA7 D40
Stand } ~~21-10~~
Issue } 22-11-23

Fig. /Abb. 4

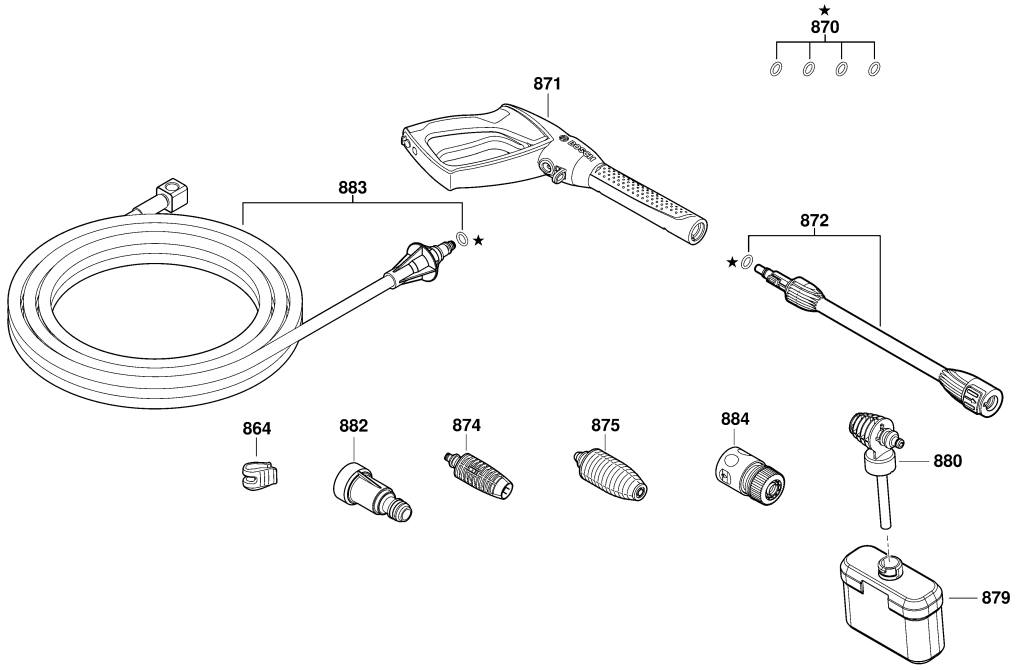

Modifications reserved
Änderungen vorbehalten
Modifications réservées
Salvo modificaciones

Model: 3 600 HA7 DF0 = 230	Date:

Item	Pc	Order no.	Description	LP IN INR	Item	Pc	Order no.	Description	LP IN INR

Please observe: Repairing, modifying and testing of electro-tools are to be performed professionally.The safety regulations according to IEC, EN, VDE, AFNOR and other regulations of the individual countries are to be observed. Subject to change.
This price list supersedes all previous edition. Prices are subjected to change without any prior notice.

3 600 HA7 740
Stand } 19-04
Issue } 19-12-02

Fig. /Abb. 1

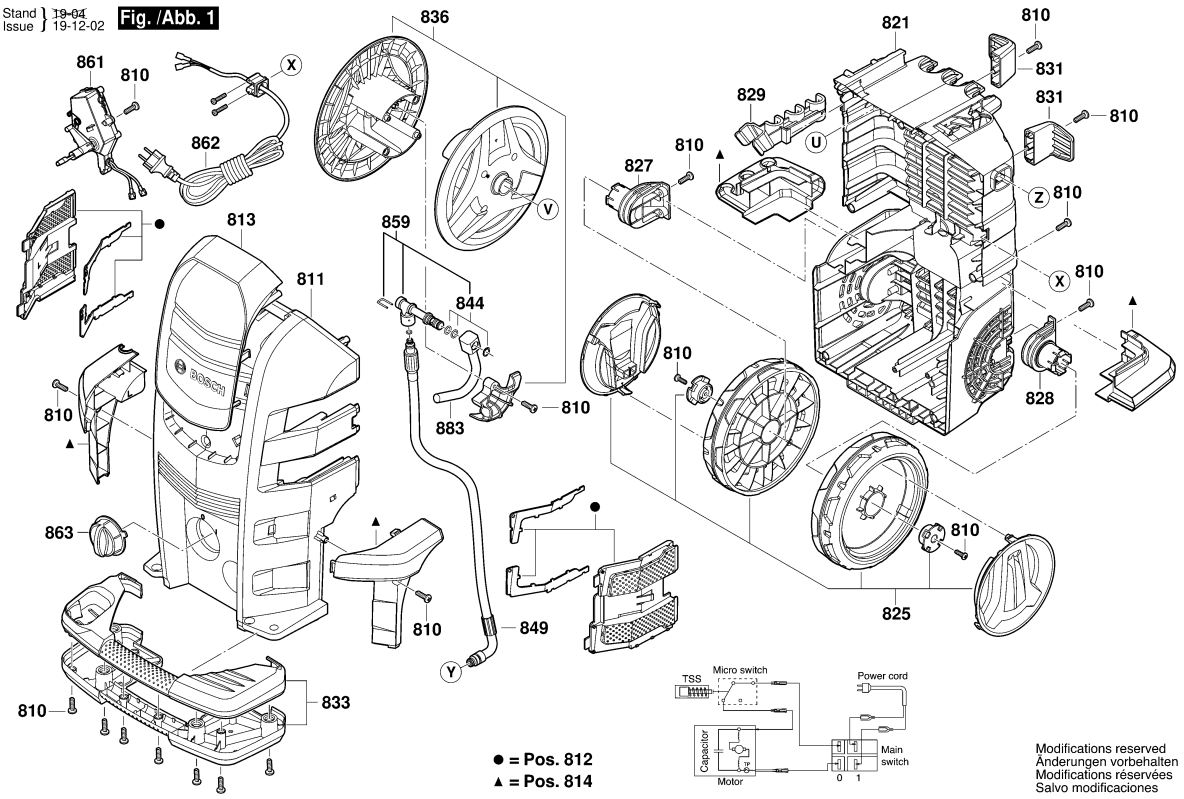

Model: 3 600 HA7 7F0 = 230 | Date:

Item	Pc	Order no.	Description	LP IN INR
801	1	F 016 F05 476	Motor .	10.293,00
808	1	F 016 F05 101	Nameplate .	
809	1	F 016 F05 437	Warning Label .	
810	47	F 016 F04 810	Torx SH cap screw .	44,00
811	1	F 016 F05 452	front cover .	2.136,00
812	1	F 016 F05 453	front cover .	2.136,00
813	1	F 016 F05 561	front cover .	
814	1	F 016 F05 457	front cover .	651,00
820	1	F 016 F05 466	Cover .	397,00
821	1	F 016 F05 472	Cover .	1.460,00
822	1	F 016 F05 475	Cover .	171,00
825	1	F 016 F05 469	Wheel .	565,00
827	1	F 016 F05 470	Axle .	83,00
828	1	F 016 F05 473	Axle .	70,00
829	1	F 016 F05 458	Hook .	368,00
830	1	F 016 F05 471	Hook .	62,00
831	2	F 016 F05 474	Hook .	62,00
833	1	F 016 F05 456	Handle .	397,00
834	1	F 016 F05 467	Handle .	1.164,00
835	1	F 016 F04 649	Set Of Handles .	406,00
836	1	F 016 F05 468	Hose Reel Carrier .	326,00
843	1	F 016 F05 402	O-Ring .	47,00
844	1	F 016 F05 403	O-Ring Kit .	59,00
847	1	F 016 F05 462	Wobble Plate .	195,00

Item	Pc	Order no.	Description	LP IN INR
848	4	F 016 F05 477	Washer .	561,00
849	1	F 016 F05 511	High-Pressure Hose .	1.164,00
850	1	F 016 F05 454	Seal Kit .	37,00
851	1	F 016 F05 465	Pump head .	299,00
852	1	F 016 F04 947	Piston Guide .	939,00
853	1	F 016 F05 463	Pump unit .	681,00
856	1	F 016 F05 464	Non-Return Valve .	238,00
859	1	F 016 F04 651	Connector .	3.892,00
860	1	F 016 F05 451	Motor cover .	623,00
861	1	F 016 F05 460	Switch Box .	735,00
862	1	F 016 F05 482	Power supply cord .	1.416,00
863	1	F 016 F04 805	Switch Actuator .	176,00
864	1	F 016 F05 501	Clip .	368,00
865	1	F 016 F05 184	Capacitor .	461,00
866	1	F 016 F05 478	Bearing set .	408,00
867	1	F 016 F05 479	Fan .	397,00
868	4	F 016 F05 459	Cap .	368,00
870	1	F 016 F04 458	Seal Kit 2 x (5.3 x 1.6), 2 x	239,00
871	1	F 016 F05 512	Trigger .	1.445,00
872	1	F 016 F05 281	Lance .	559,00
874	1	F 016 F05 493	Fixed fan jet nozzle 60°	388,00
877	1	F 016 F05 494	Vario Jet Fan Lance .	554,00
878	1	F 016 F05 495	Roto Jet Fan Lance .	509,00
879	1	F 016 F05 279	Bottle .	329,00

Please observe: Repairing, modifying and testing of electro-tools are to be performed professionally.The safety regulations according to IEC, EN, VDE, AFNOR and other regulations of the individual countries are to be observed. Subject to change.
This price list supersedes all previous edition. Prices are subjected to change without any prior notice.

3 600 HA7 740
Stand / Issue } 19-04-15 **Fig. /Abb. 2**

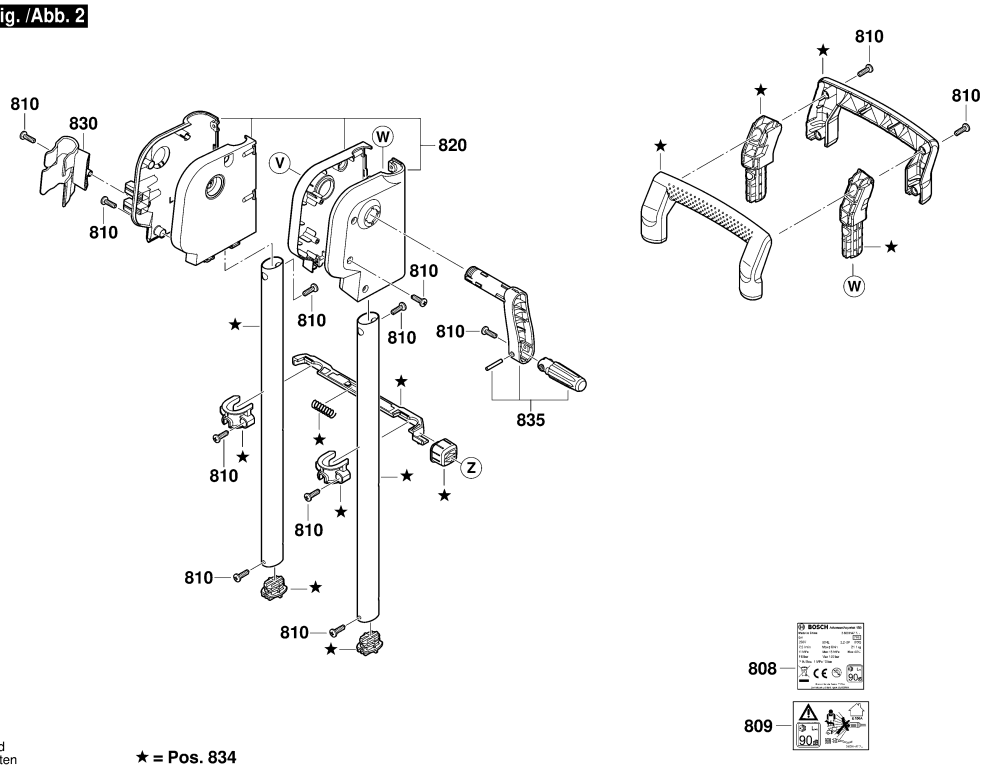

Modifications reserved
Änderungen vorbehalten
Modifications réservées
Salvo modificaciones

★ = Pos. 834

Model: 3 600 HA7 7F0 = 230 | Date:

Item	Pc	Order no.	Description	LP IN INR
880	1	F 016 F05 555	Nozzle .	370,00
882	1	F 016 F05 855	Water filter .	
883	1	F 016 F04 667	High-Pressure Hose 8m .	1.560,00
884	1	F 016 F05 492	Hose Coupling .	96,00
888	1	F 016 F05 661	Water filter .	98,00

Item	Pc	Order no.	Description	LP IN INR

Please observe: Repairing, modifying and testing of electro-tools are to be performed professionally.The safety regulations according to IEC, EN, VDE, AFNOR and other regulations of the individual countries are to be observed. Subject to change.
This price list supersedes all previous edition. Prices are subjected to change without any prior notice.

3 600 HA7 740
Stand } ~~19-07~~
Issue } 21-10-21

Fig. /Abb. 3

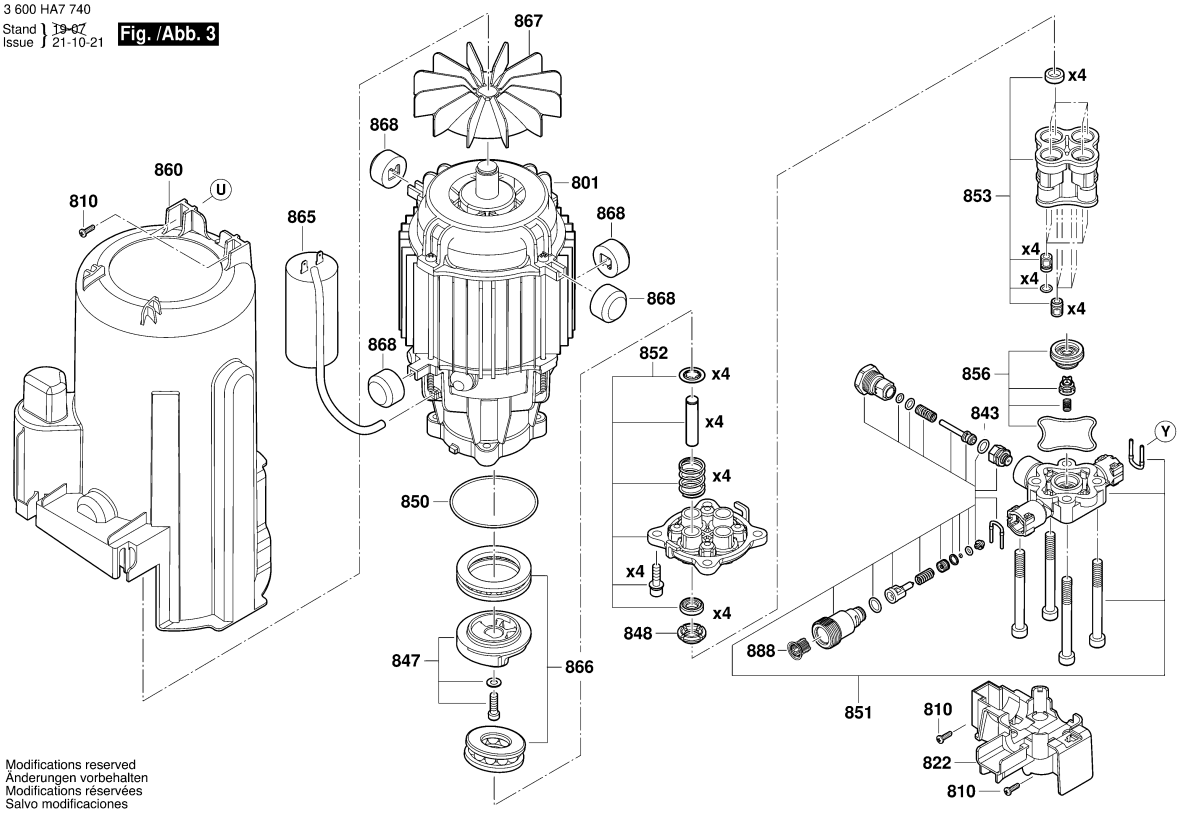

Modifications reserved
Änderungen vorbehalten
Modifications réservées
Salvo modificaciones

Model: 3 600 HA7 7F0 = 230	Date:

Item	Pc	Order no.	Description	LP IN INR	Item	Pc	Order no.	Description	LP IN INR

Please observe: Repairing, modifying and testing of electro-tools are to be performed professionally.The safety regulations according to IEC, EN, VDE, AFNOR and other regulations of the individual countries are to be observed. Subject to change.
This price list supersedes all previous edition. Prices are subjected to change without any prior notice.

3 600 HA7 740
Stand ~~21-10~~
Issue 23-09-11

Fig. /Abb. 4

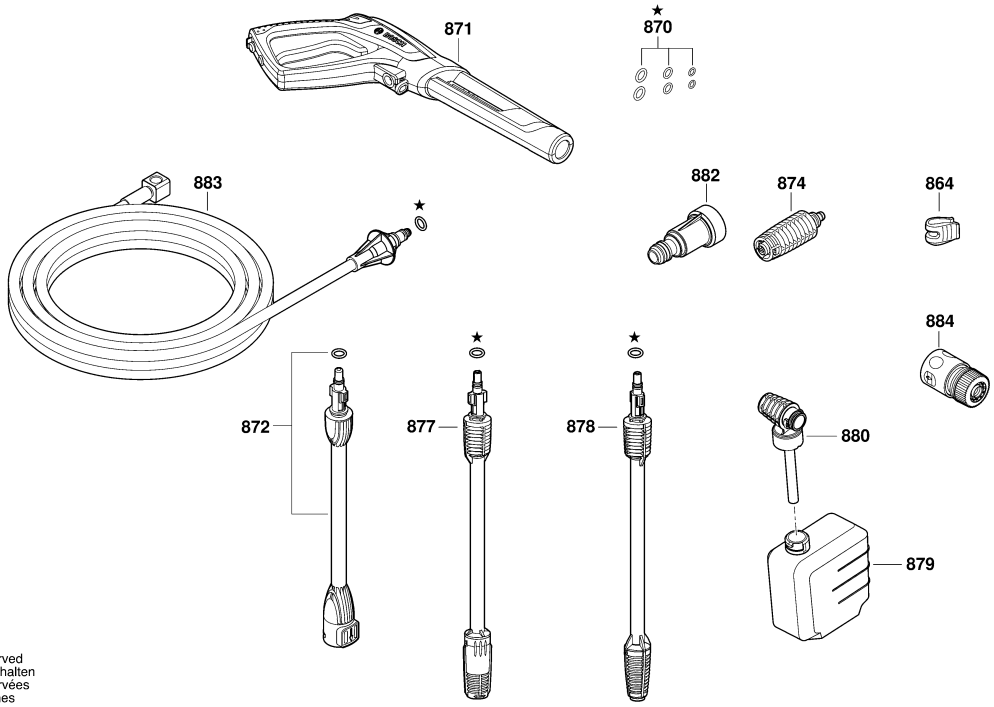

Modifications reserved
Änderungen vorbehalten
Modifications réservées
Salvo modificaciones

Model: 3 600 HA7 7F0 = 230 | Date:

Item	Pc	Order no.	Description	LP IN INR	Item	Pc	Order no.	Description	LP IN INR

Please observe: Repairing, modifying and testing of electro-tools are to be performed professionally.The safety regulations according to IEC, EN, VDE, AFNOR and other regulations of the individual countries are to be observed. Subject to change.
This price list supersedes all previous edition. Prices are subjected to change without any prior notice.

3 600 HA7 840
Stand } ~~19-04~~
Issue } 19-12-02

Fig. /Abb. 1

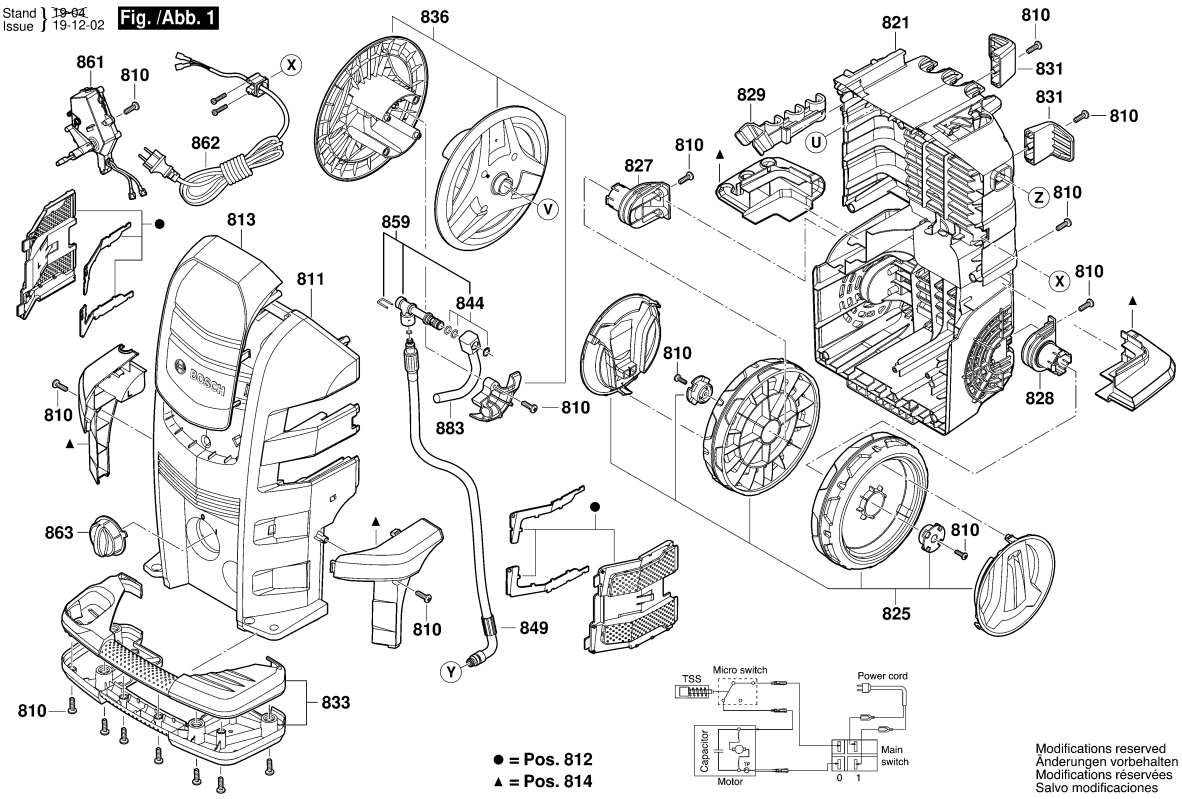

Model: 3 600 HA7 8F0 = 230 | Date:

Item	Pc	Order no.	Description	LP IN INR
801	1	F 016 F05 487	Motor .	11.267,00
808	1	F 016 F05 102	Nameplate .	
809	1	F 016 F05 438	Warning Label .	
810	47	F 016 F04 810	Torx SH cap screw .	44,00
811	1	F 016 F05 452	front cover .	2.136,00
812	1	F 016 F05 483	front cover .	
813	1	F 016 F05 562	front cover .	
814	1	F 016 F05 457	front cover .	651,00
820	1	F 016 F05 466	Cover .	397,00
821	1	F 016 F05 472	Cover .	1.460,00
822	1	F 016 F05 475	Cover .	171,00
825	1	F 016 F05 469	Wheel .	565,00
827	1	F 016 F05 470	Axle .	83,00
828	1	F 016 F05 473	Axle .	70,00
829	1	F 016 F05 458	Hook .	368,00
830	1	F 016 F05 471	Hook .	62,00
831	2	F 016 F05 474	Hook .	62,00
833	1	F 016 F05 456	Handle .	397,00
834	1	F 016 F05 467	Handle .	1.164,00
835	1	F 016 F04 649	Set Of Handles .	406,00
836	1	F 016 F05 468	Hose Reel Carrier .	326,00
843	1	F 016 F05 402	O-Ring .	47,00
844	1	F 016 F05 403	O-Ring Kit .	59,00
846	1	F 016 F05 502	Washer .	62,00

Item	Pc	Order no.	Description	LP IN INR
847	1	F 016 F05 486	Wobble Plate .	254,00
848	1	F 016 F05 488	Washer .	766,00
849	1	F 016 F05 511	High-Pressure Hose .	1.164,00
850	1	F 016 F05 454	Seal Kit .	37,00
851	1	F 016 F05 465	Pump head .	299,00
852	1	F 016 F04 947	Piston Guide .	939,00
853	1	F 016 F05 463	Pump unit .	681,00
856	1	F 016 F05 464	Non-Return Valve .	238,00
859	1	F 016 F04 651	Connector .	3.892,00
860	1	F 016 F04 946	Motor cover .	565,00
861	1	F 016 F05 460	Switch Box .	735,00
862	1	F 016 F05 490	Power supply cord .	
863	1	F 016 F04 805	Switch Actuator .	176,00
864	1	F 016 F05 501	Clip .	368,00
865	1	F 016 F05 185	Capacitor .	687,00
866	1	F 016 F05 478	Bearing set .	408,00
867	1	F 016 F05 479	Fan .	397,00
868	4	F 016 F05 459	Cap .	368,00
870	1	F 016 F04 458	Seal Kit 2 x (5.3 x 1.6), 2 x	239,00
871	1	F 016 F05 512	Trigger .	1.445,00
872	1	F 016 F05 281	Lance .	559,00
874	1	F 016 F05 496	Fixed fan jet nozzle 60°	912,00
877	1	F 016 F05 498	Vario Jet Fan Lance .	912,00
878	1	F 016 F05 499	Roto Jet Fan Lance .	939,00

Please observe: Repairing, modifying and testing of electro-tools are to be performed professionally.The safety regulations according to IEC, EN, VDE, AFNOR and other regulations of the individual countries are to be observed. Subject to change.
This price list supersedes all previous edition. Prices are subjected to change without any prior notice.

3 600 HA7 840
Stand / Issue } 19-04-15 **Fig. /Abb. 2**

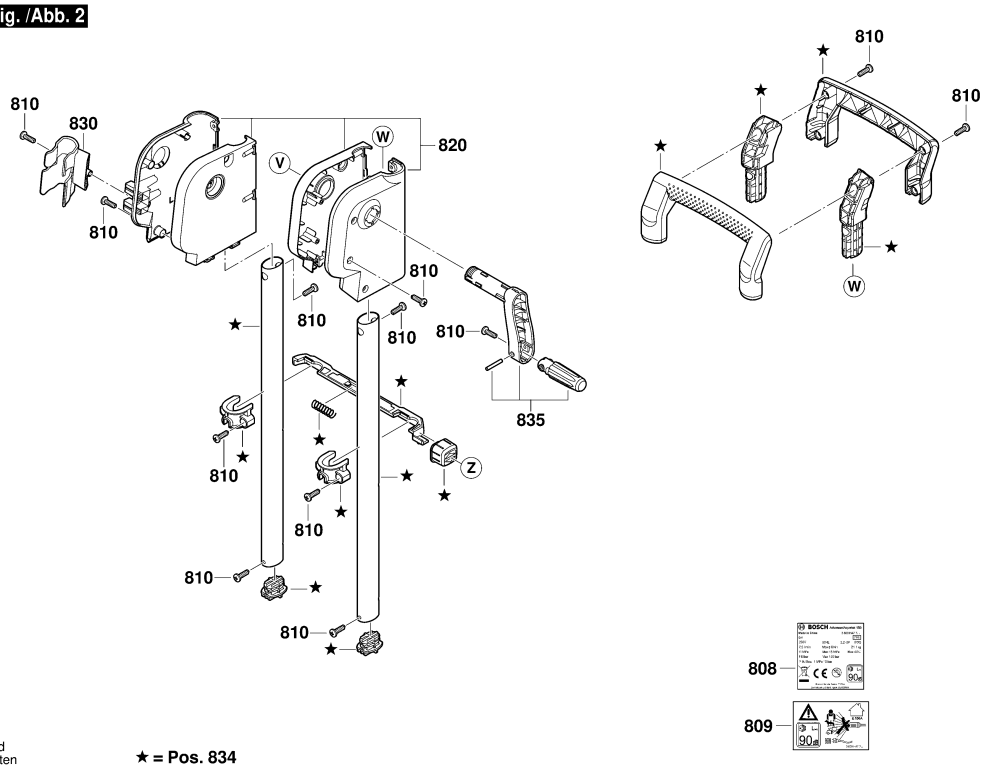

Modifications reserved
Änderungen vorbehalten
Modifications réservées
Salvo modificaciones

★ = Pos. 834

Model: 3 600 HA7 8F0 = 230	Date:

Item	Pc	Order no.	Description	LP IN INR	Item	Pc	Order no.	Description	LP IN INR
879	1	F 016 F05 279	Bottle .	329,00					
880	1	F 016 F05 555	Nozzle .	370,00					
882	1	F 016 F05 855	Water filter .						
883	1	F 016 F05 510	High-Pressure Hose .	3.115,00					
884	1	F 016 F05 492	Hose Coupling .	96,00					
888	1	F 016 F05 661	Water filter .	98,00					

Please observe: Repairing, modifying and testing of electro-tools are to be performed professionally.The safety regulations according to IEC, EN, VDE, AFNOR and other regulations of the individual countries are to be observed. Subject to change.
This price list supersedes all previous edition. Prices are subjected to change without any prior notice.

3 600 HA7 840
Stand } ~~19-07~~
Issue } 21-10-21

Fig. /Abb. 3

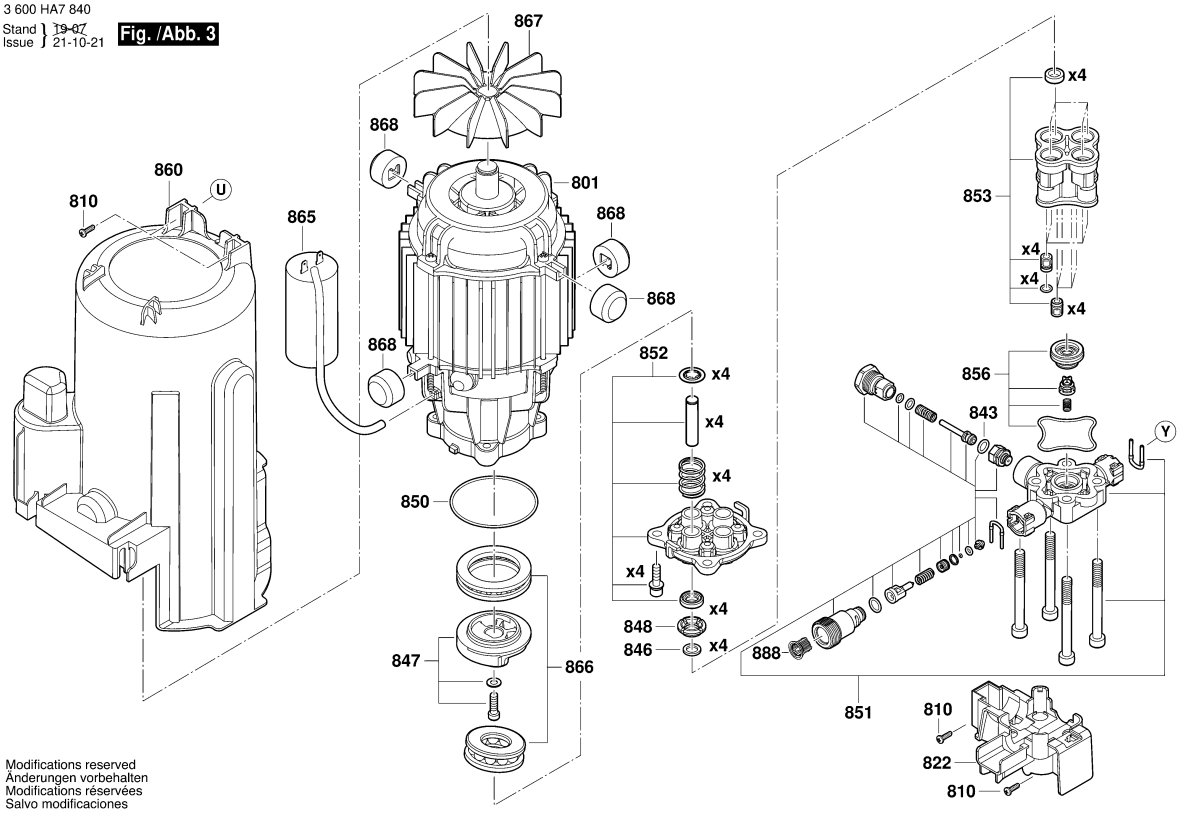

Modifications reserved
Änderungen vorbehalten
Modifications réservées
Salvo modificaciones

Model: 3 600 HA7 8F0 = 230	Date:

Item	Pc	Order no.	Description	LP IN INR	Item	Pc	Order no.	Description	LP IN INR

Please observe: Repairing, modifying and testing of electro-tools are to be performed professionally.The safety regulations according to IEC, EN, VDE, AFNOR and other regulations of the individual countries are to be observed. Subject to change.
This price list supersedes all previous edition. Prices are subjected to change without any prior notice.

3 600 HA7 840
Stand } ~~21-10~~
Issue } 23-09-11 **Fig. /Abb. 4**

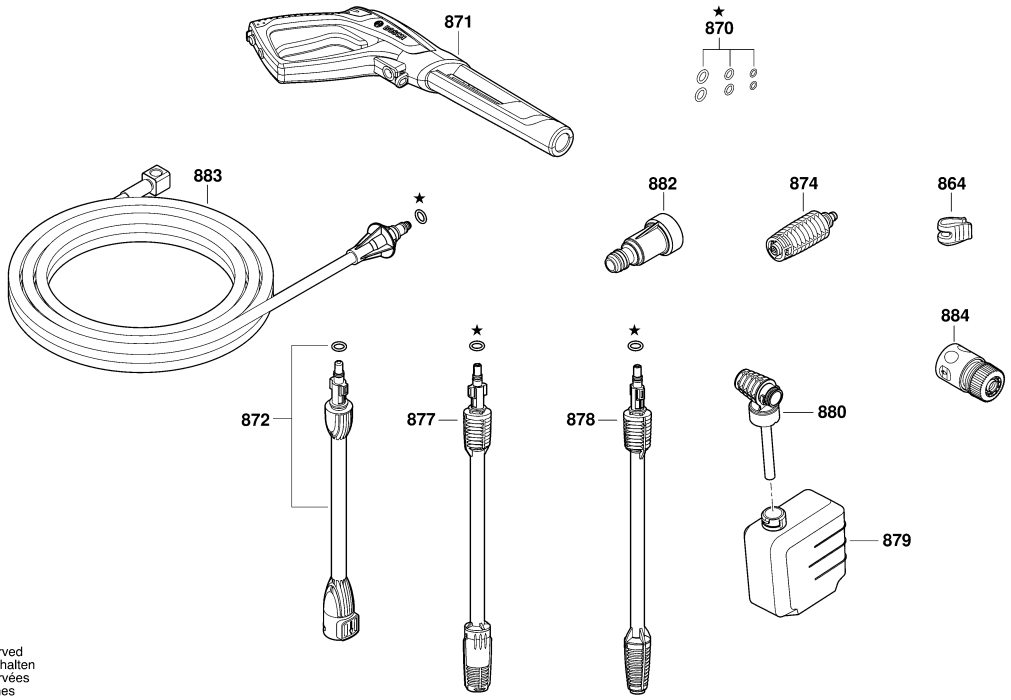

Modifications reserved
Änderungen vorbehalten
Modifications réservées
Salvo modificaciones

Model: 3 600 HA7 8F0 = 230	Date:

Item	Pc	Order no.	Description	LP IN INR	Item	Pc	Order no.	Description	LP IN INR

Please observe: Repairing, modifying and testing of electro-tools are to be performed professionally.The safety regulations according to IEC, EN, VDE, AFNOR and other regulations of the individual countries are to be observed. Subject to change.
This price list supersedes all previous edition. Prices are subjected to change without any prior notice.

BOSCH Power Tools	Battery Vacuum Cleaner	Model GAS 18V-1 3 601 JC6 2L0 | BO

3 601 JC6 200
Issue Stand 18-07-02 **Fig./Abb. 1**

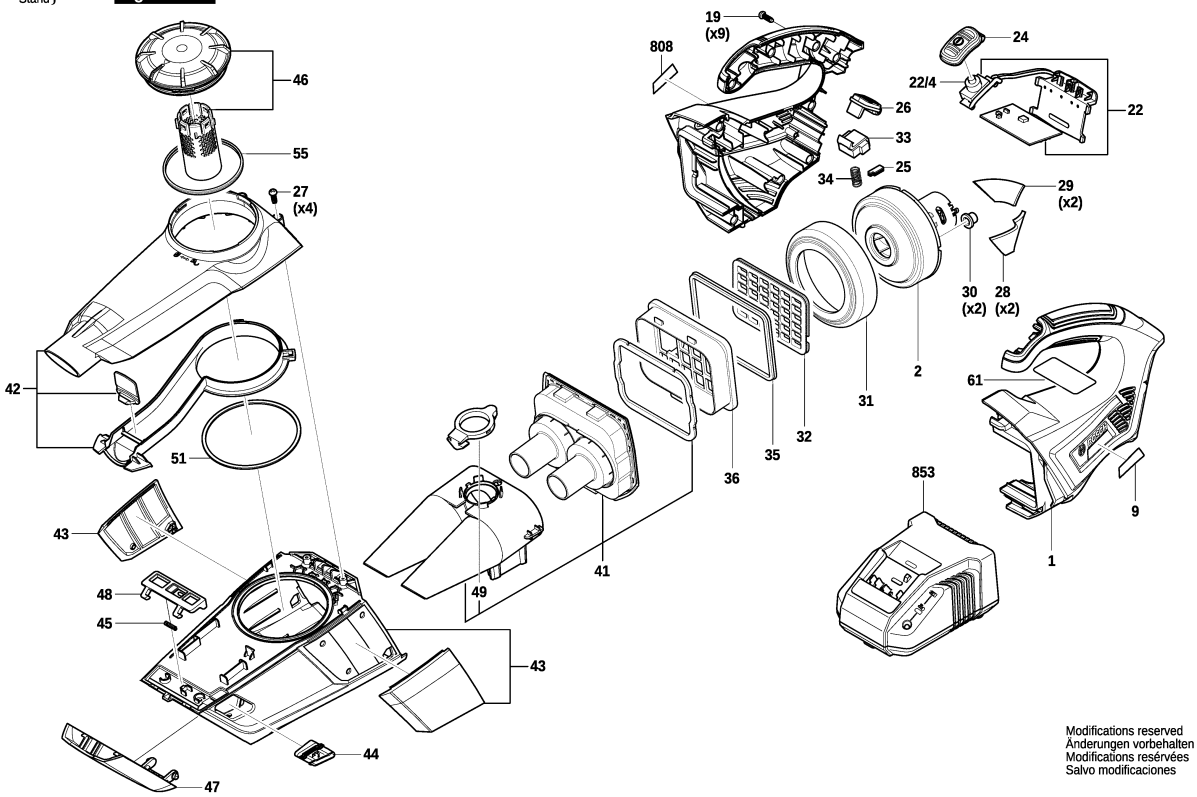

Modifications reserved
Änderungen vorbehalten
Modifications reservées
Salvo modificaciones

Model: 3 601 JC6 2L0 = 18 | Date:

Item	Pc	Order no.	Description	LP IN INR
1	1	1 619 PB2 076	Motor Housing .	945,00
2	1	1 619 PB2 077	DC motor .	1.151,00
9	1	1 619 PB2 065	Manufacturer's nameplate	
19	9	1 619 PB2 078	Tapping Screw .	28,00
22	1	1 619 PB0 706	Electronic Module .	1.253,00
22/4	1	2 607 202 358	On-Off Switch .	453,00
24	1	1 619 PB2 079	Switch Button .	49,00
25	1	1 619 PB2 080	Seal .	28,00
26	1	1 619 PB2 081	Push-Button .	28,00
27	4	1 619 PB2 082	Tapping Screw .	28,00
28	2	1 619 PB2 083	Sponge .	28,00
29	2	1 619 PB2 084	Sponge .	28,00
30	1	1 619 PB2 085	Rubber Pad .	28,00
31	1	1 619 PB2 086	Sealing Cover .	43,00
32	1	1 619 PB2 087	Grid .	28,00
33	1	1 619 PB2 088	Stop Block .	28,00
34	1	1 619 PB2 089	Contact strap .	28,00
35	1	1 619 PB2 090	Sealing Ring .	28,00
36	1	1 619 PB2 034	Filter .	249,00
41	1	1 619 PB2 091	Dust Separator .	276,00
42	1	1 619 PB2 099	Inlet Cover .	196,00
43	1	1 619 PB2 092	Dust Chamber .	489,00
44	1	1 619 PB2 093	Button .	28,00
45	1	1 619 PB2 094	Contact strap .	28,00

Item	Pc	Order no.	Description	LP IN INR
46	1	1 619 PB2 101	Cover .	59,00
47	1	1 619 PB2 095	front cover .	125,00
48	1	1 619 PB2 096	Sliding Block .	28,00
49	1	1 619 PB2 097	Seal .	28,00
51	1	1 619 PB2 098	Sealing Ring .	28,00
55	1	1 619 PB2 100	Sealing Ring .	28,00
651	1	1 619 PA9 899	floor nozzle .	289,00
652	1	1 619 PA9 897	Crevice Nozzle .	28,00
653	1	1 619 PA9 898	Suction Tube .	57,00
654	1	1 619 PB2 102	Holder .	28,00
655	1	1 619 PB2 039	Hose .	82,00
808	1	1 619 PB2 156	Nameplate .	
851	1	1 607 A35 0JR	Battery Pack GBA 18V	
851	1	1 607 A35 0MA	Battery Pack GBA 18V	
851	1	1 607 A35 0B2	Battery Pack 18V 3.0Ah Li	
851	1	1 607 A35 0M0	Battery Pack GBA 18V	
851	1	2 607 337 069	Battery Pack BBS MR,	
851	1	2 607 337 263	Battery Pack GBA 18V 6.0	
851	1	2 607 337 069	Battery Pack BBS MR,	
851	1	1 607 A35 0AT	Battery Pack GBA 18V	
851	1	1 607 A35 0F7	Battery Pack GBA 18V	
853	1	2 607 225 439	Fast Charger CN	
853	1	2 607 225 937	Charger CN GAL 1880 CV	

Please observe: Repairing, modifying and testing of electro-tools are to be performed professionally.The safety regulations according to IEC, EN, VDE, AFNOR and other regulations of the individual countries are to be observed. Subject to change.
This price list supersedes all previous edition. Prices are subjected to change without any prior notice.

3 601 JC6 200
Issue / Stand 17-06-22 **Fig./Abb. 2**

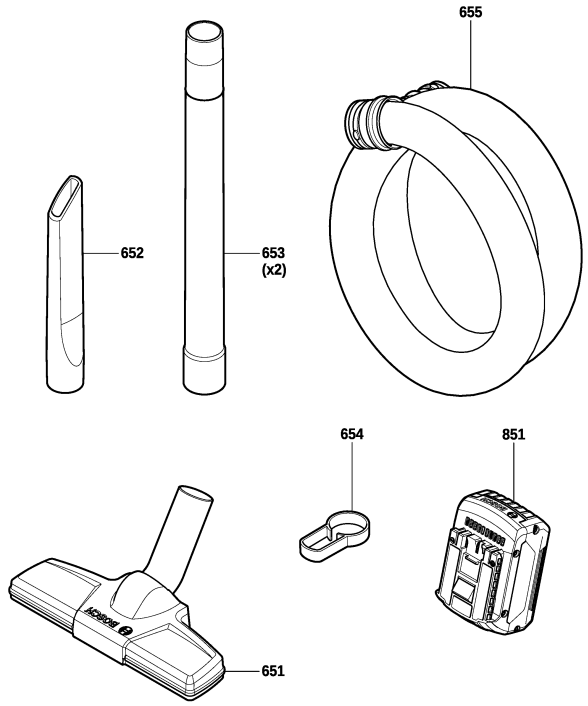

Modifications reserved
Änderungen vorbehalten
Modifications resérvées
Salvo modificaciones

Model: 3 601 JC6 2L0 = 18 | Date:

Item	Pc	Order no.	Description	LP IN INR	Item	Pc	Order no.	Description	LP IN INR

Please observe: Repairing, modifying and testing of electro-tools are to be performed professionally.The safety regulations according to IEC, EN, VDE, AFNOR and other regulations of the individual countries are to be observed. Subject to change.
This price list supersedes all previous edition. Prices are subjected to change without any prior notice.

BOSCH Power Tools	Blower	Model GBL 18V-120 3 601 JF5 1L0 | BO

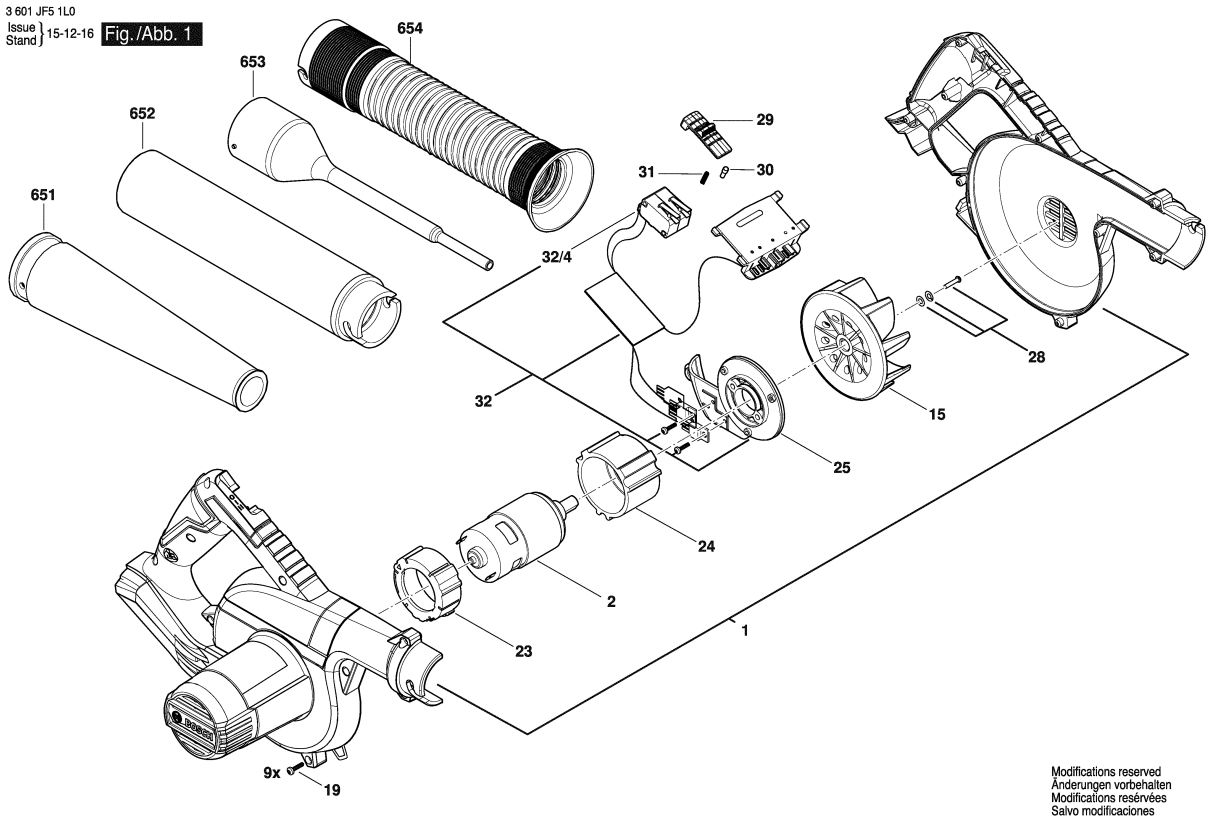

Model: 3 601 JF5 1L0 = 18 | Date:

Item	Pc	Order no.	Description	LP IN INR	Item	Pc	Order no.	Description	LP IN INR
1	1	1 619 PA9 070	Motor Housing .	1.346,00					
2	1	1 619 PA9 071	DC motor .	1.672,00					
15	1	1 619 PA9 073	Fan .	310,00					
19	1	1 619 PA9 074	Tapping Screw .	36,00					
23	1	1 619 PA9 075	Motor Cradle .	182,00					
24	1	1 619 PA9 076	Motor Cradle .	233,00					
28	1	1 619 PA9 080	Pan head screw .	29,00					
29	1	1 619 PA9 081	Switch Slide .	47,00					
30	1	1 619 PA9 082	Guide Pin .	63,00					
31	1	1 619 PA9 083	Contact strap .	63,00					
32	1	1 619 PA9 085	Electronics Module .	1.298,00					
32/4	2	2 607 202 322	On-Off Switch .	445,00					
651	1	1 619 PA9 087	Nozzle .	285,00					
652	1	1 619 PA9 088	Extension Tube .	257,00					
653	1	1 619 PA9 089	Nozzle .	285,00					
654	1	1 619 PA9 228	Flexible Connection .	397,00					

Please observe: Repairing, modifying and testing of electro-tools are to be performed professionally.The safety regulations according to IEC, EN, VDE, AFNOR and other regulations of the individual countries are to be observed. Subject to change.
This price list supersedes all previous edition. Prices are subjected to change without any prior notice.

BOSCH Power Tools	Cordless Drill Driver	Model GSR 120-LI 3 601 JG8 080 | BO

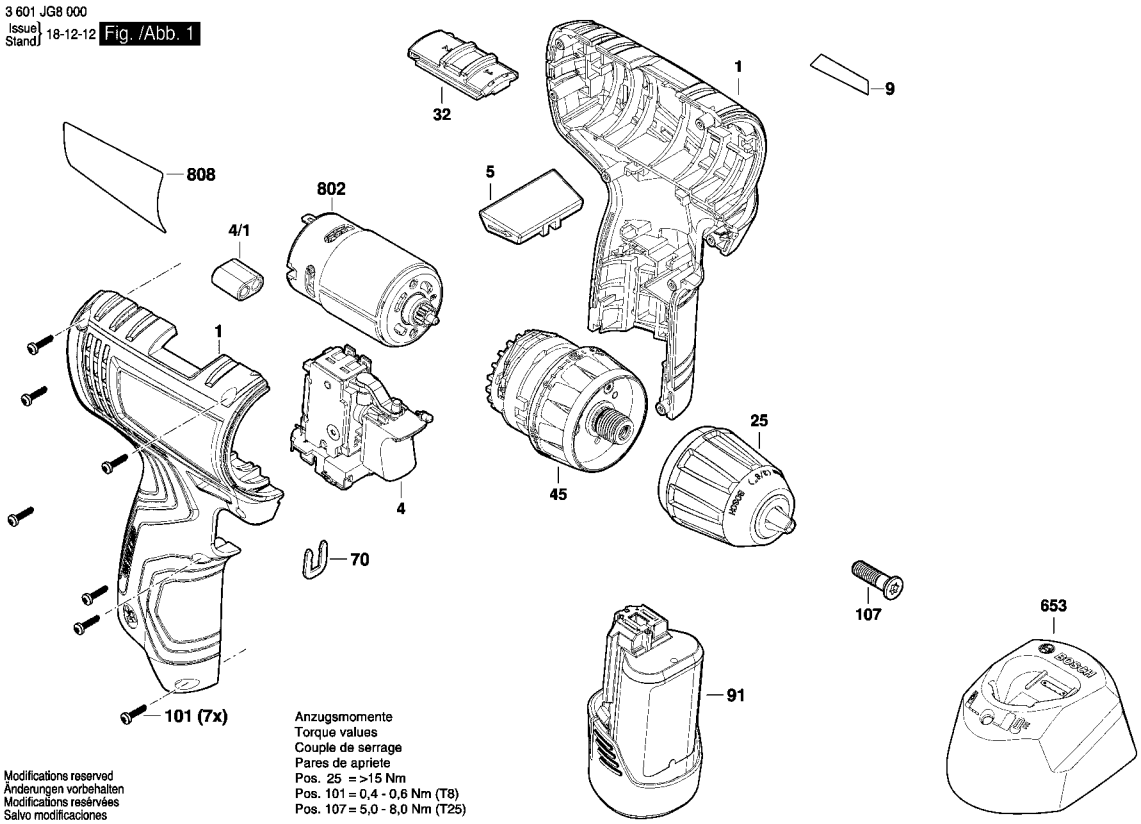

Model: 3 601 JG8 080 = 12 | Date:

Item	Pc	Order no.	Description	LP in INR	Item	Pc	Order no.	Description	LP in INR
1	1	1 605 806 5M0	Housing .	312,00					
4	1	2 607 202 520	Switch Assembly .	870,00					
4/1	1	1 607 502 694	Ferrite .	30,00					
5	1	1 600 A01 6SU	Changeover Lever .	30,00					
9	1	1 601 11C 2UV	Manufacturer's nameplate .						
25	1	1 600 A01 03S	Keyless Chuck .	710,00					
32	1	2 609 199 279	Switchover Unit .	122,00					
45	1	1 600 A01 2MN	Gear Box .	1.179,00					
70	1	2 609 110 838	Clip .	28,00					
91	1	1 607 A35 0C5	Battery Pack GBA 12V						
91	1	1 607 A35 0C9	Battery Pack GBA 10.8V						
101	7	2 609 111 496	Screw .	36,00					
107	1	2 603 421 229	Countersunk-Head Screw	50,00					
653	1	1 600 A00 HR1	Fast Charger EU GAL	957,00					
653	1	1 600 A00 HR3	Fast Charger GB GAL	966,00					
653	1	1 600 A00 HR0	Fast Charger CN GAL 1230						
653	1	2 607 226 195	Fast Charger GAL 12V-20						
653	1	2 607 226 189	Fast Charger GB GAL						
802	1	1 607 000 D7K	Motor Spare Parts Set .	536,00					
808	1	1 601 11A 6LE	Nameplate .						

Please observe: Repairing, modifying and testing of electro-tools are to be performed professionally.The safety regulations according to IEC, EN, VDE, AFNOR and other regulations of the individual countries are to be observed. Subject to change.
This price list supersedes all previous edition. Prices are subjected to change without any prior notice.

BOSCH Power Tools	Cordless Drill Driver	Model GSR 180-LI 3 601 JF8 1K0 | BO

3 601 JF8 100
Issue / Stand } 17-12-13 Fig./Abb. 1

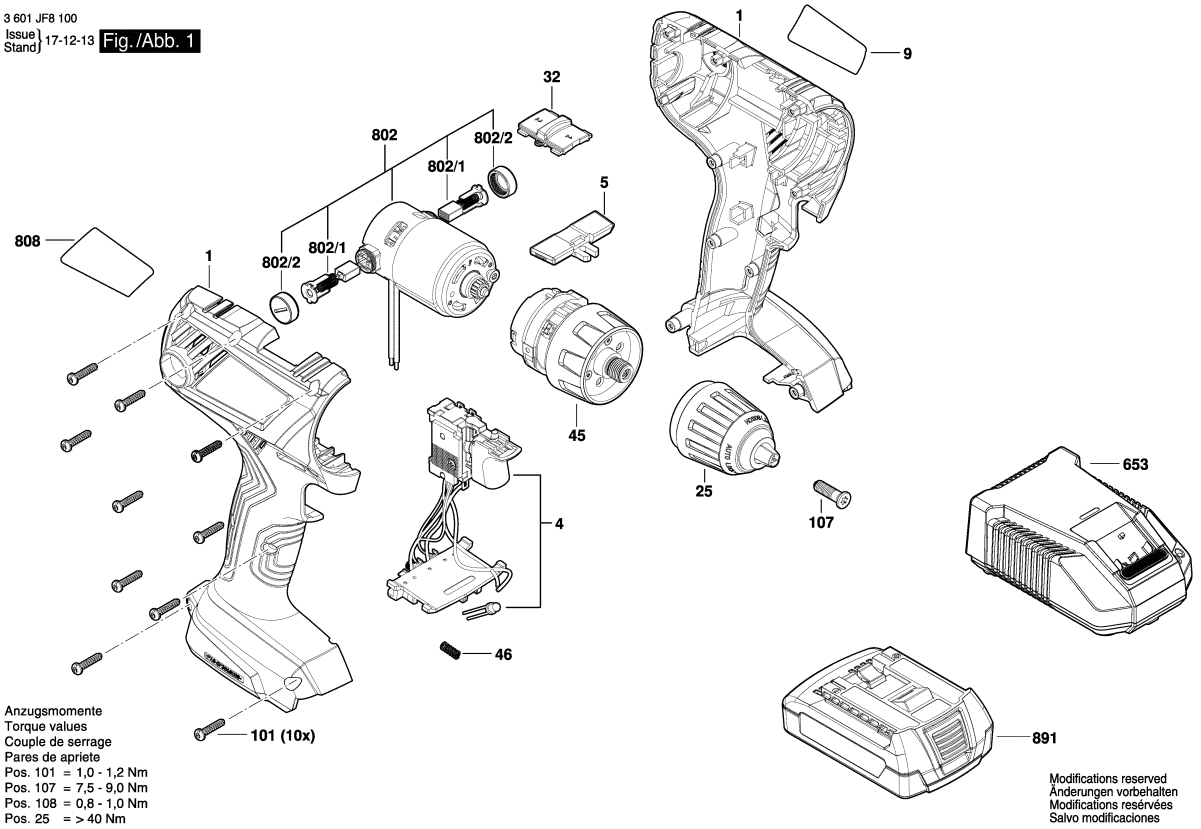

Model: 3 601 JF8 1K0 = 18 | Date:

Item	Pc	Order no.	Description	LP IN INR	Item	Pc	Order no.	Description	LP IN INR
1	1	2 609 101 741	Housing .	534,00					
4	1	2 607 202 330	Electronics Module .	1.090,00					
5	1	2 609 101 484	Adjusting lever .	36,00					
9	1	2 609 138 606	Manufacturer's nameplate						
25	1	2 609 112 190	Keyless Chuck .	670,00					
32	1	2 609 199 812	Switchover Unit .	97,00					
45	1	1 600 A00 P8Z	Gear Box .	1.244,00					
46	1	1 609 280 477	Compression Spring .	49,00					
91	1	1 607 A35 0MA	Battery Pack GBA 18V	0,00					
101	10	2 609 110 201	Torx Flat-Head Screw 3x16	28,00					
107	1	2 603 421 229	Countersunk-Head Screw	50,00					
653	1	2 607 226 283	Fast Charger UK GAL	0,00					
653	1	2 607 226 537	Fast Charger IND GAL	0,00					
802	1	1 607 022 66N	DC motor 18V .	1.094,00					
802/1	1	1 607 000 CZ1	Carbon-Brush Set .	184,00					
802/2	1	2 609 199 049	Sealing cap .	264,00					
808	1	1 601 11A 6YN	Nameplate .	0,00					
891	1	1 607 A35 0JR	Battery Pack GBA 18V	0,00					
891	1	1 607 A35 0MA	Battery Pack GBA 18V	0,00					

Please observe: Repairing, modifying and testing of electro-tools are to be performed professionally.The safety regulations according to IEC, EN, VDE, AFNOR and other regulations of the individual countries are to be observed. Subject to change.
This price list supersedes all previous edition. Prices are subjected to change without any prior notice.

BOSCH Power Tools	Cordless Drill Driver	Model GSR 185-LI 3 601 JK3 080 | BO

3 601 JK3 000
Issue / Stand 22-02-08 **Fig./Abb. 1**

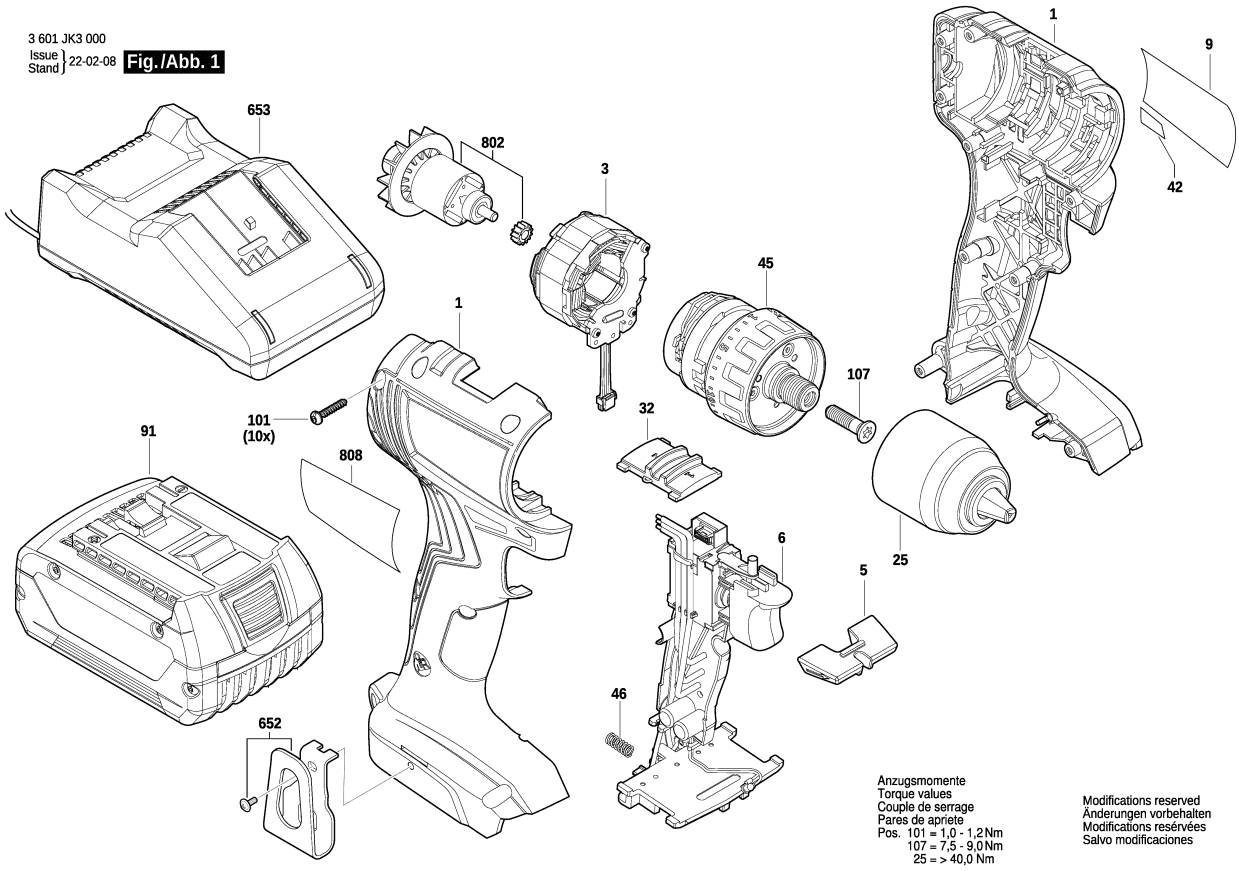

Model: 3 601 JK3 080 = 18 | Date:

Item	Pc	Order no.	Description	LP IN INR	Item	Pc	Order no.	Description	LP IN INR
1	1	1 605 806 62H	Housing .	545,00					
3	1	1 619 P15 696	Stator .	764,00					
5	1	1 600 A01 Z04	Changeover Lever .	94,00					
6	1	2 607 202 513	Electronics Module .	1.510,00					
9	1	1 601 11C 4DC	Manufacturer's nameplate .						
25	1	1 600 A02 7W8	Keyless Chuck .	1.342,00					
32	1	1 600 A01 2MM	Switchover Unit .	245,00					
42	1	1 601 11C 49H	Sticker .						
45	1	1 600 A01 ZT8	Gear Box .	1.139,00					
46	1	1 609 280 477	Compression Spring .	49,00					
91	1	1 607 A35 0MN	Battery Pack GBA 18V						
91	1	1 607 A35 0LA	Battery Pack .						
91	1	1 607 A35 0V8	Battery Pack GBA 18V						
91	1	1 607 A35 0M7	Battery Pack TWN GBA						
101	10	2 609 110 201	Torx Flat-Head Screw 3x16	28,00					
107	1	2 603 421 229	Countersunk-Head Screw	50,00					
652	1	1 600 A02 7W3	Clip .	103,00					
653	1	2 607 226 281	Fast Charger EU GAL						
653	1	2 607 226 289	Fast Charger LAM						
653	1	2 607 226 537	Fast Charger IND GAL						
653	1	2 607 226 283	Fast Charger UK GAL						
802	1	1 607 000 EC2	Rotor .	666,00					
808	1	1 601 11A 956	Nameplate .						

Please observe: Repairing, modifying and testing of electro-tools are to be performed professionally.The safety regulations according to IEC, EN, VDE, AFNOR and other regulations of the individual countries are to be observed. Subject to change.
This price list supersedes all previous edition. Prices are subjected to change without any prior notice.

BOSCH Power Tools	Cordless Screw Driver	Model Bosch GO 3 601 JH2 280 | BO

3 601 JH2 200
Issue / Stand 23-09-20 Fig./Abb. 1

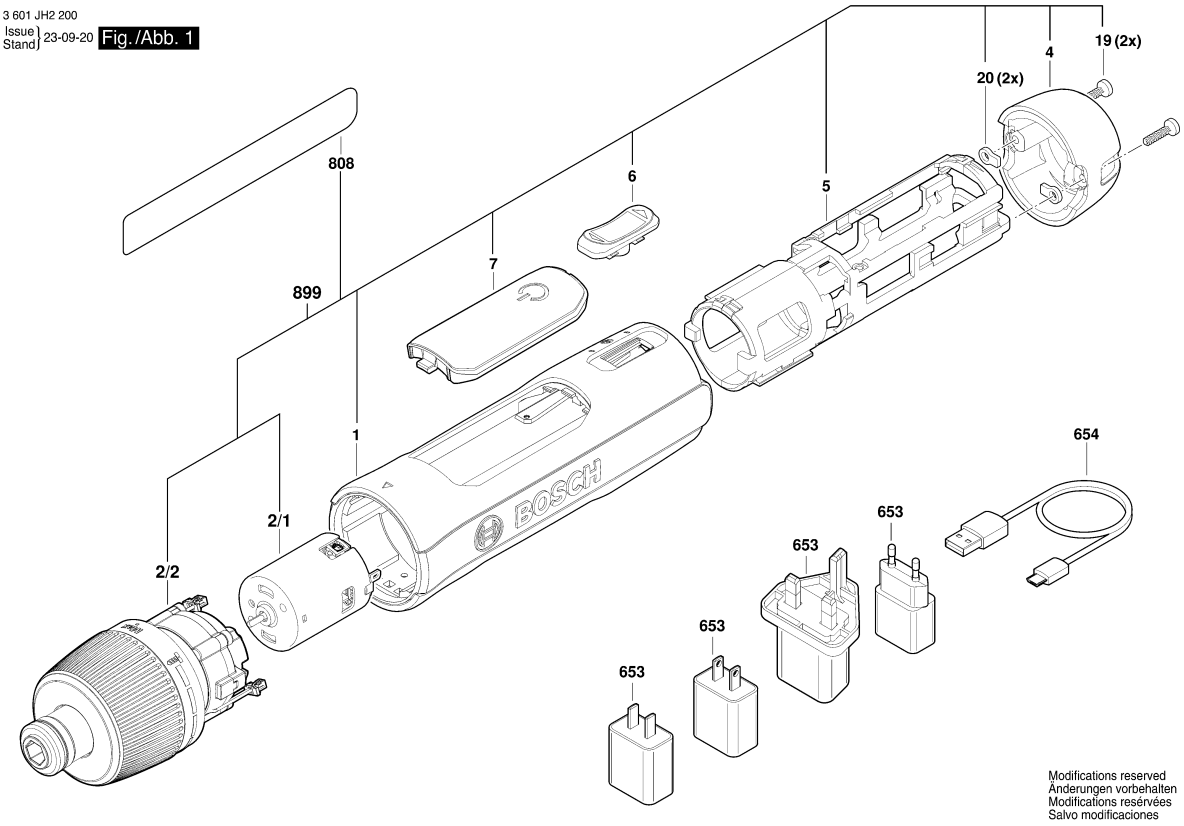

Model: 3 601 JH2 280 = 3.6 | Date:

Item	Pc	Order no.	Description	LP IN INR	Item	Pc	Order no.	Description	LP IN INR
1	1	1 605 806 5W7	Housing .	307,00					
2	1	1 600 A01 B9G	drive module .	1.365,00					
2/1	1	1 607 022 66W	DC motor .	810,00					
2/2	1	1 600 A02 GE3	Planetary Gear Train .						
4	1	1 600 A02 716	Cell Cover .						
5	1	1 605 806 5Y1	Cell Cover .	217,00					
6	1	1 600 A01 B9J	Cell cluster .	299,00					
7	1	1 600 A01 C8X	Change-Over Switch .	100,00					
19	2	2 609 111 496	Screw .	36,00					
20	2	1 600 A01 M4B	Clip .	79,00					
653	1	1 607 000 CH1	Charger Asien 230/5V .	318,00					
654	1	1 607 000 DN8	USB cable USB Type A /						
808	1	1 601 11A 75E	Nameplate .						
899	1	1 607 000 EV5	Cordless Screw Driver .						

Please observe: Repairing, modifying and testing of electro-tools are to be performed professionally.The safety regulations according to IEC, EN, VDE, AFNOR and other regulations of the individual countries are to be observed. Subject to change.
This price list supersedes all previous edition. Prices are subjected to change without any prior notice.

BOSCH Power Tools	Cordl Perc Screwdr	Model GSB 180-LI 3 601 JF8 3K0 | BO

3 601 JF8 300
Issue / Stand } 17-12-13 Fig./Abb. 1

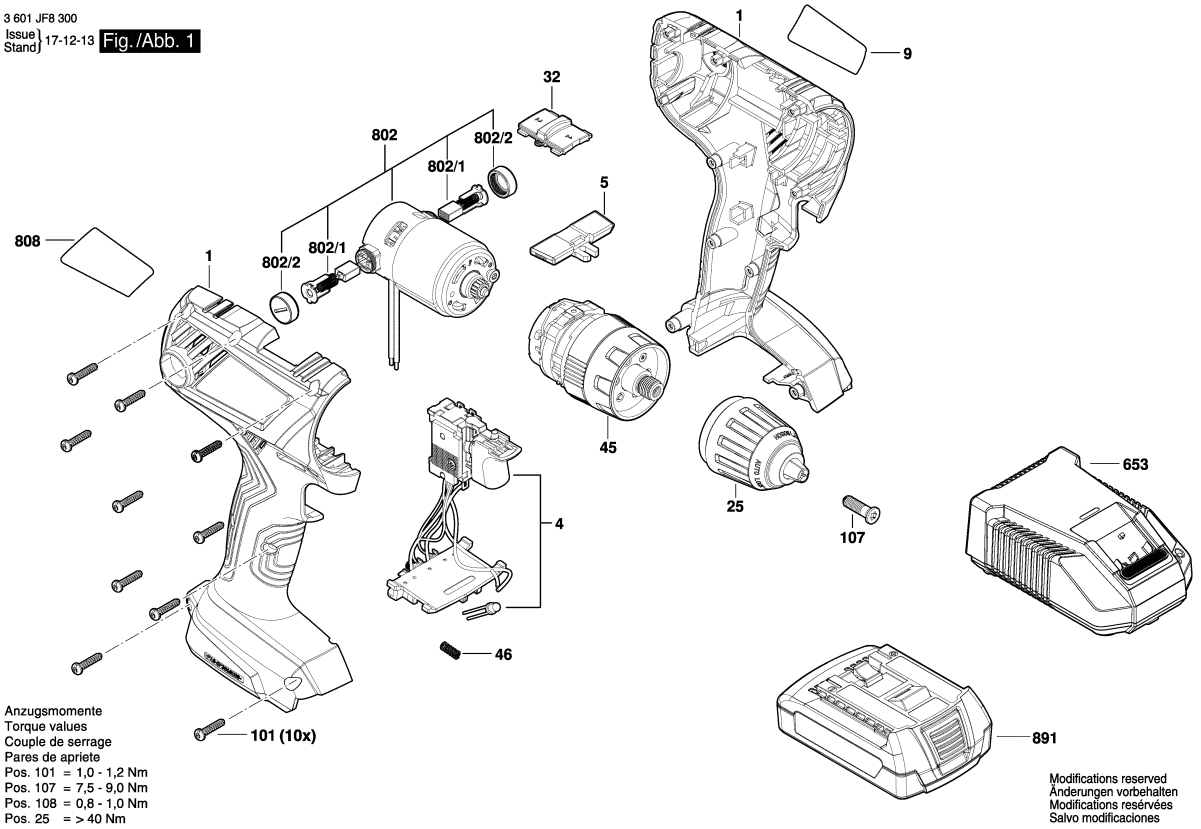

Anzugsmomente
Torque values
Couple de serrage
Pares de apriete
Pos. 101 = 1,0 - 1,2 Nm
Pos. 107 = 7,5 - 9,0 Nm
Pos. 108 = 0,8 - 1,0 Nm
Pos. 25 = > 40 Nm

Modifications reserved
Änderungen vorbehalten
Modifications reservées
Salvo modificaciones

Model: 3 601 JF8 3K0 = 18 | Date:

Item	Pc	Order no.	Description	LP IN INR	Item	Pc	Order no.	Description	LP IN INR
1	1	2 609 101 741	Housing .	534,00					
4	1	2 607 202 330	Electronics Module .	1.090,00					
5	1	2 609 101 484	Adjusting lever .	36,00					
9	1	2 609 138 608	Manufacturer's nameplate						
25	1	2 609 112 190	Keyless Chuck .	670,00					
32	1	2 609 199 812	Switchover Unit .	97,00					
45	1	1 600 A00 P90	Gear Box .	1.669,00					
46	1	1 609 280 477	Compression Spring .	49,00					
101	10	2 609 110 201	Torx Flat-Head Screw 3x16	28,00					
107	1	2 603 421 229	Countersunk-Head Screw	50,00					
653	1	2 607 226 283	Fast Charger UK GAL						
653	1	2 607 226 537	Fast Charger IND GAL						
802	1	1 607 022 66N	DC motor 18V .	1.094,00					
802/1	1	1 607 000 CZ1	Carbon-Brush Set .	184,00					
802/2	1	2 609 199 049	Sealing cap .	264,00					
808	1	1 601 11A 6YC	Nameplate .						
891	1	1 607 A35 0MA	Battery Pack GBA 18V						
891	1	1 607 A35 0JR	Battery Pack GBA 18V						

Please observe: Repairing, modifying and testing of electro-tools are to be performed professionally.The safety regulations according to IEC, EN, VDE, AFNOR and other regulations of the individual countries are to be observed. Subject to change.
This price list supersedes all previous edition. Prices are subjected to change without any prior notice.

BOSCH Power Tools	Cordless Screw Driver	Model GSB 183-LI 3 601 JK9 1K0 | BO

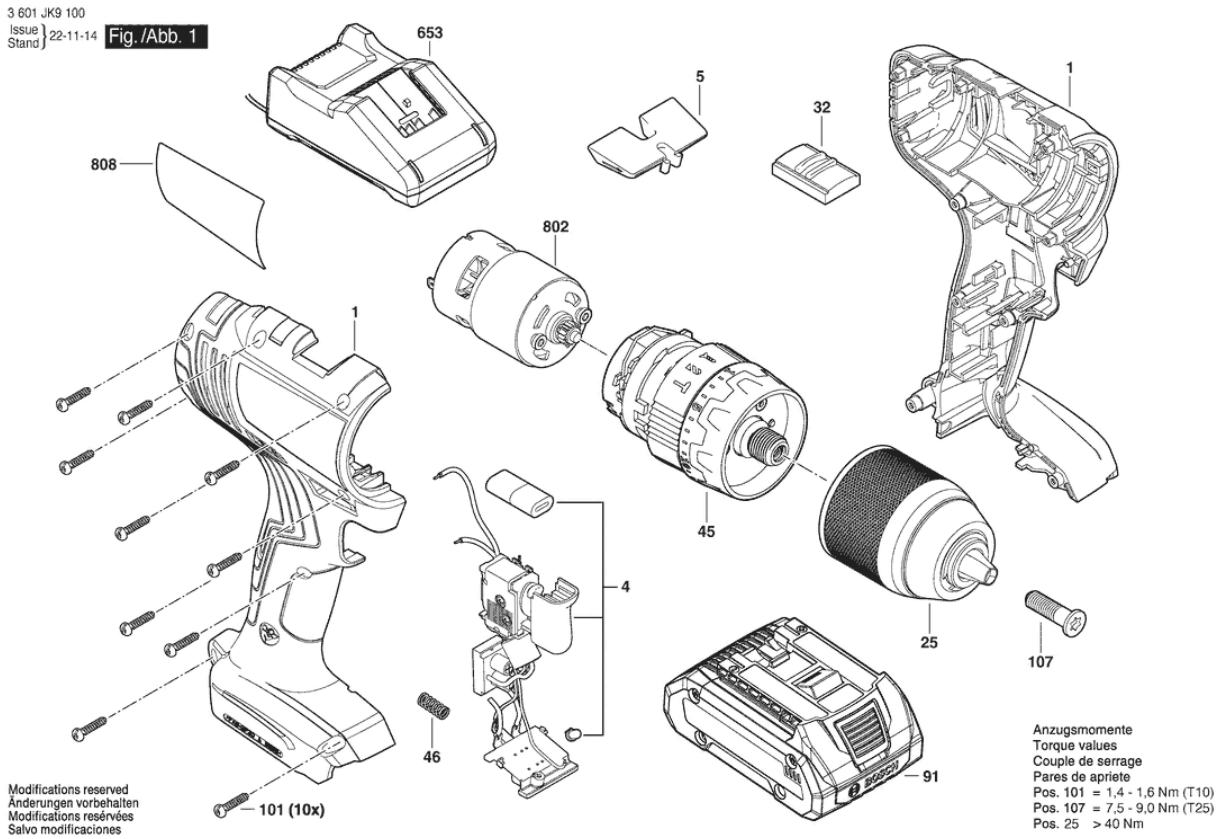

Model: 3 601 JK9 1K0 = 230 | Date:

Item	Pc	Order no.	Description	LP IN INR	Item	Pc	Order no.	Description	LP IN INR
1	1	1 605 806 69J	Housing .	390,00					
4	1	2 607 202 53	Electronics Module.	990,00					
5	1	1 600 A02 6R5	Changeover Lever.	25,00					
25	1	1 600 A02 7W8	Keyless Chuck.	1342,00					
32	1	1 600 A01 2MM	Switchover Unit.	245,00					
45	1	1 600 A02 6R8	Gear Box.	1174,00					
46	1	1 609 280 477	Compression Spring.	49,00					
91	1	1 607 A35 0V8	Battery Pack GBA 18V 2.0AH.						
101	10	2 609 110 201	Torx Flat-Head Screw 3X16.	28,00					
107	1	2 603 421 229	Countersunk-Head Screw M6X23 LEFTHAND THREADS.	50,00					
653	1	2 607 226 281	Fast Charger EU GAL 18V-20 220V-240V 12V-18V 2A						
653	1	2 607 226 283	Fast Charger UK GAL 18V-20 220-240V / 2A / 12-18V						
802	1	1 607 000 E7V	Motor assembly .						
808	1	1 601 11A 9YY	Nameplate .						

Please observe: Repairing, modifying and testing of electro-tools are to be performed professionally.The safety regulations according to IEC, EN, VDE, AFNOR and other regulations of the individual countries are to be observed. Subject to change.
This price list supersedes all previous edition. Prices are subjected to change without any prior notice.

BOSCH Power Tools	Impact Wrench	Model GDS 250-LI 3 601 JG6 1K0 | BO

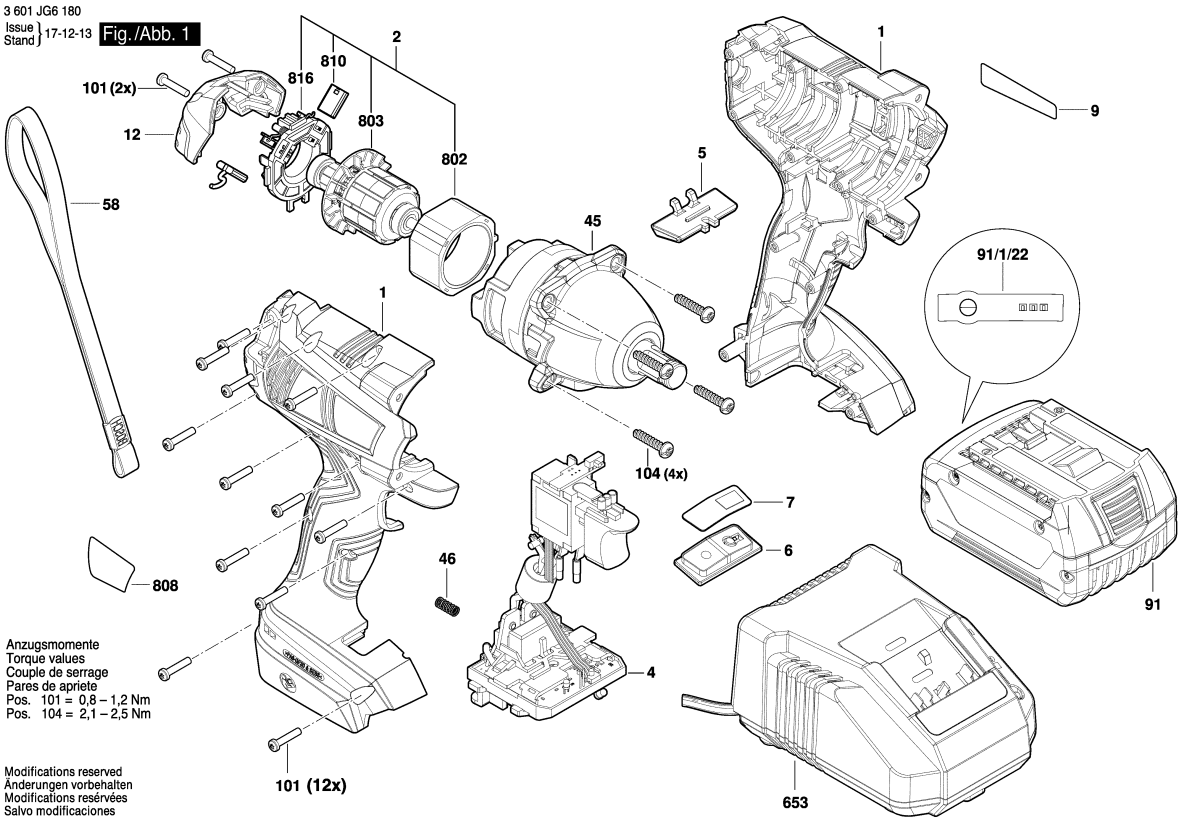

Model: 3 601 JG6 1K0 = 18 | Date:

Item	Pc	Order no.	Description	LP IN INR
1	1	2 609 101 560	Housing .	636,00
2	1	2 609 120 731	DC motor .	1.933,00
4	1	2 609 199 892	Electronics Module .	1.811,00
5	1	2 609 101 784	Adjusting lever .	30,00
6	1	2 609 101 785	Button .	30,00
7	1	2 609 138 369	Label .	
9	1	2 609 138 417	Manufacturer's nameplate	
12	1	2 609 101 783	Cover .	30,00
45	1	2 609 199 838	Gear Box .	2.702,00
45/13	1	2 609 111 873	Washer .	50,00
45/30	1	2 609 112 012	Jack Shaft .	435,00
45/31	2	2 609 110 332	Ball .	28,00
45/32	1	2 609 111 582	Washer .	71,00
45/33	1	2 609 112 003	Spring .	120,00
45/34	1	2 609 111 555	Striker .	506,00
45/36	1	2 609 110 320	Washer .	58,00
45/37	1	2 609 170 206	Damper .	84,00
45/40	1	2 609 111 519	Ring Gear .	154,00
45/41	2	2 609 111 560	Planet Gear .	256,00
45/42	2	2 609 112 105	Dowel pin .	28,00
45/50	1	2 609 112 002	Washer .	113,00
45/52	1	2 609 112 104	Washer .	110,00
45/53	1	2 609 170 274	O-Ring .	110,00
45/55	1	2 609 170 243	O-Ring .	30,00

Item	Pc	Order no.	Description	LP IN INR
45/810	1	2 609 199 938	Front Housing .	617,00
45/822	1	1 600 A01 4Z3	Coupling Half .	474,00
45/835	1	2 609 112 136	steel ball .	52,00
45/854	1	2 609 199 937	Flange Housing .	104,00
45/890	1	1 600 A00 2NE	Grease Tube 45 ml .	1.427,00
46	1	1 609 280 477	Compression Spring .	49,00
58	1	2 609 100 301	Strap .	31,00
91	1	1 607 A35 0M0	Battery Pack GBA 18V	
91/1/22	1	2 601 115 537	Sticker .	
101	14	2 609 110 201	Torx Flat-Head Screw 3x16	28,00
104	4	2 609 110 327	Screw .	30,00
653	1	2 607 226 251	Fast Charger EU GAL	
653	1	2 607 226 537	Fast Charger IND GAL	
653	1	2 607 226 253	Fast Charger GB GAL	
802	1	1 600 A00 0E0	Stator .	580,00
803	1	1 600 A01 2PA	Rotor .	800,00
808	1	1 600 A01 23X	Nameplate .	
810	1	1 604 321 174	Carbon-Brush Set .	264,00
816	1	1 600 A00 P98	Brush Holder .	424,00

Please observe: Repairing, modifying and testing of electro-tools are to be performed professionally.The safety regulations according to IEC, EN, VDE, AFNOR and other regulations of the individual countries are to be observed. Subject to change.
This price list supersedes all previous edition. Prices are subjected to change without any prior notice.

3 601 JG6 180
Issue / Stand 18-01-29 Fig./Abb. 2

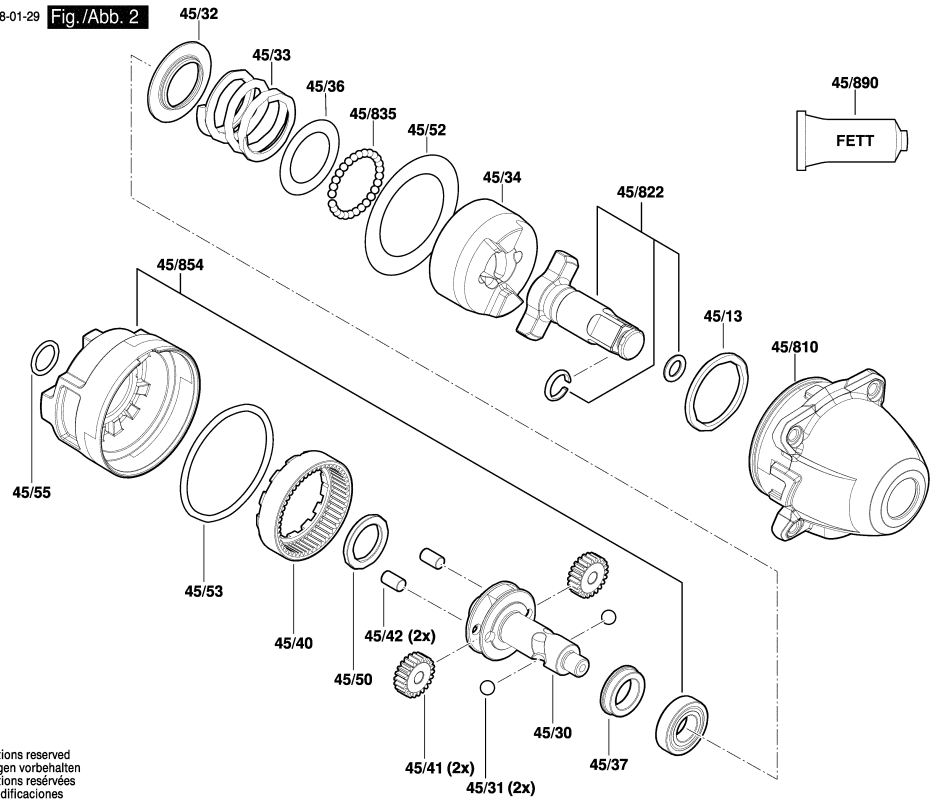

Modifications reserved
Änderungen vorbehalten
Modifications resérvées
Salvo modificaciones

Model: 3 601 JG6 1K0 = 18	Date:

Item	Pc	Order no.	Description	LP IN INR	Item	Pc	Order no.	Description	LP IN INR

Please observe: Repairing, modifying and testing of electro-tools are to be performed professionally.The safety regulations according to IEC, EN, VDE, AFNOR and other regulations of the individual countries are to be observed. Subject to change.
This price list supersedes all previous edition. Prices are subjected to change without any prior notice.

BOSCH Power Tools	Impact Wrench	Model GDS 18 V-EC 250 3 601 JD8 1F0 | BO

3 601 JD8 180
Stand } ~~18-07~~
Issue } 18-11-27

Fig./Abb. 1

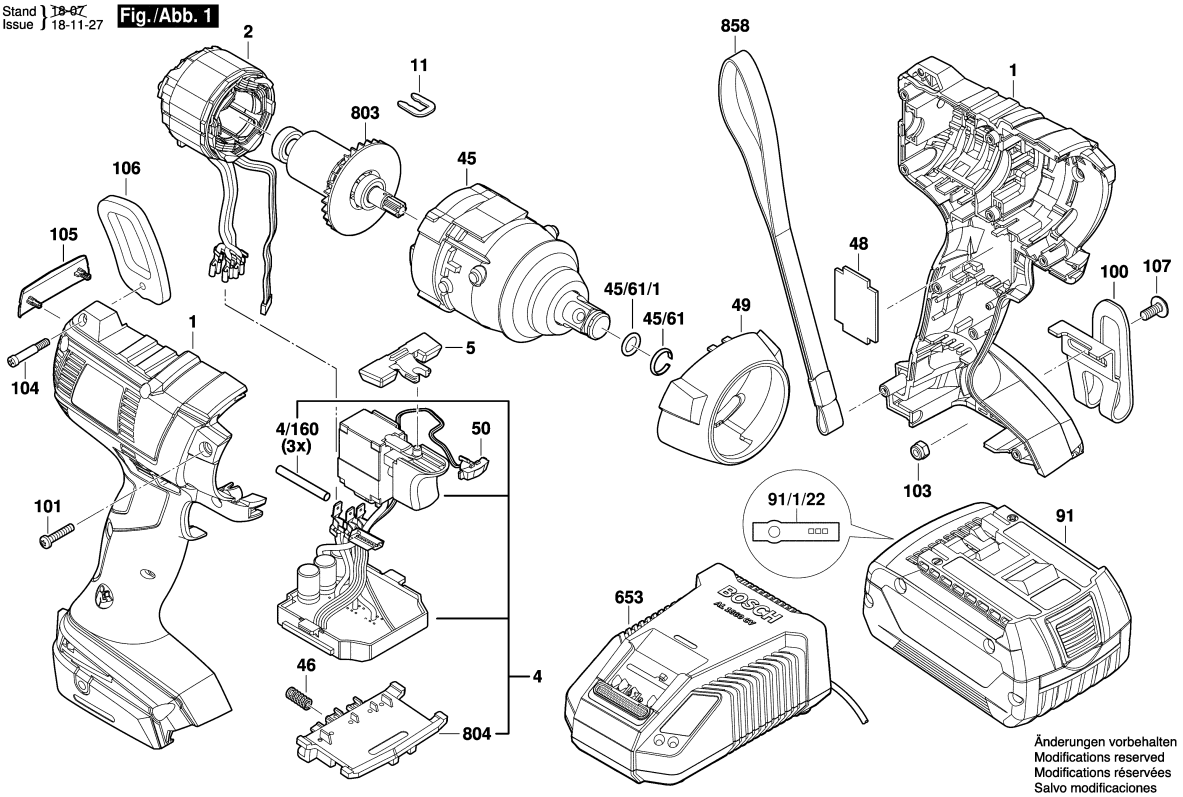

Model: 3 601 JD8 1F0 = 18/220 | Date:

Item	Pc	Order no.	Description	LP IN INR
1	1	2 609 101 346	Housing .	719,00
2	1	1 619 P08 594	Stator .	1.231,00
4	1	1 600 A00 19T	Electronics Module .	3.855,00
4/160	3	1 619 P15 186	Shrinkable Tube .	30,00
5	1	2 609 101 067	Adjusting lever .	28,00
11	1	2 609 110 838	Clip .	28,00
45	1	2 609 199 585	Gear Box .	3.232,00
45/20	1	2 609 111 555	Striker .	506,00
45/21	2	2 609 110 332	Ball .	28,00
45/23	1	2 609 110 320	Washer .	58,00
45/24	1	2 609 111 711	Compression Spring .	170,00
45/25	1	2 609 111 582	Washer .	71,00
45/26	1	2 609 170 206	Damper .	84,00
45/27	1	2 609 111 556	Jack Shaft .	796,00
45/28	1	2 609 111 873	Washer .	50,00
45/30	1	2 609 111 851	Washer .	52,00
45/40	2	2 609 111 560	Planet Gear .	256,00
45/41	2	2 609 112 105	Dowel pin .	28,00
45/42	1	2 609 111 519	Ring Gear .	154,00
45/54	1	2 609 170 156	O-Ring .	66,00
45/56	1	2 609 111 841	Washer .	172,00
45/57	1	2 609 170 204	Seal Ring .	62,00
45/60	1	2 609 111 518	Coupling Half .	857,00
45/61	1	2 609 112 053	Clip Fastener .	28,00

Item	Pc	Order no.	Description	LP IN INR
45/61/1	1	2 609 170 273	Rubber Ring .	40,00
45/822	1	2 609 112 136	steel ball .	52,00
45/851	1	2 609 199 972	Gear Housing .	963,00
45/852	1	2 609 199 973	Housing .	395,00
45/890	1	1 600 A00 2NE	Grease Tube 45 ml .	1.427,00
46	1	1 609 280 477	Compression Spring .	49,00
48	1	2 609 136 324	Protection .	28,00
49	1	2 609 170 222	Protective Ring .	203,00
50	1	2 609 101 083	Lens .	28,00
91	1	1 607 A35 0M0	Battery Pack GBA 18V	
91/1/22	1	2 601 115 537	Sticker .	
100	1	2 609 111 584	Clip .	133,00
101	9	2 609 110 201	Torx Flat-Head Screw 3x16	28,00
103	2	2 609 110 835	Nut .	28,00
104	1	2 609 111 446	Pan head screw .	28,00
105	1	2 609 101 393	Color clip .	44,00
106	1	2 609 170 196	Protector .	53,00
107	1	2 609 110 834	Screw .	61,00
653	1	2 607 225 321	Charger EU 230/14,4-18V,	4.633,00
653	1	2 607 225 329	Fast Charger RC	4.612,00
803	1	2 609 199 757	Rotor 18V .	1.658,00
804	1	1 609 280 478	Contact retainer .	453,00
858	1	2 609 100 301	Strap .	31,00

Please observe: Repairing, modifying and testing of electro-tools are to be performed professionally.The safety regulations according to IEC, EN, VDE, AFNOR and other regulations of the individual countries are to be observed. Subject to change.
This price list supersedes all previous edition. Prices are subjected to change without any prior notice.

3 601 JD8 180
Stand } ~~D-12~~
Issue } 15-03-14

Fig./Abb. 2

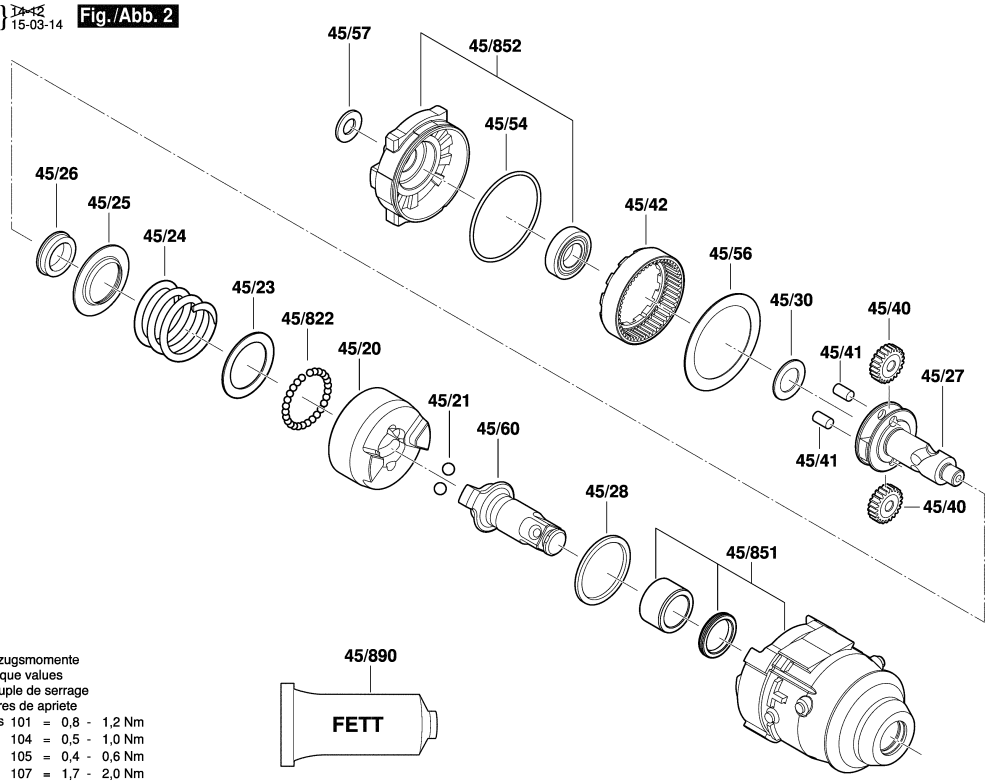

Anzugsmomente
Torque values
Couple de serrage
Pares de apriete

Pos				
101	=	0,8	-	1,2 Nm
104	=	0,5	-	1,0 Nm
105	=	0,4	-	0,6 Nm
107	=	1,7	-	2,0 Nm

Änderungen vorbehalten
Modifications reserved
Modifications réservées
Salvo modificaciones

Model: 3 601 JD8 1F0 = 18/220 | Date:

Item	Pc	Order no.	Description	LP IN INR	Item	Pc	Order no.	Description	LP IN INR

Please observe: Repairing, modifying and testing of electro-tools are to be performed professionally.The safety regulations according to IEC, EN, VDE, AFNOR and other regulations of the individual countries are to be observed. Subject to change.
This price list supersedes all previous edition. Prices are subjected to change without any prior notice.

BOSCH Power Tools	Impact Wrench	Model GDS 18V-200 3 601 JJ2 380 | BO

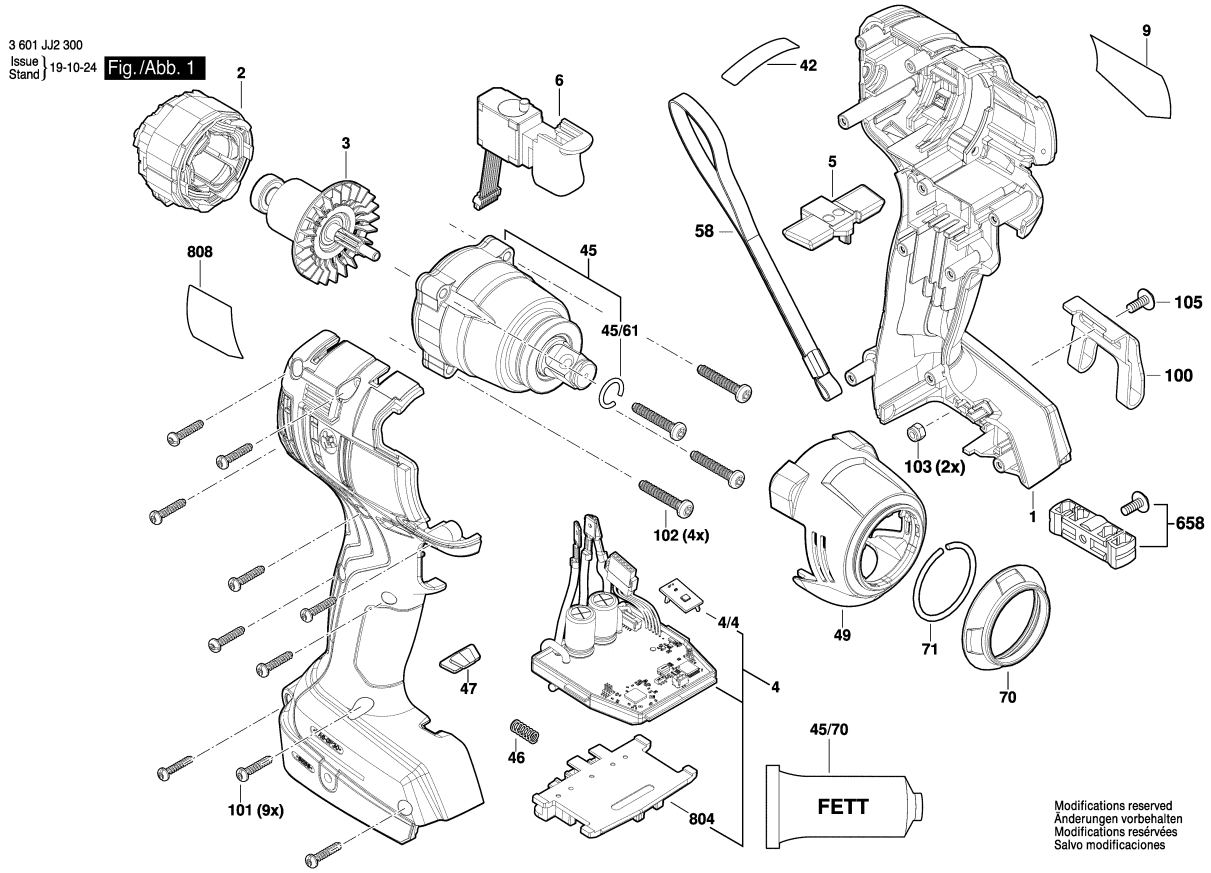

Model: 3 601 JJ2 380 = 18 | Date:

Item	Pc	Order no.	Description	LP IN INR
1	1	1 605 806 5Y4	Housing .	548,00
2	1	1 619 P15 347	Stator .	1.240,00
3	1	1 619 P14 405	Rotor .	1.013,00
4	1	1 607 233 5LH	Electronics Module .	2.826,00
4/4	1	1 607 503 839	Printed Circuit Board .	306,00
5	1	1 600 A01 N9M	Changeover Lever .	180,00
6	1	2 607 202 501	Switch .	564,00
9	1	1 601 11C 32H	Manufacturer's nameplate .	
42	1	1 601 11C 37H	Sticker .	29,00
45	1	1 600 A01 C6F	Gear Box .	2.935,00
45/61	1	0 618 800 045	Retaining ring .	0,00
45/70	1	1 600 A00 2NE	Grease Tube 45 ml .	1.427,00
46	1	1 609 280 477	Compression Spring .	49,00
47	1	1 600 A00 0LE	Lens .	15,00
49	1	1 600 A00 J37	Cover .	235,00
58	1	2 609 100 301	Strap .	31,00
70	1	1 600 A01 1DL	Protective Cap .	193,00
71	1	1 604 601 037	Retaining ring .	158,00
100	1	2 609 111 584	Clip .	133,00
101	9	2 609 110 201	Torx Flat-Head Screw 3x16	28,00
102	4	0 618 800 04W	Torx Flat-Head Screw .	172,00
103	2	2 609 110 835	Nut .	28,00
105	1	2 609 110 834	Screw .	61,00
658	1	2 609 199 748	Bit holder .	81,00
804	1	1 609 280 820	Contact retainer 18V .	279,00
808	1	1 601 11A 8RK	Nameplate .	

Please observe: Repairing, modifying and testing of electro-tools are to be performed professionally.The safety regulations according to IEC, EN, VDE, AFNOR and other regulations of the individual countries are to be observed. Subject to change.
This price list supersedes all previous edition. Prices are subjected to change without any prior notice.

3 601 JJ2 300
Issue Stand 19-10-24 Fig./Abb. 2

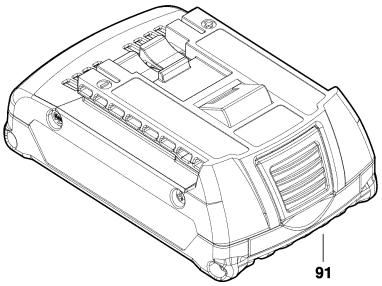

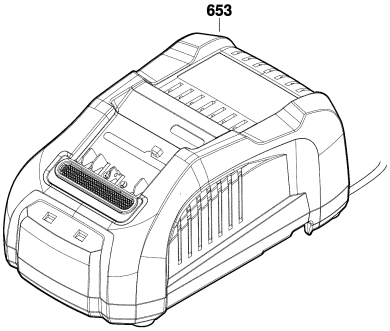

Modifications reserved
Änderungen vorbehalten
Modifications resérvées
Salvo modificaciones

Model: 3 601 JJ2 380 = 18 | Date: LP IN INR

Item	Pc	Order no.	Description	LP IN INR	Item	Pc	Order no.	Description	LP IN INR

Please observe: Repairing, modifying and testing of electro-tools are to be performed professionally.The safety regulations according to IEC, EN, VDE, AFNOR and other regulations of the individual countries are to be observed. Subject to change.
This price list supersedes all previous edition. Prices are subjected to change without any prior notice.

BOSCH Power Tools	Impact Wrench	Model GDS 18V-1050 H 3 601 JJ8 5L0 | BO

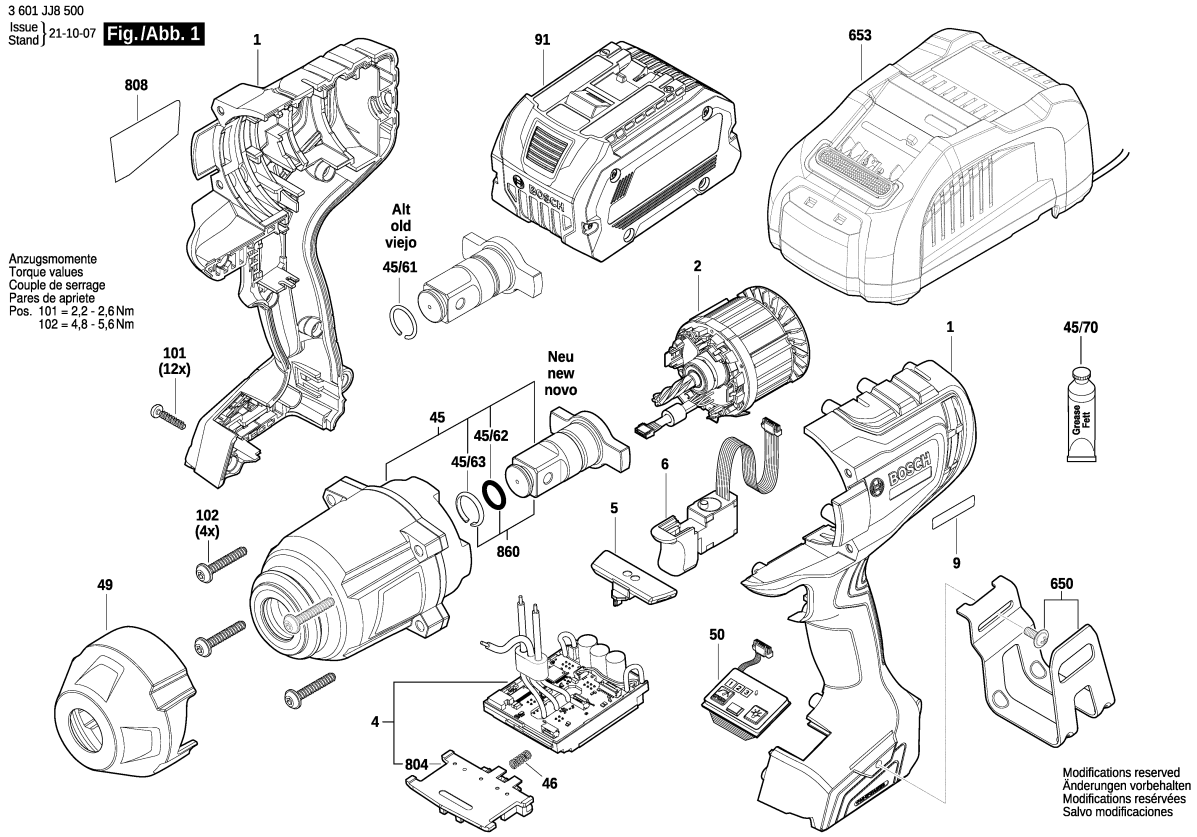

Model: 3 601 JJ8 5L0 = 18 | Date:

Item	Pc	Order no.	Description	LP IN INR	Item	Pc	Order no.	Description	LP IN INR
1	1	1 605 806 64U	Housing .	1.550,00					
2	1	1 607 022 69Z	DC motor .	6.090,00					
4	1	1 607 233 5LG	Electronic Module .	6.294,00					
5	1	1 600 A01 P3K	Changeover Lever .	304,00					
6	1	2 607 202 501	Switch .	564,00					
9	1	1 601 11C 3U5	Manufacturer's nameplate .						
45	1	1 600 A01 RJ5	Gear Box .	8.539,00					
45/62	1	1 600 210 09M	O-Ring .						
45/63	1	1 604 601 040	Retaining ring .						
45/70	1	1 600 A00 2NE	Grease Tube 45 ml .	1.427,00					
46	1	1 609 280 477	Compression Spring .	49,00					
49	1	1 600 A01 R1M	Cap .	665,00					
50	1	1 607 233 5MR	Electronic Module .	1.366,00					
91	1	2 607 337 069	Battery Pack BBS MR,						
101	12	2 603 490 023	Torx Oval-Head Screw	30,00					
102	4	1 603 435 098	Torx Oval-Head Screw	268,00					
650	1	1 600 A02 3G7	Clip .	314,00					
653	1	2 607 226 537	Fast Charger IND GAL						
804	1	1 609 280 820	Contact retainer 18V .	279,00					
808	1	1 600 A02 499	Type Label .						
860	1	1 600 A02 6YU	Coupling Half .						

Please observe: Repairing, modifying and testing of electro-tools are to be performed professionally.The safety regulations according to IEC, EN, VDE, AFNOR and other regulations of the individual countries are to be observed. Subject to change.
This price list supersedes all previous edition. Prices are subjected to change without any prior notice.

BOSCH Power Tools	Impact Wrench	Model GDS 18V-400 3 601 JK0 080 | BO

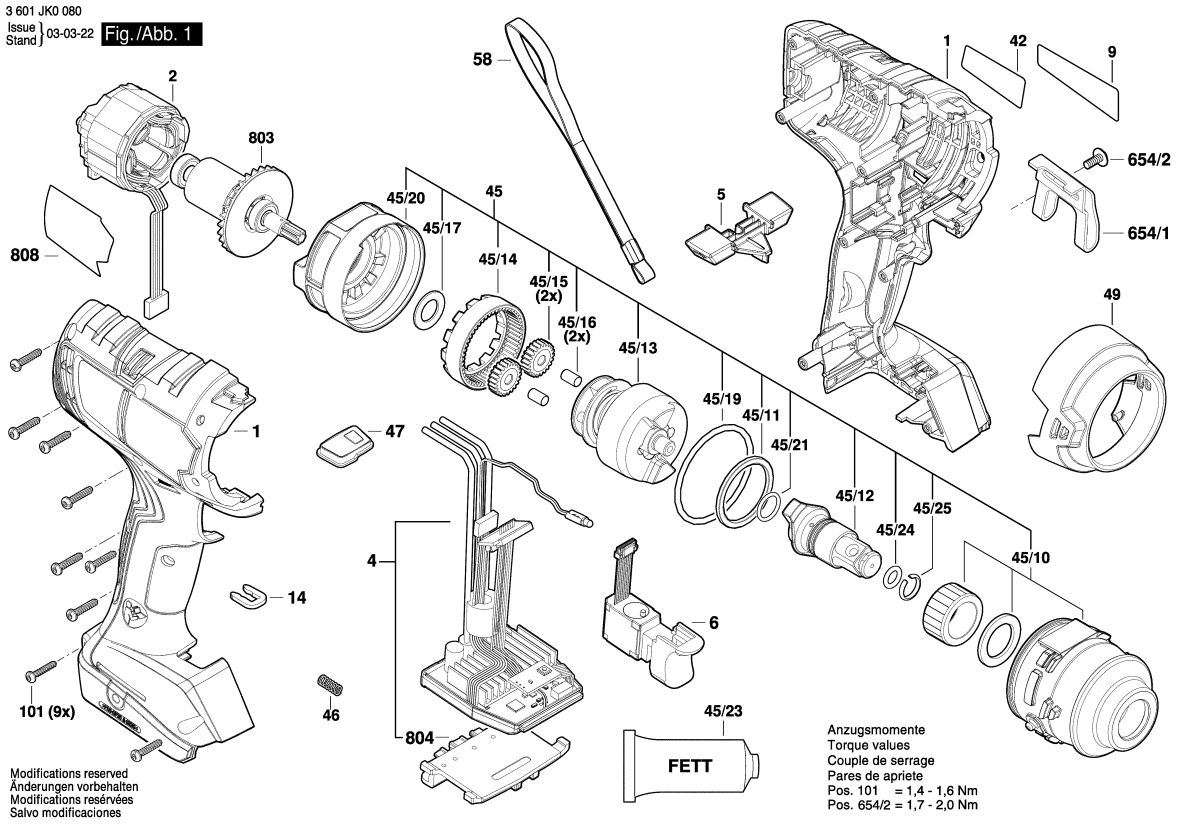

Model: 3 601 JK0 080 = 18 | Date:

Item	Pc	Order no.	Description	LP IN INR
1	1	1 600 A02 4SC	Housing Assembly .	496,00
2	1	1 619 P15 409	Stator .	781,00
4	1	1 600 A02 3VS	Printed-Board Assembly .	4.060,00
5	1	1 600 A01 YV1	Changeover Lever .	118,00
6	1	2 607 202 509	Switch .	1.156,00
9	1	1 607 000 E1R	Manufacturer's nameplate	
14	1	2 609 110 537	Clip .	44,00
42	1	1 601 11C 3ND	Sticker .	0,00
45	1	1 600 A01 PN1	Gear Box .	2.726,00
45/10	1	1 605 806 61K	Gear Housing .	606,00
45/11	1	1 600 A01 R7G	Washer .	44,00
45/12	1	1 600 A01 ZK6	Coupling Half .	627,00
45/13	1	1 600 A01 ZK8	Jack Shaft .	1.264,00
45/14	1	1 600 A02 4SG	Ring Gear .	349,00
45/15	2	2 609 111 560	Planet Gear .	256,00
45/16	2	2 609 112 105	Dowel pin .	28,00
45/17	1	2 609 111 851	Washer .	52,00
45/19	1	2 609 170 274	O-Ring .	110,00
45/20	1	1 600 A02 3VV	Flange Housing .	323,00
45/21	1	2 609 170 243	O-Ring .	30,00
45/23	1	1 600 A00 2NE	Grease Tube 45 ml .	1.427,00
45/24	1	2 609 170 273	Rubber Ring .	40,00
45/25	1	2 609 112 053	Clip Fastener .	28,00
46	1	1 609 280 477	Compression Spring .	49,00

Item	Pc	Order no.	Description	LP IN INR
47	1	1 600 A02 3VT	Button .	149,00
49	1	1 600 A01 YB7	Rubber Cap .	158,00
58	1	2 609 100 301	Strap .	31,00
91	1	1 607 A35 0MA	Battery Pack GBA 18V	
91	1	2 607 337 069	Battery Pack BBS MR,	
101	9	2 609 110 618	Screw .	29,00
653	1	2 607 226 537	Fast Charger IND GAL	
653	1	2 607 226 267	Fast Charger CN GAL	
653	1	2 607 226 253	Fast Charger GB GAL	
653	1	2 607 226 251	Fast Charger EU GAL	
654/1	1	2 609 111 584	Clip .	133,00
654/2	1	2 609 110 834	Screw .	61,00
803	1	1 600 A01 RX5	Rotor .	1.028,00
804	1	1 609 280 478	Contact retainer .	453,00
808	1	1 601 11A 754	Type Label .	

Please observe: Repairing, modifying and testing of electro-tools are to be performed professionally.The safety regulations according to IEC, EN, VDE, AFNOR and other regulations of the individual countries are to be observed. Subject to change.
This price list supersedes all previous edition. Prices are subjected to change without any prior notice.

3 601 JK0 080
Issue Stand } 21-02-18 Fig./Abb. 2

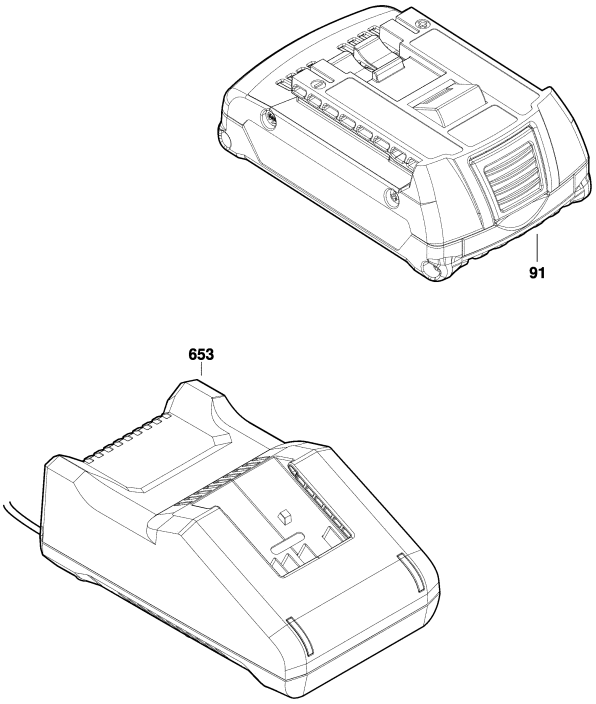

Modifications reserved
Änderungen vorbehalten
Modifications resérvées
Salvo modificaciones

Model: 3 601 JK0 080 = 18	Date:

Item	Pc	Order no.	Description	LP IN INR	Item	Pc	Order no.	Description	LP IN INR

Please observe: Repairing, modifying and testing of electro-tools are to be performed professionally.The safety regulations according to IEC, EN, VDE, AFNOR and other regulations of the individual countries are to be observed. Subject to change.
This price list supersedes all previous edition. Prices are subjected to change without any prior notice.

BOSCH Power Tools	Impact Wrench	Model GDS 18V-1600 HC 3 601 JM1 080 | BO

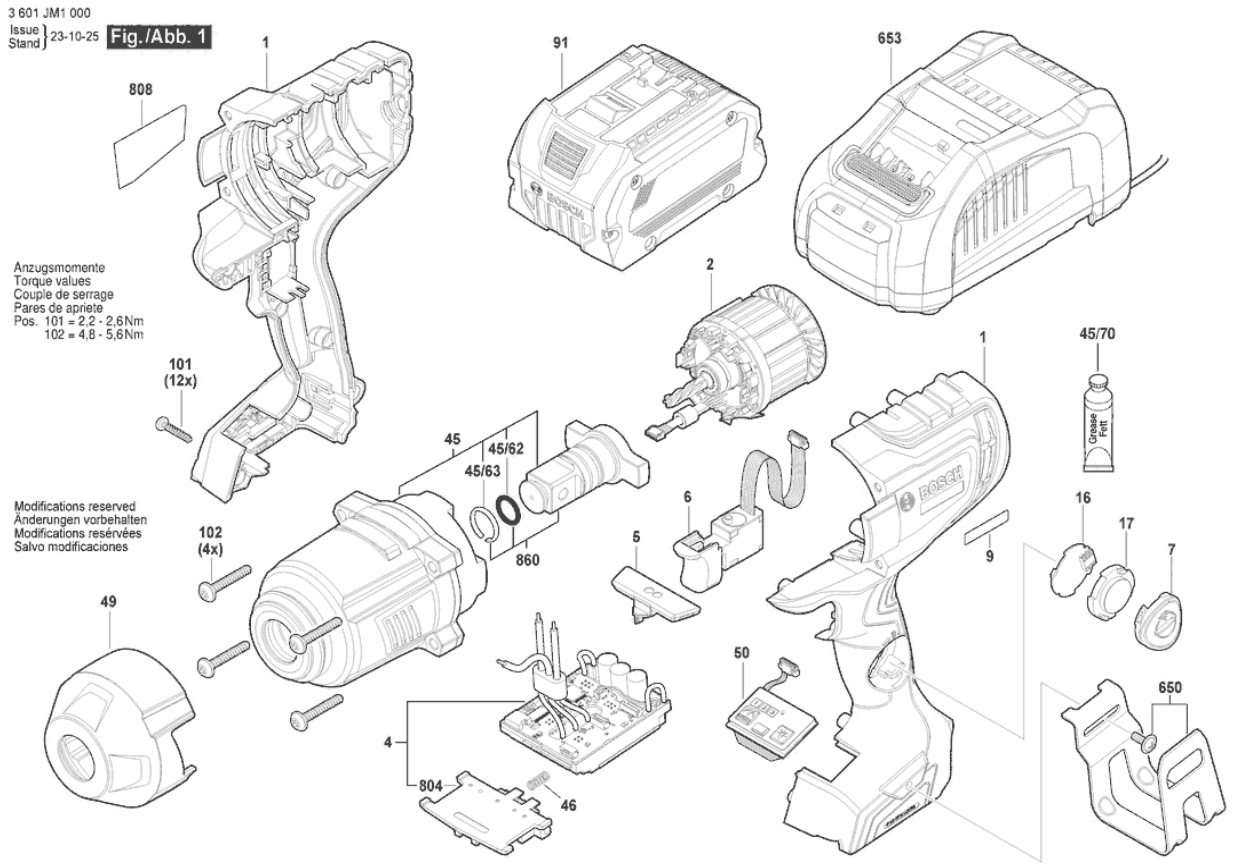

Model: 3 601 JM1 080 | Date:

Item	Pc	Order no.	Description	LP IN INR
1	1	1 605 806 5YH	Housing .	1591,00
2	1	1 607 022 69Z	DC motor.	6090,00
4	1	1 607 233 5LG	Electronic Module .	6294,00
5	1	1 600 A01 P3K	Changeover Lever .	304,00
6	1	2 607 202 501	Switch .	564,00
7	1	1 600 A01 TN9	Cover unit.	266,00
9	1	1 601 11A A6B	Manufacturer's nameplate .	
16	1	1 600 A01 6CZ	Electronics Module .	402,00
17	1	1 600 A01 6ML	Cover Panel .	29,00
17	1	1 600 A02 KY7	Cover Panel .	73,00
45	1	1 600 A02 N3J	Gear Box .	8854,00
45/62	1	1 600 210 09M	O-Ring .	60,00
45/63	1	1 604 601 040	Retaining ring .	66,00
45/70	1	1 600 A00 2NE	Grease Tube 45 ML .	1427,00
46	1	1 609 280 477	Compression Spring.	49,00
49	1	1 600 A02 H7V	Rubber Cap.	678,00
50	1	1 607 233 5LT	Electronic Module.	1636,00
91	1	1 617 S01 9K0	Battery Pack.	
91	1	2 607 337 069	Battery Pack BBS MR, 18V, 5,0 AH 48 S	
101	1	2 603 490 023	Torx Oval-Head Screw 4X20 .	30,00
102	1	1 603 435 098	Torx Oval-Head Screw M5X40 .	268,00
650	1	1 600 A02 3G7	Hook .	314,00
653	1	2 607 225 937	Charger CN GAL 1880 CV 220V/14,4-18V .	
653	1	2 607 226 267	Fast Charger CN GAL 18V-40.	

Item	Pc	Order no.	Description	LP IN INR
804	1	1 609 280 820	Contact retainer 18V .	279,00
808	1	1 600 A03 1X7	Type Label .	
860	1	1 600 A02 VL4	Coupling Half .	1656,00

Please observe: Repairing, modifying and testing of electro-tools are to be performed professionally.The safety regulations according to IEC, EN, VDE, AFNOR and other regulations of the individual countries are to be observed. Subject to change.
This price list supersedes all previous edition. Prices are subjected to change without any prior notice.

BOSCH Power Tools	Cordless Hammer Drill	Model GBH 180-LI 3 611 J11 0K0 | BO

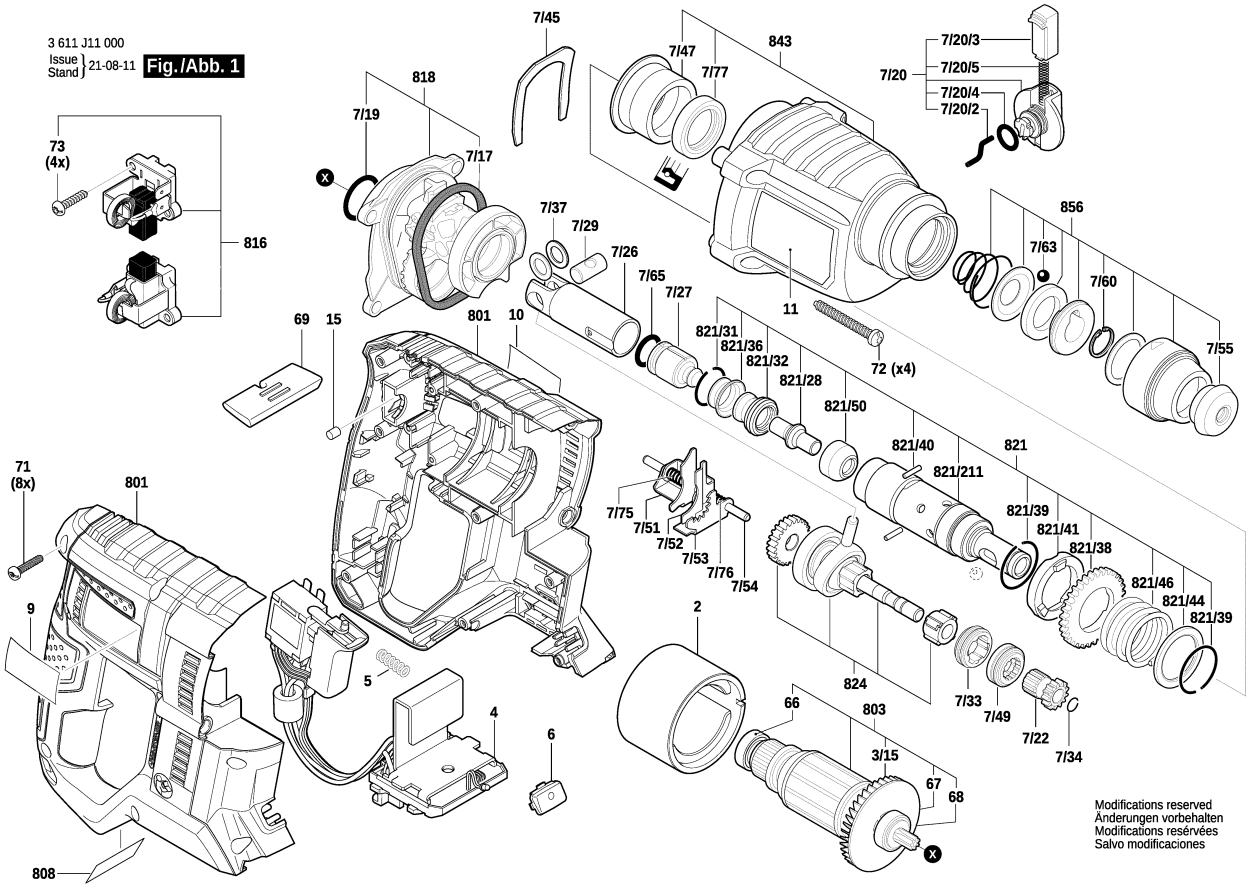

Model: 3 611 J11 0K0 = 18/230 | Date:

Item	Pc	Order no.	Description	LP IN INR
2	1	1 619 P13 742	Field .	437,00
3/15	1	2 610 909 077	axial flow fan .	30,00
4	1	1 600 A00 F9H	Electronic Module .	2.415,00
5	1	2 604 690 055	Compression Spring .	30,00
6	1	1 619 P13 744	Lens .	30,00
7/17	1	1 610 290 108	O-Ring .	43,00
7/19	1	1 610 210 184	O-Ring 22,0x2,5 MM .	30,00
7/20	1	1 612 026 151	Clamp Handle BLACK	68,00
7/20/2	1	1 614 690 009	Driver Pin .	28,00
7/20/3	1	1 612 026 035	Switch Button RED	48,00
7/20/4	1	1 610 210 046	O-Ring 10,5x2,7 MM .	51,00
7/20/5	1	1 614 611 006	Compression Spring .	70,00
7/22	1	1 616 328 053	Gear Sleeve .	87,00
7/26	1	1 618 700 083	Hammer Piston .	158,00
7/27	1	1 618 710 085	Striker .	98,00
7/29	1	1 613 100 034	Piston Pin .	30,00
7/33	1	1 615 820 103	Switching Element .	55,00
7/34	1	1 619 P00 829	Retaining ring .	30,00
7/37	2	1 610 100 016	Guide Disc .	45,00
7/45	1	1 611 016 003	Holding Plate .	57,00
7/47	1	1 610 202 031	Plain bearing .	210,00
7/49	1	1 615 820 104	Switching Element .	86,00
7/51	1	1 610 021 004	Shift Plate .	37,00
7/52	1	1 610 021 006	Shift Plate .	43,00

Item	Pc	Order no.	Description	LP IN INR
7/53	1	1 610 021 005	Shift Plate .	37,00
7/54	1	1 613 023 005	Guide Rod .	44,00
7/55	1	1 610 508 052	Protective Cap .	45,00
7/60	1	1 614 601 077	Spring retaining ring .	56,00
7/63	1	1 903 230 013	Ball DIN 5401-Ø7MM-III-ST	70,00
7/65	1	1 610 210 244	O-Ring 13,0x3,0 MM .	55,00
7/75	1	1 614 643 025	Compression Spring .	30,00
7/76	1	1 614 643 023	Compression Spring .	30,00
7/77	1	1 619 P09 722	Shaft Seal .	80,00
9	1	1 619 P13 760	Manufacturer's nameplate	
10	1	1 619 P13 761	Manufacturer's nameplate	
15	1	2 603 100 056	Damping rubber .	52,00
66	2	1 900 905 029	Ball Bearing 8x22x7 .	39,00
67	1	1 610 905 047	groove ball bearing .	86,00
68	1	1 600 100 037	Plain Washer .	30,00
69	1	1 619 P13 747	Change-Over Switch .	30,00
71	8	2 603 490 023	Torx Oval-Head Screw	30,00
72	4	1 619 P09 645	Torx Oval-Head Screw .	30,00
73	4	1 619 P06 252	Torx Oval-Head Screw .	30,00
651	1	1 613 001 009	Depth-Gauge SW 6x210	167,00
653	1	1 607 A35 0M0	Battery Pack GBA 18V	
653	1	1 607 A35 0B2	Battery Pack 18V 3.0Ah Li	
654	1	2 607 226 251	Fast Charger EU GAL	
654	1	2 607 225 923	Charger GB 230/10,8-18V,	

Please observe: Repairing, modifying and testing of electro-tools are to be performed professionally.The safety regulations according to IEC, EN, VDE, AFNOR and other regulations of the individual countries are to be observed. Subject to change.
This price list supersedes all previous edition. Prices are subjected to change without any prior notice.

3 611 J11 000
Issue / Stand 20-08-19 **Fig./Abb. 2**

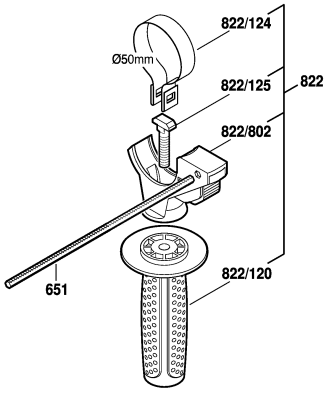

Pos 7/*
Ausrastmoment 28,0 - 8,0 Nm
Slipping point of clutch 28,0 - 8,0 Nm
Couple de glessement 28,0 - 8,0 Nm
Momento de desenclavamiento 28,0 - 8,0 Nm

Anzugsmomente
Torque values
Couple de serrage
Pares de apriete
Pos. 71 = 1,6 - 2,0 Nm
72 = 2,2 - 2,7 Nm
73 = 1,0 - 1,3 Nm
822/12 = 2,7 - 4,7 Nm

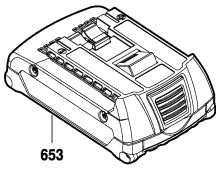

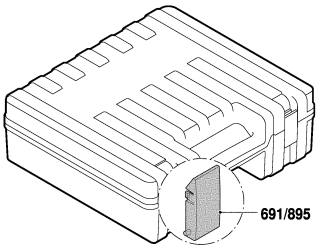

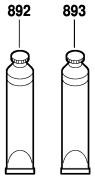

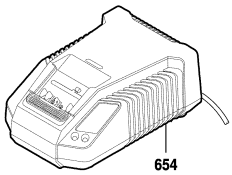

Modifications reserved
Änderungen vorbehalten
Modifications reservées
Salvo modificaciones

Model: 3 611 J11 0K0 = 18/230 | Date:

Item	Pc	Order no.	Description	LP IN INR
654	1	2 607 225 329	Fast Charger RC	4.612,00
654	1	2 607 225 431	Fast Charger RC	
654	1	2 607 225 425	Fast Charger GB	2.896,00
691/895	2	1 619 P14 336	Latch .	91,00
801	1	1 619 P14 446	Motor Housing .	937,00
803	1	1 619 P14 346	Armature .	1.343,00
808	1	1 619 P14 599	Nameplate .	
816	1	1 619 P14 345	Carbon-Brush Set .	266,00
818	1	1 619 P09 616	Intermediate Flange .	894,00
821	1	1 619 P09 617	Hammer Pipe .	1.700,00
821/28	1	1 613 124 084	Striker Pin .	32,00
821/31	1	1 619 P09 816	Retaining ring .	30,00
821/32	1	1 619 P07 426	Rubber Bushing .	93,00
821/36	1	1 610 551 008	Holding Plate .	45,00
821/38	1	1 616 317 084	Cylindrical Gear .	334,00
821/39	2	1 614 601 055	Retaining ring .	30,00
821/40	2	1 613 100 032	Straight Pin .	30,00
821/41	1	1 610 102 072	Ratchet Disc .	111,00
821/44	1	1 610 102 092	Friction Washer .	30,00
821/46	1	1 614 630 003	Compression Spring .	30,00
821/50	1	1 619 P11 562	Guide Bushing .	134,00
821/211	1	1 619 P09 815	Hammer Pipe .	785,00
822	1	1 602 025 08X	Auxiliary Handle .	578,00
822/120	1	1 602 025 07H	Auxiliary Handle .	491,00

Item	Pc	Order no.	Description	LP IN INR
822/124	1	1 611 316 021	Clamping Band Ø50 MM .	70,00
822/125	1	1 613 490 002	T-Head Bolt M8x40 MM .	73,00
822/802	1	1 617 000 475	Support clamp .	81,00
824	1	1 617 000 6BC	Jack Shaft .	1.234,00
843	1	1 619 P09 186	Gear Housing .	715,00
856	1	1 617 000 6D3	Protection Sleeve .	249,00
892	1	1 615 430 020	Grease Tube 225 ML .	1.467,00
893	1	1 615 430 001	Grease Tube 225 ML .	546,00

Please observe: Repairing, modifying and testing of electro-tools are to be performed professionally.The safety regulations according to IEC, EN, VDE, AFNOR and other regulations of the individual countries are to be observed. Subject to change.
This price list supersedes all previous edition. Prices are subjected to change without any prior notice.

BOSCH Power Tools	Cordless Hammer Drill	Model GBH 18V-34 CF 3 611 J14 080 | BO

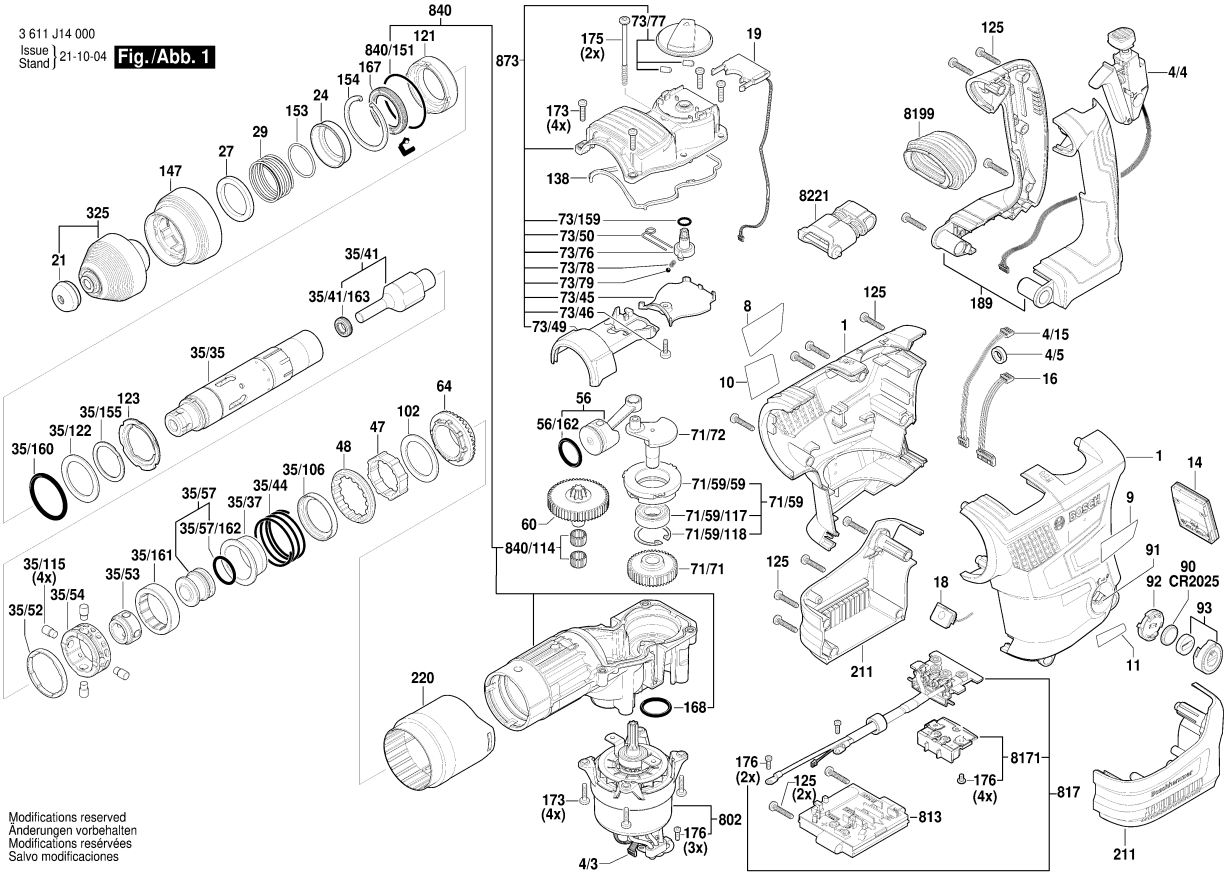

Model: 3 611 J14 080 = 18	Date:

Item	Pc	Order no.	Description	LP IN INR
1	1	1 605 806 5LW	Housing Section .	1.425,00
4/3	1	1 607 503 565	Ribbon cable .	194,00
4/4	1	2 607 202 360	Switch .	1.199,00
4/5	1	1 600 A02 4AU	Ferrite .	253,00
4/15	1	1 607 503 566	Ribbon cable .	
8	1	1 601 11A 3H5	Nameplate .	
9	1	1 601 11C 325	Manufacturer's nameplate .	
10	1	1 601 11C 328	Reference Plate .	
11	1	1 601 11C 322	Sticker .	
14	1	1 607 233 5EP	Electronic Module .	1.200,00
16	1	1 607 503 567	Ribbon cable .	195,00
18	1	1 607 233 5FP	Electronics Module .	152,00
19	1	1 607 233 5EH	Electronics Module .	248,00
21	1	1 610 508 047	Protective Cap .	60,00
22	1	1 600 A00 2YF	Protection Sleeve .	
24	1	1 600 A00 DJ5	Collar Sleeve .	119,00
27	1	1 600 A01 A7R	Backup ring .	232,00
29	1	1 604 612 01L	Compression Spring .	235,00
35/35	1	1 600 A00 DH3	Hammer Pipe .	4.268,00
35/37	1	1 600 A00 30R	Control Bushing .	506,00
35/41	1	1 600 A00 2Z0	Striker Pin .	1.066,00
35/41/16	1	1 600 A00 9VC	Shaft Seal .	141,00
35/44	1	1 604 612 00N	Compression Spring .	89,00
35/52	1	1 600 A01 SR3	Retaining snap ring .	93,00

Item	Pc	Order no.	Description	LP IN INR
35/53	1	1 600 A00 30F	Stop Bushing .	608,00
35/54	1	1 600 A01 S20	Spacer Tube .	192,00
35/57	1	1 600 A01 B3F	Striker .	513,00
35/57/16	1	1 600 210 096	O-Ring .	211,00
35/106	1	1 600 A00 30W	Supporting Disc .	314,00
35/115	4	1 603 123 04B	Driving Pin .	155,00
35/122	1	1 600 A00 305	Stop Disc .	108,00
35/155	1	1 600 150 02Y	Spring retaining ring .	85,00
35/160	1	1 600 210 05S	Damping Ring .	128,00
35/161	1	1 600 A00 30L	Damping Ring .	428,00
47	1	1 600 A00 48K	Gear Sleeve .	220,00
48	1	1 600 A01 9TP	Clutch Sleeve .	166,00
56	1	1 600 A01 B3D	Hammer Piston .	554,00
56/162	1	1 600 210 096	O-Ring .	211,00
60	1	1 600 A00 33N	Coupling .	2.668,00
64	1	1 600 A00 39T	Crown Gear .	1.850,00
71/59	1	1 600 A01 B36	Bearing Pedestal .	1.115,00
71/59/59	1	1 600 A01 00Y	Bearing Pedestal .	753,00
71/59/11	1	1 900 905 162	groove ball bearing	453,00
71/59/11	1	2 916 660 013	Retaining clip DIN	48,00
71/71	1	1 600 A01 1GY	Eccentric Cog Wheel .	538,00
71/72	1	1 600 A01 00X	Eccentric Shaft .	294,00
73/45	1	1 600 A01 9XJ	Support Plate .	80,00
73/46	1	1 603 435 08V	Thread-forming tap. Screw	29,00

Please observe: Repairing, modifying and testing of electro-tools are to be performed professionally.The safety regulations according to IEC, EN, VDE, AFNOR and other regulations of the individual countries are to be observed. Subject to change.
This price list supersedes all previous edition. Prices are subjected to change without any prior notice.

3 611 J14 000
Issue / Stand 23-08-24 **Fig./Abb. 2**

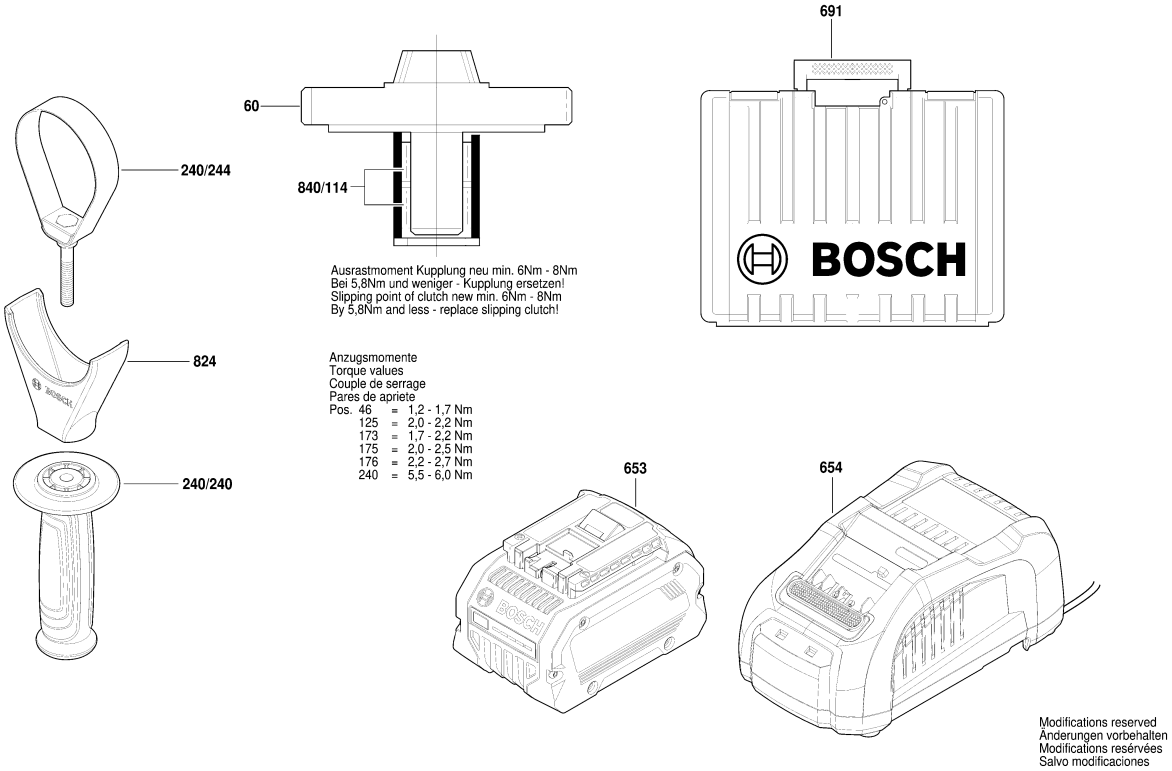

Model: 3 611 J14 080 = 18 | Date:

Item	Pc	Order no.	Description	LP IN INR
73/49	1	1 600 A00 3YK	Control Fork .	118,00
73/50	1	1 604 651 01F	Coiled Spring .	29,00
73/76	1	1 600 A01 4A7	Shift Curve .	29,00
73/77	1	1 602 026 10B	Clamp Handle .	89,00
73/78	1	1 614 611 024	Compression Spring .	29,00
73/79	1	1 903 230 007	Ball DIN 5401-4 MM-III-ST .	71,00
73/159	1	1 610 210 198	O-Ring 9,0x3,0 MM .	29,00
91	1	1 600 A01 6CZ	Electronics Module .	402,00
92	1	1 600 A01 3WF	Electronics Module .	275,00
93	1	1 605 500 2GJ	Cover .	110,00
102	1	1 600 A00 48H	Shim ring 1.4 mm .	69,00
102	1	1 600 A00 48G	Shim ring 1.5 mm .	69,00
102	1	1 600 A00 48F	Shim ring 1.6 mm .	70,00
121	1	1 600 A01 B3G	Plain bearing .	963,00
123	1	1 600 A00 307	Support Disc .	380,00
125	16	2 603 490 023	Torx Oval-Head Screw	30,00
138	1	1 600 A00 4DH	Sealing Frame .	136,00
144	1	1 610 103 025	Supporting Disc .	180,00
147	1	1 600 A00 DH2	Guide Sleeve .	169,00
153	1	1 600 150 02C	Retaining ring .	29,00
154	1	1 600 150 02X	Spring retaining ring .	78,00
167	1	1 600 A00 308	Shaft Seal .	343,00
168	1	1 610 283 047	Rotary shaft lip seal .	117,00
173	8	1 603 435 091	Torx Oval-Head Screw .	29,00

Item	Pc	Order no.	Description	LP IN INR
175	2	1 600 A01 N0N	Torx socket button screw .	29,00
176	9	1 603 430 03T	Screw .	29,00
189	1	1 605 132 18X	Handle .	789,00
211	1	1 605 108 2HP	Cover Plate .	623,00
220	1	1 600 A01 2MW	Cover Pipe .	
240/240	1	1 602 025 09C	Auxiliary Handle .	556,00
240/244	1	1 600 A01 E9C	Clamping Band .	383,00
325	1	1 618 597 12G	Tool Holding Fixture .	2.519,00
691	1	1 605 438 1G2	Carrying Case .	
802	1	1 607 000 DL7	DC motor .	5.785,00
813	1	1 607 000 E53	Electronic Module .	
817	1	1 607 000 DN0	Contact retainer .	1.609,00
824	1	1 607 000 E6B	Support clamp .	
840	1	1 607 000 DL9	Impact Mechanism	4.985,00
840/114	2	1 600 A01 N8S	Needle-Roller Assembly .	264,00
840/151	1	1 600 210 060	O-Ring .	29,00
873	1	1 600 A01 E0A	Housing Cover .	2.296,00
8171	1	1 607 000 DL8	Contact retainer .	865,00
8199	1	1 607 000 E61	Boot .	
8221	1	1 607 000 E60	Decoupling Element .	

Please observe: Repairing, modifying and testing of electro-tools are to be performed professionally.The safety regulations according to IEC, EN, VDE, AFNOR and other regulations of the individual countries are to be observed. Subject to change.
This price list supersedes all previous edition. Prices are subjected to change without any prior notice.

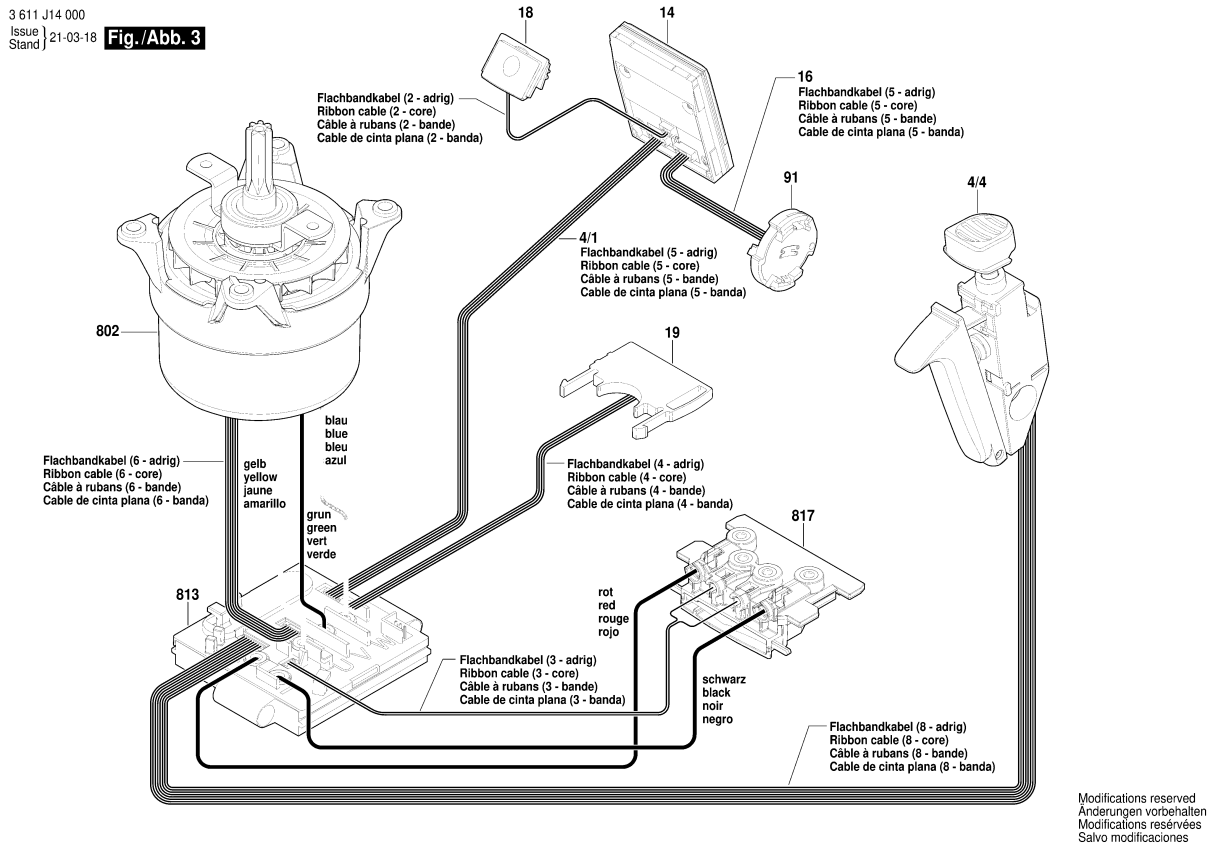

Modifications reserved
Änderungen vorbehalten
Modifications reservées
Salvo modificaciones

3 / 3

Model: 3 611 J14 080 = 18	Date:

Item	Pc	Order no.	Description	LP IN INR	Item	Pc	Order no.	Description	LP IN INR

Please observe: Repairing, modifying and testing of electro-tools are to be performed professionally.The safety regulations according to IEC, EN, VDE, AFNOR and other regulations of the individual countries are to be observed. Subject to change.
This price list supersedes all previous edition. Prices are subjected to change without any prior notice.

BOSCH Power Tools	Secateurs	Model Pro Pruner 3 601 JK1 0L0 | BO

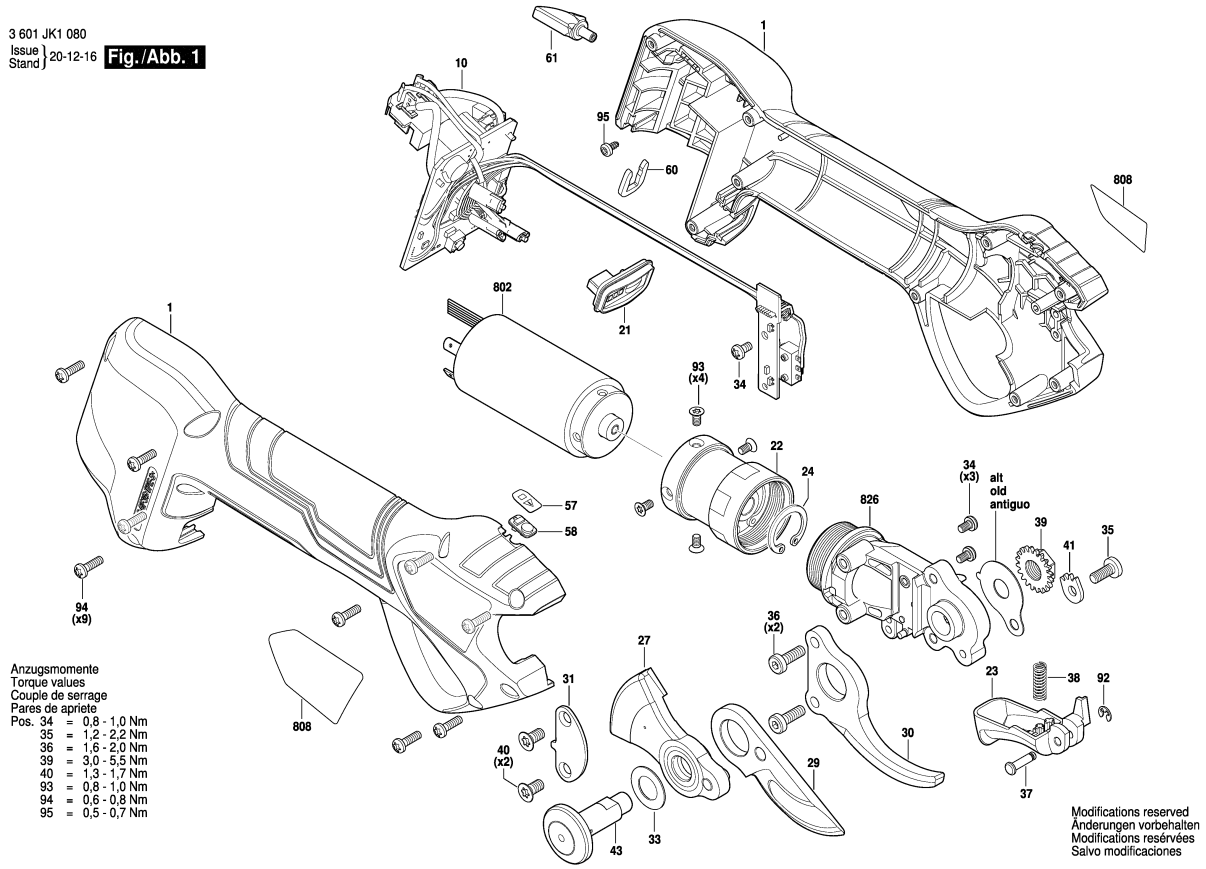

Model: 3 601 JK1 0L0 = 12 | Date:

Item	Pc	Order no.	Description	LP IN INR
1	1	1 619 P15 717	Housing Section .	453,00
10	1	1 619 P15 722	Electronic Module .	2.285,00
21	1	1 619 P15 952	plastic covering .	109,00
22	1	1 619 P15 723	Gear Box .	1.698,00
23	1	1 619 P15 724	Trigger .	99,00
24	1	2 916 669 005	Spring retaining ring .	89,00
27	1	1 619 P15 727	Bevel Gear .	594,00
29	1	1 619 P15 729	Cutting Knife .	474,00
30	1	1 619 P15 730	Blade .	560,00
31	1	1 619 P15 731	Cover Plate .	101,00
33	1	2 600 101 616	Shim 0,5 MM .	42,00
34	3	2 603 414 048	Torx SH cap screw	44,00
35	1	2 603 413 035	Oval-Head Screw M4x8 .	29,00
36	2	1 619 P01 678	Screw .	30,00
37	1	1 619 P15 733	Bolt .	101,00
38	1	2 610 935 251	Compression Spring .	41,00
39	1	1 619 P15 875	Locking nut .	105,00
40	2	1 619 P11 989	Screw .	52,00
41	1	1 619 P15 876	Locking Plate .	94,00
43	1	1 619 P15 734	Shaft .	194,00
57	1	1 619 P15 956	Sticker .	
58	1	1 619 P15 963	Dust Separator .	90,00
60	1	1 619 P08 646	Clip .	29,00
61	1	1 619 P16 103	Cover .	104,00

Item	Pc	Order no.	Description	LP IN INR
92	1	1 619 P00 445	Retaining ring .	29,00
93	4	3 608 875 340	Countersunk-Head Screw .	47,00
94	9	1 619 P00 220	Torx Oval-Head Screw	30,00
95	1	2 609 001 139	Oval-Head Screw .	47,00
651	1	1 607 A35 0C5	Battery Pack GBA 12V	
653	1	2 607 226 541	Fast Charger IND GAL	
653	1	2 607 226 189	Fast Charger GB GAL	
653	1	2 607 226 187	Fast Charger EU GAL	
694	1	1 619 P01 393	Latch .	31,00
802	1	1 619 P16 098	Motor assembly .	2.178,00
808	1	1 619 P17 105	Nameplate .	
826	1	1 619 P16 099	Bearing Bracket .	659,00

Please observe: Repairing, modifying and testing of electro-tools are to be performed professionally.The safety regulations according to IEC, EN, VDE, AFNOR and other regulations of the individual countries are to be observed. Subject to change.
This price list supersedes all previous edition. Prices are subjected to change without any prior notice.

3 601 JK1 080
Issue / Stand } 20-08-12 **Fig./Abb. 2**

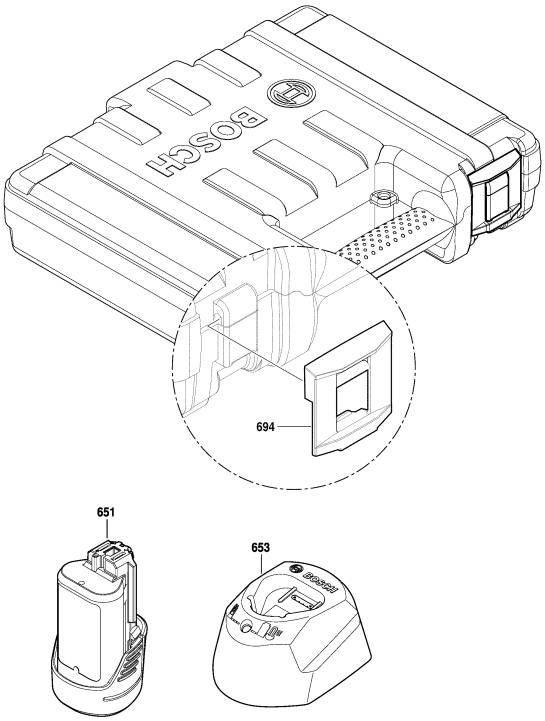

Modifications reserved
Änderungen vorbehalten
Modifications reservées
Salvo modificaciones

Model: 3 601 JK1 0L0 = 12	Date:

Item	Pc	Order no.	Description	LP IN INR	Item	Pc	Order no.	Description	LP IN INR

Please observe: Repairing, modifying and testing of electro-tools are to be performed professionally.The safety regulations according to IEC, EN, VDE, AFNOR and other regulations of the individual countries are to be observed. Subject to change.
This price list supersedes all previous edition. Prices are subjected to change without any prior notice.

BOSCH Power Tools	Cordless Angle Grinder	Model GWS 180-LI 3 601 JH9 0K0 | BO

3 601 JH9 080
Stand ~~22-04~~
Issue 22-10-06

Fig./Abb. 1

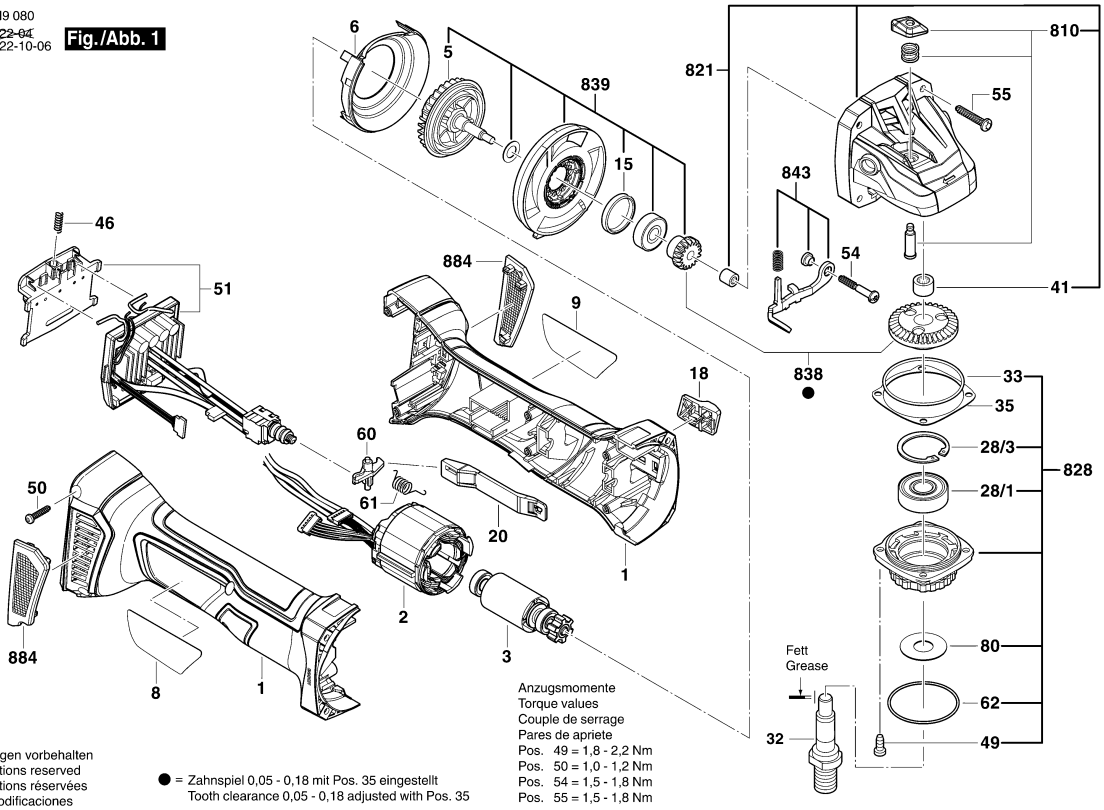

Model: 3 601 JH9 0K0 = 18 | Date:

Item	Pc	Order no.	Description	LP IN INR
1	1	1 619 P15 044	Motor Housing .	466,00
2	1	1 600 A01 A6N	Stator .	885,00
3	1	1 600 A01 A6S	Rotor .	1.036,00
5	1	1 619 P15 054	Fan .	100,00
6	1	1 619 P16 509	Air-Deflector Ring .	123,00
8	1	1 619 P15 790	Nameplate .	
9	1	1 619 P15 781	Manufacturer's nameplate .	
15	1	1 600 206 025	Rubber Ring .	28,00
18	1	1 619 P15 338	Switch Handle .	78,00
20	1	1 619 P15 050	Adjusting Slide .	79,00
28/1	1	1 619 P07 440	Ball Bearing .	212,00
28/3	1	2 916 660 013	Retaining clip DIN	48,00
32	1	1 603 523 111	Grinding Spindle M10,	96,00
33	1	1 619 P02 820	O-Ring 44,0x1,0 MM .	30,00
35	1	1 619 P02 821	Shim 0,1 MM .	30,00
35	1	1 619 P02 822	Shim 0,2 MM .	30,00
41	1	1 600 200 029	Plain bearing .	30,00
46	1	1 609 280 477	Compression Spring .	49,00
49	4	1 619 P11 118	Thread-forming tap. Screw	36,00
50	6	2 609 110 201	Torx Flat-Head Screw 3x16	28,00
51	1	1 600 A01 NC3	Electronics Module .	2.804,00
54	1	2 603 490 025	Torx Oval-Head Screw	31,00
55	3	1 619 P01 066	Torx Oval-Head Screw	30,00
60	1	1 619 P15 795	Reverse-Transfer Lever .	69,00

Item	Pc	Order no.	Description	LP IN INR
61	1	1 619 P15 806	Torsion Spring .	59,00
62	1	1 600 210 038	O-Ring 38,0x1,5 MM .	73,00
80	1	1 619 P09 390	Cover Disc .	69,00
650/1	1	1 619 P10 681	Auxiliary Handle .	174,00
650/1	1	1 619 P16 111	Auxiliary Handle .	145,00
650/2	1	1 619 P09 976	Round Nut With 2 Holes .	52,00
650/5	1	1 619 P12 159	Clamping-Flange	49,00
650/30	1	2 609 110 015	Pin-Type Face-Wrench .	48,00
651	1	1 619 P14 537	Protective Cover .	242,00
652	1	2 607 225 921	Charger EU GAL 1880 CV	5.104,00
652	1	2 607 225 923	Charger GB 230/10,8-18V,	
652	1	2 607 226 251	Fast Charger EU GAL	
652	1	2 607 226 253	Fast Charger GB GAL	
653	1	2 607 337 069	Battery Pack BBS MR,	
653	1	1 607 A35 0AT	Battery Pack GBA 18V	
653	1	1 607 A35 0V8	Battery Pack GBA 18V	
653	1	1 607 A35 0V9	Battery Pack GBA 18V	
653	1	1 607 A35 0MN	Battery Pack GBA 18V	
653	1	1 607 A35 0M0	Battery Pack GBA 18V	
810	1	1 619 P16 236	Push Button .	119,00
821	1	1 619 P16 237	Gear Housing .	657,00
828	1	1 619 P11 098	Bearing Flange .	536,00
838	1	1 619 P16 240	Gear Unit .	374,00
839	1	1 619 P16 234	Bevel Gear Shaft .	709,00

Please observe: Repairing, modifying and testing of electro-tools are to be performed professionally.The safety regulations according to IEC, EN, VDE, AFNOR and other regulations of the individual countries are to be observed. Subject to change.
This price list supersedes all previous edition. Prices are subjected to change without any prior notice.

3 601 JH9 080
Stand / Issue 20-09-21 **Fig. /Abb. 2**

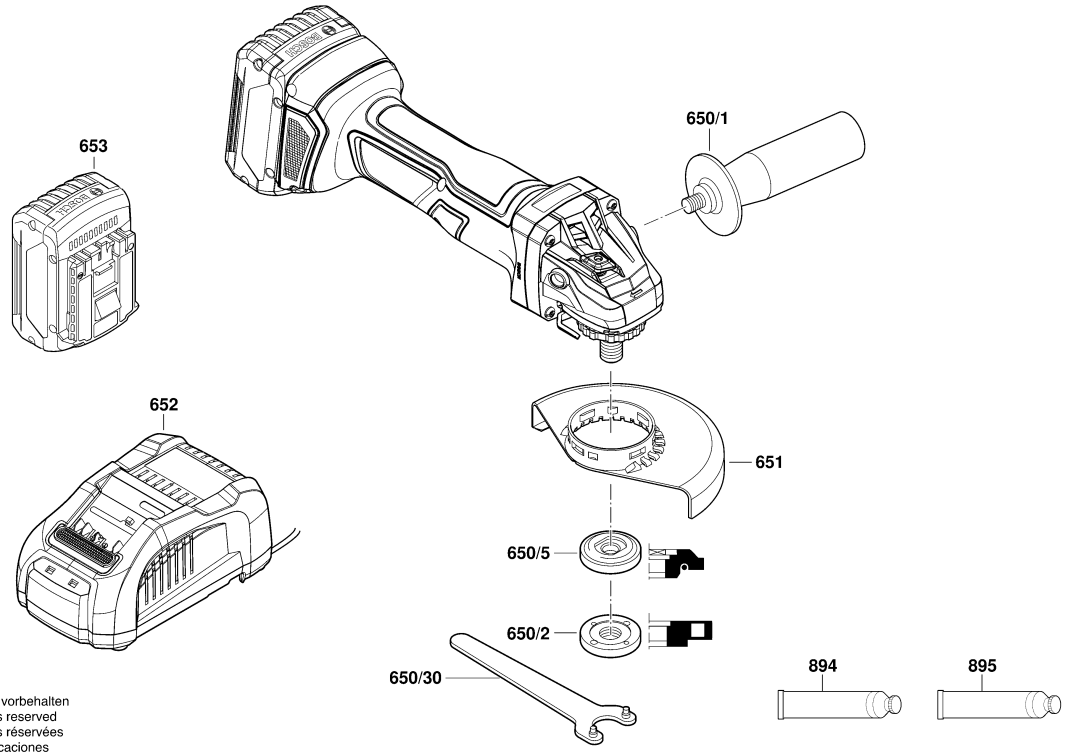

Änderungen vorbehalten
Modifications reserved
Modifications réservées
Salvo modificaciones

2 / 2

Model: 3 601 JH9 0K0 = 18 | Date:

Item	Pc	Order no.	Description	LP IN INR
843	1	1 619 P11 076	Catch Lever .	136,00
884	1	1 607 000 CA9	Filter Unit .	453,00
894	1	1 615 430 020	Grease Tube 225 ML .	1.467,00
895	1	1 605 430 003	Grease Tube 225 ML .	1.585,00

Item	Pc	Order no.	Description	LP IN INR

Please observe: Repairing, modifying and testing of electro-tools are to be performed professionally.The safety regulations according to IEC, EN, VDE, AFNOR and other regulations of the individual countries are to be observed. Subject to change.
This price list supersedes all previous edition. Prices are subjected to change without any prior notice.

BOSCH Power Tools	Cordless Angle Grinder	Model GWS 18V-10 3 601 JJ4 0K0 | BO

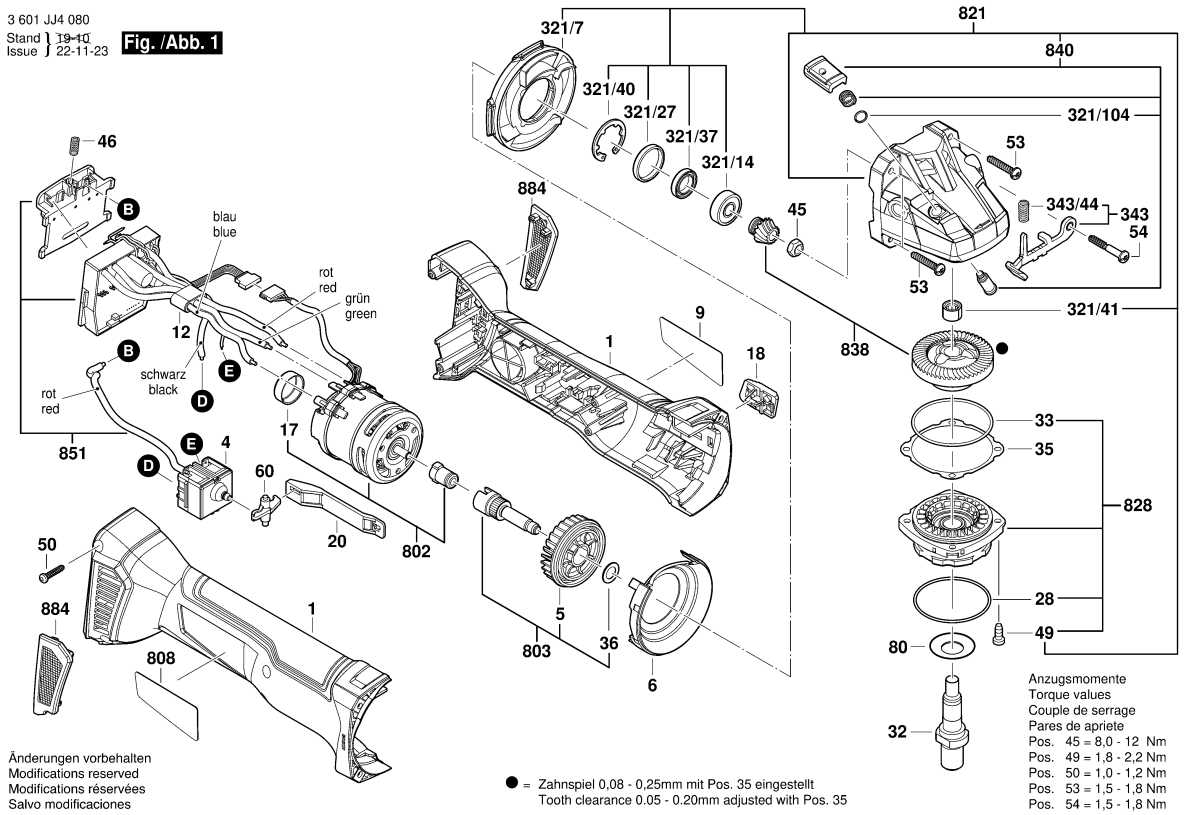

Model: 3 601 JJ4 0K0 = 18 | Date:

Item	Pc	Order no.	Description	LP IN INR
1	1	1 619 P15 334	Motor Housing .	1.012,00
4	1	2 607 202 328	Switch .	683,00
5	1	1 619 P16 641	Fan .	144,00
6	1	1 600 591 065	Air-Deflector Ring .	125,00
9	1	1 619 P15 337	Manufacturer's nameplate .	
12	1	1 600 A00 RK2	Ferrite .	104,00
17	1	1 600 100 P12	Cover .	77,00
18	1	1 619 P15 338	Switch Handle .	78,00
20	1	1 619 P16 511	Adjusting Slide .	29,00
28	1	3 600 210 109	O-Ring 47,0x1,5 MM .	50,00
32	1	1 603 523 111	Grinding Spindle M10,	96,00
33	1	1 600 210 035	O-Ring 46,0x1,1 MM .	51,00
35	1	1 600 136 013	Shim 0,1 MM THICK	71,00
35	1	1 600 136 014	Shim 0,2 MM THICK	71,00
35	1	1 600 136 015	Shim 0,3 MM THICK	68,00
35	1	1 600 136 020	Shim 0,15 MM THICK	84,00
36	1	1 610 100 023	Washer .	46,00
45	1	1 619 P17 544	Hex Nut .	
46	1	1 609 280 477	Compression Spring .	49,00
49	4	2 914 491 410	Thread-forming tap. Screw	31,00
50	4	2 609 110 201	Torx Flat-Head Screw 3x16	28,00
53	3	1 619 P01 066	Torx Oval-Head Screw	30,00
54	1	2 603 490 025	Torx Oval-Head Screw	31,00
60	1	1 600 A00 P18	Reverse-Transfer Lever .	46,00

Item	Pc	Order no.	Description	LP IN INR
80	1	1 619 P09 390	Cover Disc .	69,00
321/7	1	1 619 P16 508	Air Distributor .	
321/14	1	1 619 P09 955	groove ball bearing .	79,00
321/27	1	1 600 206 025	Rubber Ring .	28,00
321/37	1	1 600 A00 P17	Holder .	46,00
321/40	1	1 600 119 011	Retaining clip .	50,00
321/41	1	1 600 200 029	Plain bearing .	30,00
321/104	1	1 600 210 044	O-Ring 4,5x1,0 MM BLUE	31,00
343	1	1 607 000 742	Catch Lever .	246,00
343/44	1	1 604 611 042	Compression Spring .	31,00
650/1	1	1 619 P10 681	Auxiliary Handle .	174,00
650/2	1	1 619 P09 976	Round Nut With 2 Holes .	52,00
650/3	1	1 619 P08 928	Pin-Type Face-Wrench .	37,00
650/5	1	1 619 P12 159	Clamping-Flange	49,00
651	1	1 600 A01 2JH	Protective Cover .	158,00
652	1	2 607 225 921	Charger EU GAL 1880 CV	5.104,00
652	1	2 607 225 923	Charger GB 230/10,8-18V,	
652	1	2 607 226 251	Fast Charger EU GAL	
653	1	2 607 337 069	Battery Pack BBS MR,	
653	1	1 607 A35 0AT	Battery Pack GBA 18V	
802	1	1 607 000 CA4	Motor .	4.132,00
803	1	1 607 000 CA5	Bevel Gear Shaft .	394,00
808	1	1 619 P15 477	Nameplate .	
821	1	1 607 000 CA6	Gear Housing .	859,00

Please observe: Repairing, modifying and testing of electro-tools are to be performed professionally.The safety regulations according to IEC, EN, VDE, AFNOR and other regulations of the individual countries are to be observed. Subject to change.
This price list supersedes all previous edition. Prices are subjected to change without any prior notice.

3 601 JJ4 080
Stand / Issue 19-10-22 **Fig. /Abb. 2**

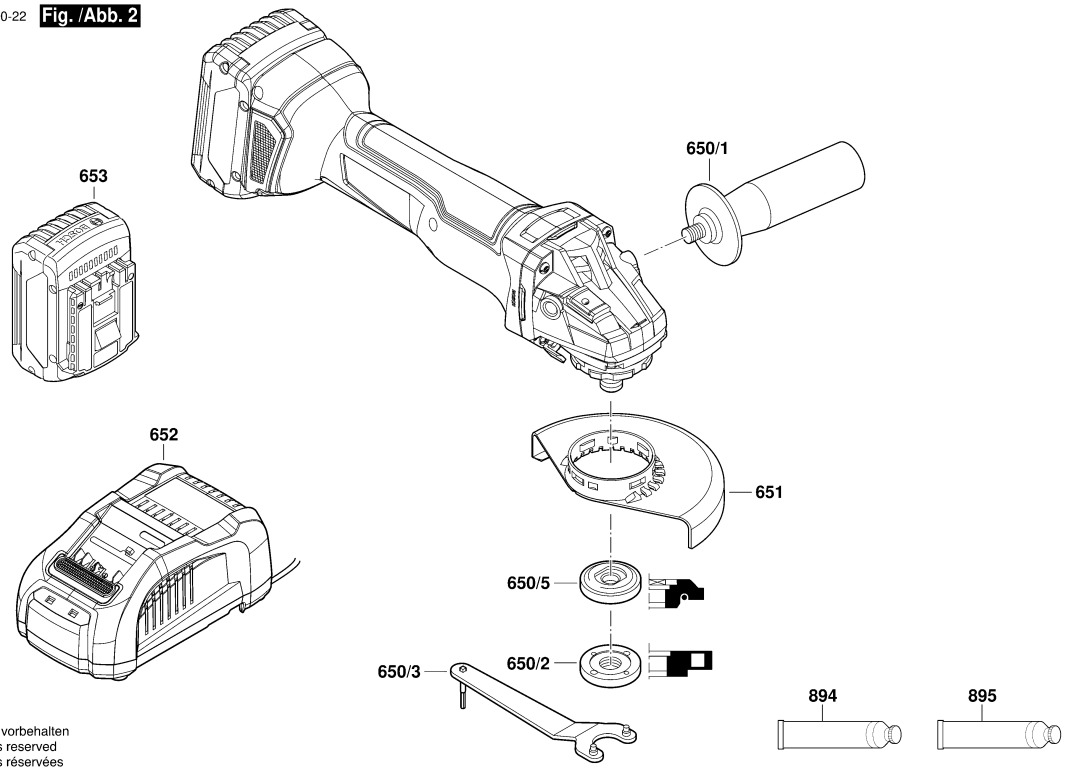

Änderungen vorbehalten
Modifications reserved
Modifications réservées
Salvo modificaciones

Model: 3 601 JJ4 0K0 = 18 | Date:

Item	Pc	Order no.	Description	LP IN INR	Item	Pc	Order no.	Description	LP IN INR
828	1	1 619 P15 775	Bearing Flange .	533,00					
838	1	1 607 000 CA8	Gear Unit .	762,00					
840	1	1 607 000 V41	Push-Button .	139,00					
851	1	1 619 P15 493	Electronics Module .	4.836,00					
884	1	1 607 000 CA9	Filter Unit .	453,00					
894	1	1 615 430 020	Grease Tube 225 ML .	1.467,00					
895	1	1 605 430 003	Grease Tube 225 ML .	1.585,00					

Please observe: Repairing, modifying and testing of electro-tools are to be performed professionally.The safety regulations according to IEC, EN, VDE, AFNOR and other regulations of the individual countries are to be observed. Subject to change.
This price list supersedes all previous edition. Prices are subjected to change without any prior notice.

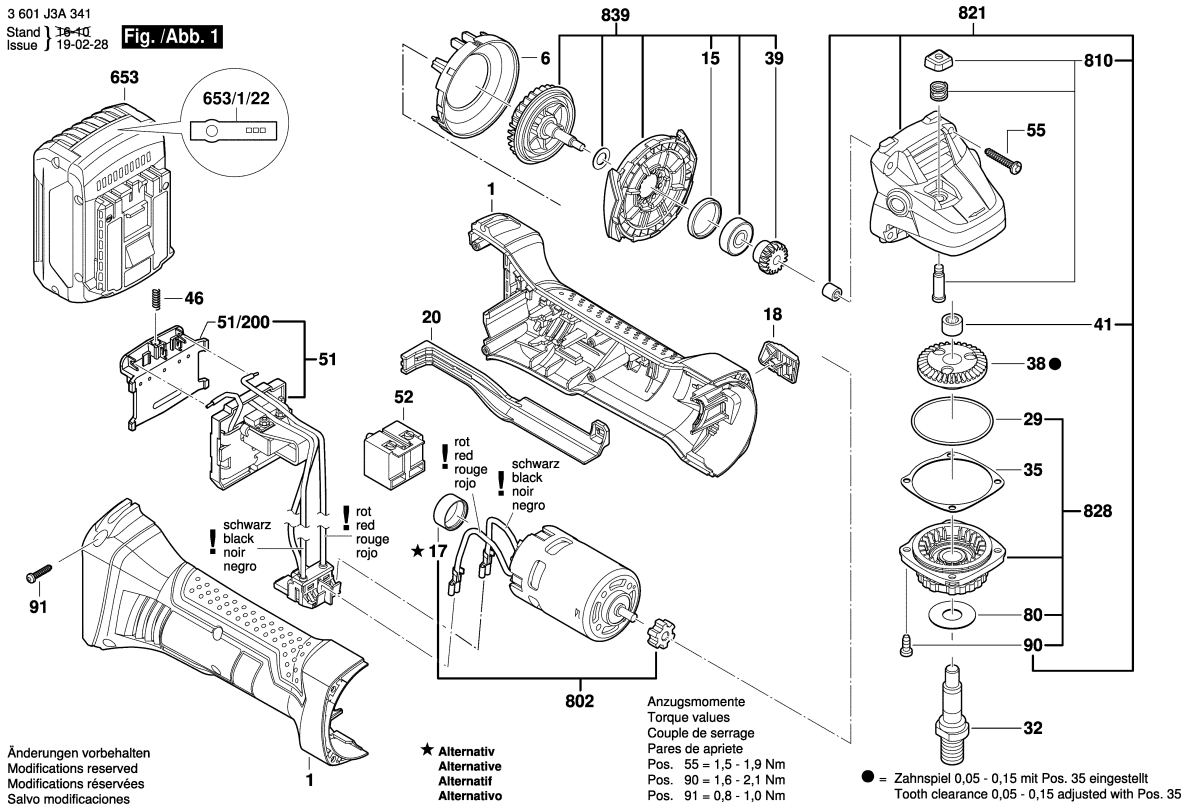

Model: 3 601 J3A 382 = 18/220 | Date:

Item	Pc	Order no.	Description	LP IN INR
1	1	1 605 108 282	Housing Section BLUE	699,00
6	1	1 600 591 046	Air-Deflector Ring .	51,00
9	1	1 619 P31 073	Manufacturer's nameplate .	
15	1	1 600 206 025	Rubber Ring .	28,00
17	1	1 600 A00 1PY	Cover .	36,00
18	1	1 619 P02 812	Switch Button .	27,00
20	1	1 619 P12 305	Adjusting Slide .	47,00
29	1	1 619 P02 820	O-Ring 44,0x1,0 MM .	30,00
32	1	1 619 P06 419	Grinding Spindle M 14, SW	385,00
35	1	1 619 P02 821	Shim 0,1 MM .	30,00
35	1	1 619 P02 822	Shim 0,2 MM .	30,00
38	1	1 619 P12 306	Crown Gear .	201,00
39	1	1 619 P12 307	Bevel Gear .	107,00
41	1	1 600 200 029	Plain bearing .	30,00
46	1	1 609 280 477	Compression Spring .	49,00
51	1	1 607 233 340	Electronics Module .	2.232,00
51/200	1	1 609 280 478	Contact retainer .	453,00
52	1	2 607 202 071	On-Off Switch .	421,00
55	4	2 603 490 024	Torx Oval-Head Screw	48,00
80	1	1 619 P09 390	Cover Disc .	69,00
90	4	1 603 435 068	Thread-forming tap. Screw	43,00
91	4	1 619 P00 219	Tapping Screw .	45,00
651	1	1 600 A00 XU7	Protective Cover Ø125 MM	553,00
652	1	2 607 225 325	Fast Charger AUS	4.534,00

Item	Pc	Order no.	Description	LP IN INR
652	1	2 607 226 267	Fast Charger CN GAL	
652	1	2 607 225 439	Fast Charger CN	
653	1	1 607 A35 0M0	Battery Pack GBA 18V	
653	1	1 607 A35 0MA	Battery Pack GBA 18V	
653	1	2 607 337 069	Battery Pack BBS MR,	
653/1/22	1	2 601 115 537	Sticker .	
802	1	1 617 000 6B0	DC motor 18V .	3.464,00
810	1	1 619 P02 873	Push-Button .	60,00
821	1	1 617 000 6B2	Gear Housing .	1.475,00
828	1	1 617 000 6B3	Bearing Flange .	319,00
839	1	1 600 A00 M8J	Set Of Gearwheels .	1.449,00
891	1	1 602 025 09T	Auxiliary Handle .	109,00
892	1	1 603 345 043	Round Nut M14 .	110,00
893	1	1 619 P08 927	Pin-Type Face-Wrench .	179,00
895	1	2 605 703 014	Clamping Flange	104,00
895/2	1	1 600 210 039	O-Ring 20,35x1,78 MM .	30,00
896	1	1 615 430 020	Grease Tube 225 ML .	1.467,00
897	1	1 605 430 003	Grease Tube 225 ML .	1.585,00

Please observe: Repairing, modifying and testing of electro-tools are to be performed professionally.The safety regulations according to IEC, EN, VDE, AFNOR and other regulations of the individual countries are to be observed. Subject to change.
This price list supersedes all previous edition. Prices are subjected to change without any prior notice.

3 601 J3A 341
Stand ~~14-11~~
Issue 14-12-03

Fig. /Abb. 2

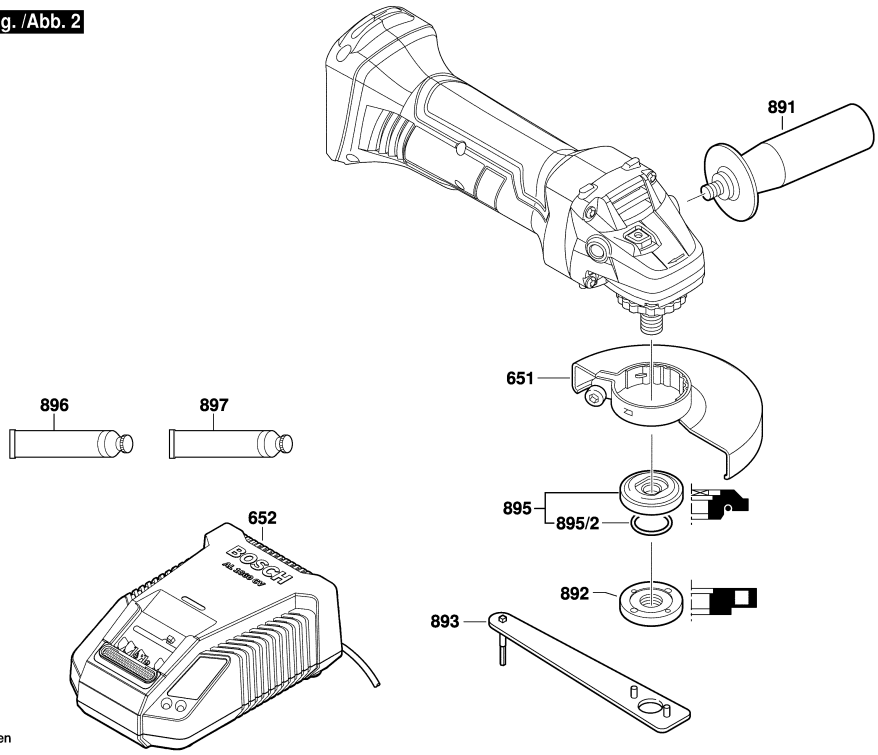

Änderungen vorbehalten
Modifications reserved
Modifications réservées
Salvo modificaciones

Model: 3 601 J3A 382 = 18/220	Date:

Item	Pc	Order no.	Description	LP IN INR	Item	Pc	Order no.	Description	LP IN INR

Please observe: Repairing, modifying and testing of electro-tools are to be performed professionally.The safety regulations according to IEC, EN, VDE, AFNOR and other regulations of the individual countries are to be observed. Subject to change.
This price list supersedes all previous edition. Prices are subjected to change without any prior notice.

Bosch original greases and oils. Tested and recommended for Bosch power tools.

Basic guide to correct use of **greases and oils in repair**

You will find detailed lubrication instructions in the spare part documentation on the **internet** or on our **Service DVD.**

BOSCH

What purpose do lubricants serve in a power tool?

Lubricants perform many important tasks: friction and wear reduction, power transfer, cooling, vibration damping, sealing, and corrosion protection. As with all machine parts, lubricants are also subject to aging and wear. They become dirty, overheat or dry out. When this happens, or during every necessary wear repair, they have to be replaced or replenished.

Not all greases are the same, and not all oils are the same.

In addition to a base oil, lubricants usually contain additives which give them certain characteristics.

- Fluidity
- Oxidation resistance
- Friction characteristic.

The base oil and the additives are precisely tailored to each other and to the relevant requirements of use. Original greases and oils from Bosch are developed especially for Bosch Power Tools and meet the same high quality standard as the tools themselves.

What has to be observed when greasing and oiling during repairs?

Bosch original greases and oils must not be mixed with each other, nor under any circumstances with non-recommended greases and oils. The specified quantities and the lubrication instructions for each tool must be observed at all times.

Your advantages at a glance

Using Bosch original greases and oils during repair pays off:

- **The components of the tool deliver optimum performance**
- **Abrasion and wear of the parts are as low as possible**
- **The operating time between service intervals is increased**
- **The service life of the tool is maximised**

Subject to technical alterations

Bosch original greases and oils. Tested and recommended for Bosch power tools.

How to ensure that you always have the right greases and oils in stock.

We have compiled a selection of the most common lubricants for repairing tools from various product groups. You can therefore order any quantity of the required lubricants to meet your individual requirements.

Note

Repairs must be performed only by trained experts.

To ensure correct use of greases and oils during repair, please always observe the tool-specific lubrication instructions in our service documentation on the internet or on our Service DVD.

Common lubricants: suitable for most tools within a product group. These should be available at every workshop.*

	Lubricant part numbers						Small angle grinders *	Large angle grinders *	Rotary hammers 1-4kg *	Rotary hammers >= 5kg *	Demolition hammers <12kg *	Impact drill *	Drill/drivers *	Jigsaws *
Lubricant	**30 ml**	**45 ml**	**50 ml**	**225 ml**	**1000 ml**	**5 kg**								
Gearbox grease		1 615 430 005		1 615 430001	1 615 430007		×		×	×	×	×	×	×
Special gearbox grease		1 615 430 014		1 615 430 015	1 615 430 016				×	×	×			
Special grease				1 615 430 002					×	×	×	×	×	
Special gearbox grease				1 605 430 003			×	×				×	×	
Gearbox grease				1 615 430 017	1 615 430 018		×							
Ball bearing grease/Roller bearing grease				1 615 430 020			×	×	×	×	×	×	×	×
Gearbox grease				3 605 430 002		3 605 430010						×	×	
Gearbox grease/Special grease				3 605 430 003				×				×	×	×
Gearbox grease/High-temperature grease				3 605 430 004										×
Special grease				3 605 430 009					×	×				
Special oil			1 615 437 509 1 615 437 511 1 615 437 512		1 615 430 019				×	×	×			
Special oil					1 615 430 012				×					
Hydraulic oil					3 605 430008		×					×	×	×
Grease for shanks of accessories	1 615 430 010								×	×	×			

*Please always observe the tool-specific lubrication instructions in our service documentation on the internet or on our Service DVD.

You will find current offers for ordering lubricants in a stock-up set on the extranet.

Bosch original greases and oils. Tested and recommended for Bosch power tools.

How to find the right grease and oil on the internet and extranet.

You will find all instructions for the greases and oils recommended by Bosch in our spare part documentation. Please note: Repairs must be performed only by trained experts.

Step 1

Use our spare part search via your access to the extranet: http://partner.bosch.de/ew/uk or on the internet at: www.bosch-professional.co.uk

Step 2

Search for the right spare part list for your tool (by trade name or part number)

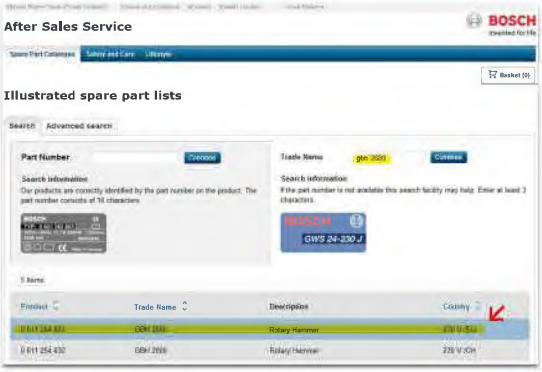

Step 3

Under "Technical information" –> "Lubrication instructions" you will find the detailed instructions.

There you will find:

- the 10-digit part number for the suitable grease/oil
- the position number with which you can easily find the parts you have to lubricate on the spare part drawing
- the quantity of grease/oil required to perform a repair
- additional instructions on how to correctly grease/oil the parts during repair.

Please note: Make a note of the 10-digit part number for your spare part order

Step 4

Order the right grease/oil straightaway with your spare part order.

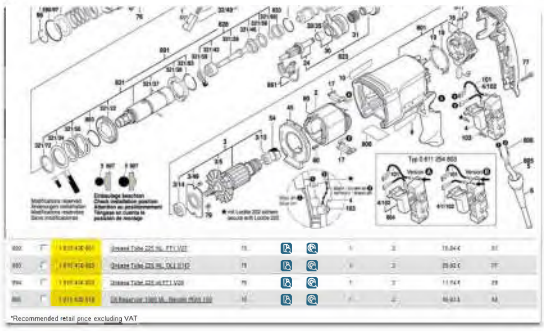

Search for the part number in the spare part list of the tool or via the "Spare part information" category. Add it to your shopping basket.

Our tip

Do you repair this type of tool quite often? Do you need the information about greasing/oiling as a printout directly at your workplace?

Then simply print the tool-specific drawing and the accompanying lubrication instruction, and you will have all the important information at a glance.

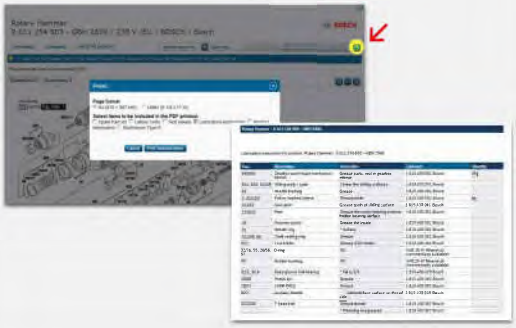

Bosch original greases and oils. Tested and recommended for Bosch power tools.

How to find the right grease and oil on the Service DVD.

You will find all instructions for the greases and oils recommended by Bosch in our spare part documentation. Please note: Repairs must be performed only by trained experts.

Step 1
Use our Service DVD and search for the right spare part list for your tool (by trade name or part number).

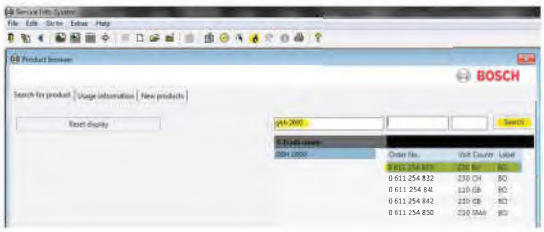

Step 2
The oil drop (🛢) guides you directly to the tool-specific lubrication instructions.
There you will find:

- the 10-digit part number for the suitable grease/oil
- the position number with which you can easily find the parts you have to lubricate on the spare part drawing
- the quantity of grease/oil required to perform a repair
- additional instructions on how to correctly grease/oil the parts during repair.

Please note: Make a note of the 10-digit part number for your spare part order

Step 3
Order the right grease/oil straightaway with your spare part order.

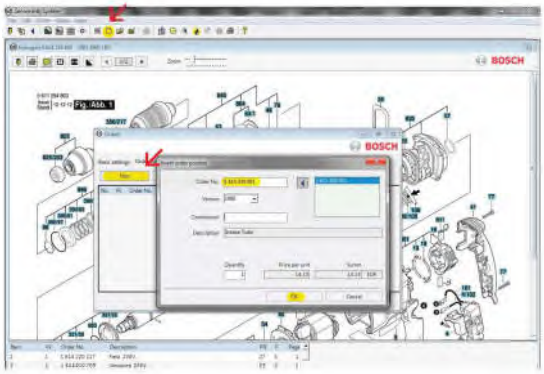

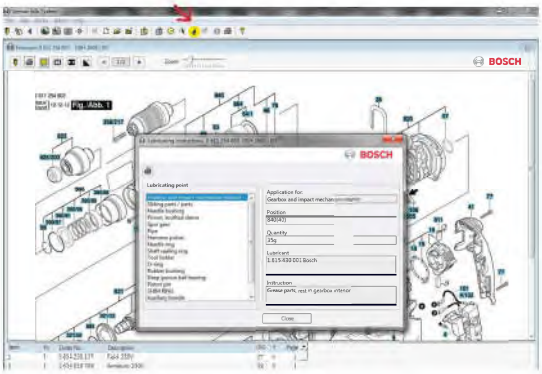

Simply add the part number to your spare part order.

Our tip

Do you repair this type of tool quite often? Do you need the information about greasing/oiling as a printout directly at your workplace?
Then simply print the tool-specific drawing and the accompanying lubrication instruction, and you will have all the important information at a glance.

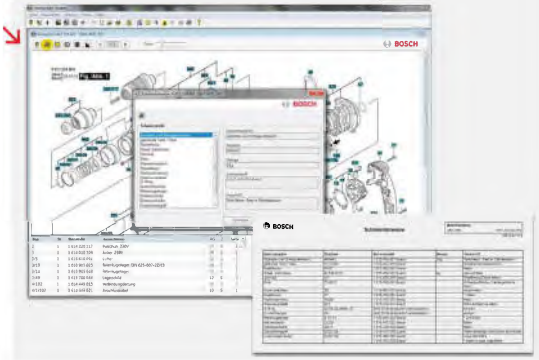

BOSCH

SERVICE

BOSCH SERVICE CENTRE

TOOL GROUP (टूल ग्रुप)	LABOUR CHARGE - लेबर चार्ज	
	Minor Repairs (छोटे रिपेयर)	Major Repairs (बड़े रिपेयर)
SAG, Drills, Impact Drills, Blowers, Cordless... GWS 600, 750, 900... GSB 10, 13, 501, 600... GBM 6, 10, 13-2... GGS 3000, 5000, 28... GBL 620, 800, GHG 500, 630... GSB, GSR, GDR, GDS, GDX...	₹ 100	₹ 150
LAG, Bench Grinder... GWS 18, 2000, 20, 23, 24, 26... GBR 15, GBG 35, 60... GPO 12, 950...	₹ 150	₹ 275
Rotary Hammers 2, 3Kg, Jig Saw, Circular Saw... GBH 200, 2-18, 2-26, 2-28, 3-28... GKS 235, GSA 1100, 1300, GST 65, 85, 150... GDS 18, GEX 125, 150... GAS 35, 55...	₹ 150	₹ 250
Aquatak, Nibbler, Shear, Planners, Sanders, Router... Aquatak 100, 110, 120, 130... GNA, GSC... GHO 10, 26, 32, 6500... GSS 140, 2300... GKF 550, POF 1400...	₹ 150	₹ 250
Bench Top, Heavy Duty Drills, Chain Saw... GCO 200, 220, 14-24... GCM 10, 12... GBM 23, 32... GKE 35...	₹ 200	₹ 300
Demolition Hammer, Rotary Hammers 4, 5, 8Kg... GSH 5, 500... GBH 4, 5, 8-45...	₹ 200	₹ 300
Demolition Hammer, Rotary Hammers 10Kg... GSH 11, 12, 16 & 27... GBH 11, 12... GTS 10J...	₹ 200	₹ 375
Core Cutters, HPW... GDB 180, 350... GHP 5-13, 5-65, 75, 8-15XD...	₹ 250	₹ 400

Note

1. The above chart gives the labour cost rate of common tools.
2. The Service Center will charge labour cost to the customers as per the above chart only.
3. For tools other than the one mentioned in the chart, labour cost should be charged by referring to the appropriate Tool Group.

नोट

1. उपरोक्त चार्ट सामान्य टूल्स के लेबर खर्च रेट देता है।
2. सर्विस सेंटर केवल उपरोक्त चार्ट के अनुसार ही ग्राहकों से लेबर खर्च चार्ज करेगा।
3. चार्ट में अंकित टूल्स के अलावा अन्य टूल्स के लिए, लेबर खर्च समुचित टूल ग्रुप को देखकर चार्ज किया जाना चाहिए।

Issued in Customer Interest by Bosch Power Tools, Service
(बॉश पॉवर टूल्स, सर्विस द्वारा ग्राहक हित में जारी)

BOSCH

BOSCH *for* ALL

SERVICE

AFFORDABLE SPARE PARTS

	Description	Part Number	Application	Features
	Drill Chuck 1,0-10 mm **Drill Chuck 13mm** **Drill Chuck Shank 1/2" SDS-Plus**	**1608571079** **1619PA1689** **1613523011**	10mm Impact Drill 13mm Impact Drill SDS Adaptor for 2kg Hammer	• Secure drill bit clamping for any Job • Easy handling: Jaws are conveniently tightened and loosened with a key • Less Vibrations in Tool
	Power Supply Cord **Power Supply Cord**	**F002G30101** **F002G31006**	Any Product (Upto 900W) Any Product (Upto 2000W)	• 6A / 2-Core Cable, 3 meter length with Moulded 2-Pin plug • 16A / 3-Core Cable, 4.15 meter length with Moulded 3-Pin plug * (current supply shall be with 2core cable, 2-pin plug until stock lasts)
	Chuck Wrench **Hex Screw (L-Nut)** **Insulating Cap**	**1619P10156** **1619P00278** **1619P06286**	Marble Cutter (4" and 5") Marble Cutter (4" and 5") Marble Cutter (4" and 5")	• Long Life • Strong Clamping Force • Easy to Use
	Grease Tube 225 ML . **Grease Tube** **Grease Tube 225 ML .** **Oil Reservoir**	**1615430001** **1615430010** **1615430020** **1615430019**	All Hammers All Hammers and Chisel Lubrication All Grinders and Saws (Gear grease) For GSH and High Pressure Washer range	• Less wear & tear of mechanical components • Enhance tool life • Works smooth at high rpm & temperature • Reduces friction of mechanical components
	pin type face-wrench **clamping flange M 10** **Round nut**	**2609110015** **1605703113** **1619P09976**	AG4 Grinder AG4 Grinder AG4 Grinder	• High Quality Steel • Strong Clamping Force • Less Wear & Tear
	Bevel **Gear Set**	**1600A0292J**	AG4 Grinder	• Less Vibration • High Durability
	Groove Ball Bearing (RE) **Groove Ball Bearing (FE)**	**1619P00456** **1619P11240**	AG4 Grinder AG4 Grinder	• Double Sealed Bearing • Self Lubricated
	On off Switch	**1607200179**	AG4 Grinder	• High Durability
	V Belt	**2609100410**	All Planners	• Less Vibration
	Switch Contact	**1611329024**	2Kg Hammers	• Copper Contact
	Impact Housing **Stopping Device**	**1617000969** **1612300025**	For 11Kg Demolition Hammer For 11Kg Demolition Hammer	• Long Life • High Durability

* Recommended for Power tools . Conditions apply.

Bosch Hai to BEST Hai

Click below for further spares e-catalogue:

https://www.boschtoolservice.com/in/en/boschprof/spareparts/search

Bosch Limited Power Tools Division
PA-AT Complex, Hosur Road
Adugodi, Bangalore-560030

www.facebook.com/BoschPTIndia

Customer Contact Center
1800 425 8665
Email: bpt@in.bosch.com
www.bosch-pt.co.in

Creating a brand footprint through world-class service and customer delight!

Bosch Limited
Power Tools Division

PA-AT Complex, Hosur Road, Adugodi, Bengaluru - 560030.
080-22999189, 22999778 Toll Free No. : 1800 425 8665

www.boschindia.com
bpt@in.bosch.com